SERI/STR-231-3142
UC Category: 61
DE87001186

Economic Feasibility Study of an Acid Hydrolysis-Based Ethanol Plant

A Subcontract Report

Badger Engineers, Inc.
Cambridge, MA

April 1987

SERI Technical Monitor:
J. D. Wright

Prepared under Subcontract No. ZX-3-03096-2

Solar Energy Research Institute
A Division of Midwest Research Institute

1617 Cole Boulevard
Golden, Colorado 80401-3393

Prepared for the
U.S. Department of Energy
Contract No. DE-AC02-83CH10093

Table of Contents

Section 1.0	Executive Summary and Conclusions
Section 2.0	Technical Approach and Design Basis
Section 3.0	Process Considerations
Section 4.0	Process Description
Section 5.0	Economic Assessment
Section 6.0	Technology Assessment

Appendixes

Appendix I	References
Appendix II	Hydrolyzate Yeast Toxicity Trials Report
Appendix III	Dartmouth Reactor Extended Operation Trial
Appendix IV	Lignin/Tar Residue Separation Trials Report
Appendix V	Details of Risk Analysis Calculations
Appendix VI	Details of Economic Analysis Calculations
Appendix VII	General Estimating Procedures

List of Figures

Figure 1.1	Effect of Economic Parameters on IRR
Figure 3.1	Hydrolysis Reactor Design Specification
Figure 3.2	Hexose Yield as a Function of Reaction Time and Temperature (Experimental Results)
Figure 3.3	Furfural Yield as a Function of Temperature (Experimental Results)
Figure 5.1	Ethanol Selling Price Versus Feedstock Cost for 25 Million Gallon Plant (SERI Parameters)
Figure 5.2	Ethanol Selling Price Versus Capital Cost for 25 Million Gallon Plant (SERI Parameters)
Figure 5.3	Ethanol Selling Price Versus Feedstock Cost for 5 Million Gallon Plant (SERI Parameters)
Figure 5.4	Ethanol Selling Price Versus Capital Cost for 5 Million Gallon Plant (SERI Parameters)
Figure 5.5	Ethanol Selling Price Versus Feedstock Cost for 25 Million Gallon Plant (Badger Parameters)
Figure 5.6	Ethanol Selling Price Versus Capital Cost for 25 Million Gallon Plant (Badger Parameters)
Figure 5.7	Ethanol Selling Price Versus Feedstock Cost for 5 Million Gallon Plant (Badger Parameters)
Figure 5.8	Ethanol Selling Price Versus Capital Cost for 5 Million Gallon Plant (Badger Parameters)
Figure 5.9	Ethanol Selling Price Versus Furfural Price for 25 Million Gallon Plant (SERI and Badger Parameters)
Figure 5.10	Sensitivity of DCFIROR to SERI and Badger Economic Parameters for 25 Million Gallon Plant
Figure 6.1	Projected Furfural Market Versus Selling Price

List of Tables

Table 1.1	Summary of Design Cases
Table 1.2	Selling Price of Denatured Ethanol for the Four Design Cases
Table 2.1	Summary of Design Cases
Table 2.2	Composition of Wood Feedstock
Table 5.1	Wood Feedstock Price Data
Table 5.2	Components of Wood Feedstock Price
Table 5.3	Parameters for Parallel Economic Analyses
Table 5.4	Capital Costs of Four Design Cases
Table 5.5	Components of Capital Cost for Each Design Case
Table 5.6	Selling Price of Denatured Ethanol for the Four Design Cases
Table 5.7	Sensitivity Analysis for 25 Million Gallon Plant (SERI Parameters)
Table 5.8	Sensitivity Analysis for 5 Million Gallon Plant (SERI Parameters)
Table 5.9	Sensitivity Analysis for 25 Million Gallon Plant (Badger Parameters)
Table 5.10	Sensitivity Analysis for 5 Million Gallon Plant (Badger Parameters)
Table 5.11	Sensitivity Analysis for Furfural Price for 25 Million Gallon Plant (SERI and Badger Parameters)
Table 6.1	Likely Capital Cost Growth Risk Associated With Various Development Options
Table 6.2	Performance Shortfall Risk Associated With Various Development Options

EXECUTIVE SUMMARY AND CONCLUSIONS

This report presents the conceptual design and economic analysis of a process to convert lignocellulosic material, specifically mixed hardwood chips into fuel-grade ethanol. A key element of the technology is a novel plug flow reactor developed at Dartmouth College by Professors Grethlein and Converse in which dilute sulfuric acid is used in a continuous, short residence time, high temperature reactor to hydrolyse susceptible fractions in the feed. The products of the hydrolysis are fermentable sugars (hexose), pentose sugars, furfural, lignin residue, and a variety of minor organic constituents including hydroxymethyl-furfural (HMF); levulinic, acetic and formic acid; and terpenes and other extractives. The relative proportions of the products can be varied to some degree by adjusting reactor conditions. In the present study, reactor conditions have been specified which maximize the yield of fermentable sugars with furfural as the major process byproduct. The process also produces electric power in excess of its own requirements from the combustion of waste byproducts lignin and waste organics.

Two design capacities have been investigated, namely 25 million and 5 million gallons of ethanol per year. In addition, a second case representing an important design variation has been examined at each design capacity (Design Case II and Design Case IV). The resulting four cases are summarized in Table 1.1.

Table 1.1 Summary of Design Cases Studied

	Design Case	Design* Capacity MM Gallon Ethanol/Yr	Number Hydrolysis Stages	Wood Feed Rate Dry Metric Tons/Hour	Byproducts Furfural MM Lb/Yr	Byproducts Exported Electricity MW	Outside Utilities Required	Effluents
I	Base Case	25	1	73.8	130.2	22	No	Landfill, Boiler Flue, Cooling Tower**
II	Alternative Case	25	2	66	93.14	--***	No	Landfill, Boiler Flue, Cooling Tower
III	Small Scale Plant	5	1	14.8	26	4.4	No	Landfill, Boiler Flue, Cooling Tower
IV	Small Scale Plant	5	1	14.8	26	--	Electric Power 4.1 MW	Landfill, Boiler Flue, Cooling Tower

*Nominal design capacity: actual design capacity for 25 million gallon is 26.2 and for 5 million gallon is 5.24.

**Cooling tower refers to evaporation, drift, and blowdown.

***Electrical needs generated onsite.

25 million gallons ethanol per year has been adopted as the base case since this is foreseen as the nominal capacity of typical large scale plants that would be built once the uncertainties due to feedstock availability, technology, and byproduct utilization have been satisfactorily answered and the advantages of economy of scale can be taken. The 5 million gallon scale was investigated because this is the probable size of the first commercial plant.

Hydrolysis reactor scale-up considerations in progressing from the existing ½" diameter used at Dartmouth to the eventual 10" diameter for the large commercial scale plant have been addressed from the point of view of operating stability, heat transfer capacity, feed slurry handling, and yield of product.

Flexibility of location was an important consideration in the study since it is expected that this technology will be employed in more than one location. Thus, the base case plant has been designed to minimize environmental impact and to be essentially self-contained, generating all utilities onsite. Also, the capital cost estimate has been generated for a typical location in the Midwest.

An economic analysis has been carried out to determine, for each of the four design cases, the required ethanol selling price to yield a 15% discounted cash flow internal rate of return (IRR) after tax. Two parallel sets of calculations have been performed: one using economic assessment parameters requested by SERI and a second using parameters developed by Badger for this type of study. In addition, a calculation has been made on the SERI basis with a 25% IRR for the 5 million gallon plant (Design Case III) since a higher IRR than 15% may be required for the first commercial installation. The effect of the main economic parameters is shown in Figure 1.1.*

The economic analysis is extended, for Design Cases I and III, to calculation of the ethanol price sensitivity to feedstock price and capital cost. The sensitivity of ethanol price to furfural selling price is also calculated for base case (Design Case I).

*NOTE: An energy tax credit has been included in the Badger analysis of 10% of installed cost. This has the effect of reducing the ethanol selling price by 15¢ per gallon ($1.95 to $1.80) for the base case.

The technical risk involved in commercialization of the process based on the present level of development is analyzed and quantified, and possible process development strategies are assessed by a methodology developed by the Rand Corporation. Recommendations for future development are based on the results of the Rand Method. (Reference 30)

Conclusions

The major conclusions reached in the study are listed below:

(1) The process design presented is operationally feasible from an engineering viewpoint. However, a high level of risk of capital cost growth and of performance shortfall would be expected without a process demonstration phase and a site-specific cost analysis. These two exercises should result in a sufficient level of confidence to justify commitment of funds by an industrial producer.

(2) Recommendations for design and operation of the commercial-scale reactor have been made. These include measures to reduce the effects of tar pluggage, to ensure adequate heat transfer, and to facilitate pumping the high consistency wood slurry feed. These recommendations have been supported, where possible, by experimental work at Dartmouth College or Badger's Weymouth Laboratory.

Figure 1.1 Effect of Economic Parameters on IRR

FIG. 1.1

SENSITIVITY OF DCFIROR TO ECONOMIC PARAMETERS

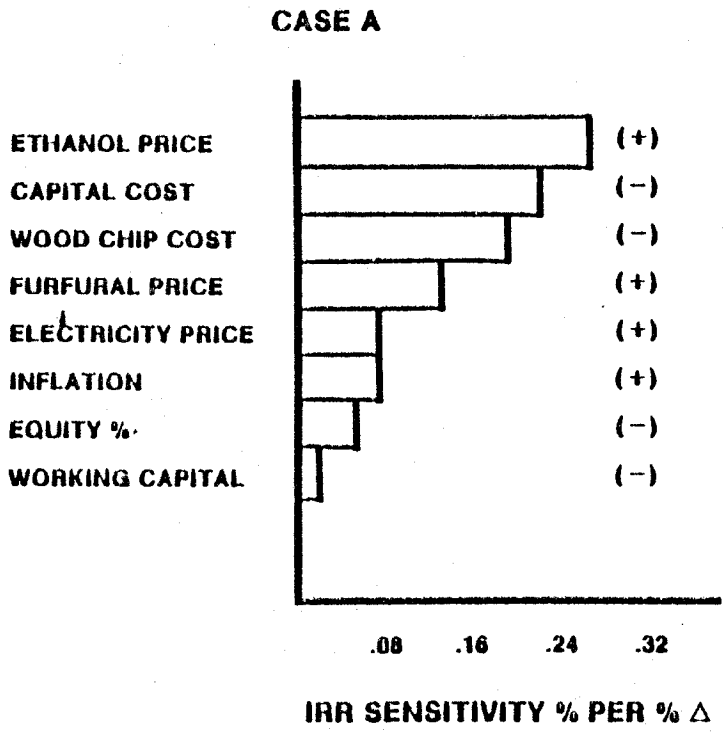

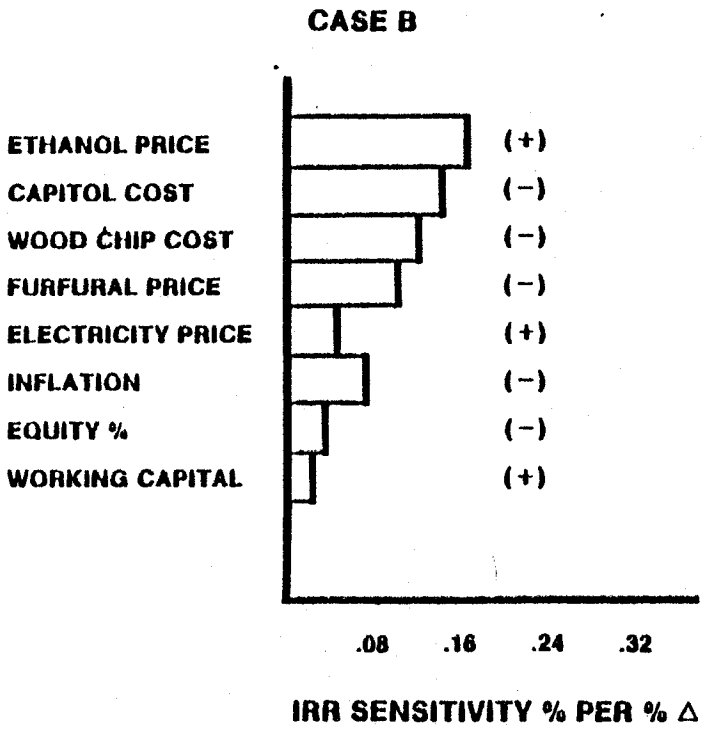

(3) Feedstock availability investigation reveals that sufficient quantities of waste wood from logging, lumber mill, and forest thinning operations would be available in most forested areas to supply a 25 million gallon plant. The scale of collection required is the same as that now being carried out by Burlington Electric Company for their McNeil wood-fired power plant. A conservative figure of $42 per dry metric ton has been used in the economic assessment based on information from wood chip brokers, large scale chip users, forestry consultants, and published literature.

(4) The market for fuel-grade ethanol is expected to grow to well over 1000 million gallons per year by 1990 primarily as a result of the increasing demand for gasoline blending components. Consequently, the market would experience little downward pressure on price as a result of the additional output from several 25 million gallon plants.

The question of the furfural market is not clear cut. Although furfural is a versatile chemical intermediate, its demand in the U.S. has been dropping in recent years as lower cost alternatives have eroded its traditional outlets. The introduction of the quantities of furfural produced by a 25 million gallon, acid-based, ethanol from wood plant would be expected to depress the price severely. As the price of furfural drops, however, its attractiveness as a chemical intermediate in the production of such commodity chemicals as adipic acid, maleic anhydride, ethylbenzene, and butanol increases.

Analysis of the potential market for furfural from published data (reference 10) shows that at 15¢ per pound a potential market of over 2 billion pounds per year and at 10¢ per pound a potential market of over 3 billion pounds per year exists. The above figures suggest that the combined ethanol and furfural markets have the potential to absorb the output of 15 to 20 large commercial scale plants.

The establishment of such major furfural markets will not occur overnight and could reasonably be expected to take 10 to 15 years to develop. However, future disruption of oil supplies with resultant increases in the prices of petrochemical feedstocks could accelerate this scenario.

(5) A market for electric power is assumed to exist under the Public Utilities Regulatory Policies Act (PURPA). The 25 million gallon plant would produce a total of 44.5 megawatts which is below the present PURPA maximum limit of 80 megawatts. The price assumed in the study for this byproduct is 5¢ per kilowatt hour.

(6) The commercial potential of the other organics produced has not been investigated in this study nor has credit been taken for them as products. However, these organics are concentrated in the process which facilitates recovery if warranted and technically feasible.

(7) The selling price of fuel grade ethanol calculated by SERI and Badger economic assessment parameters is given in Table 1.2.

The figures suggest that the technology looks attractive in the long term. Economic assistance may be necessary to introduce the technology in the short term at small commercial scale. However, economic analysis of the small commercial plant suggests that this might be an attractive venture should a cheap local source of feedstock be available.

Table 1.2

Selling Price of Denatured Ethanol for the Four Design Cases

		Ethanol Selling Price $ Per Gallon		
		SERI Parameters		Badger Parameters
	Design Case	15% IRR	25% IRR*	15% IRR
I	25 Million Gallon (Base)**	1.23		1.80
II	25 Million Gallon (Alternative)	1.65		2.23
III	5 Million Gallon***	1.42	2.15	2.83
IV	5 Million Gallon (Purchased Power)	1.63		2.85

*For rationale behind using 25% DCFIROR for 5 million gallon per year cases see Page 9, Section 5.

**Furfural Priced at ¢ 15/lb.

***Furfural Priced at ¢ 55/lb.

TECHNICAL APPROACH AND DESIGN BASIS

This report presents the conceptual design and economic analysis of a process to produce fuel-grade ethanol from mixed hardwood chips. The process technology is based on a novel plug flow acid hydrolysis reactor developed at Dartmouth College. This system uses a short residence time, high temperature, dilute acid reaction to hydrolyse the susceptible fractions in lignocellulose to hexose sugars, pentose sugars, furfural, and lignin residue. The proportion of each product is dependent on the reactor conditions used.

Four design cases are dealt with, covering two production capacities of 25 and 5 million gallons ethanol per year (Design Cases I and III); the 25 million gallon plant with a modified, two-stage wood hydrolysis reactor (Design Case II); and the 5 million gallon plant with purchased electric power (Design Case IV). The 25 million gallon scale has been used as the base case since this is foreseen as the typical large scale plant which will be built once uncertainties due to process technology, feedstock availability, and byproduct markets have been satisfactorily answered, allowing the advantages of economy of scale to be taken. The 5 million gallon plant has been designed and analyzed since this will be the most probable size of the first commercial plant.

A two stage hydrolysis reactor scheme was investigated since research and development work shows that higher yields of fermentable sugars can be obtained from such a scheme.

Finally, the cost-effectiveness of onsite electrical generation is determined for the 5 million gallon scale by investigating the economics of the plant using purchased rather than generated power.

The basic process has been split into the following units:

Unit 100	Feedstock Handling
Unit 200	Hydrolysis
Unit 300	Fermentation
Unit 400	Ethanol Purification
Unit 500	Furfural Recovery
Unit 600	Offsite Tankage
Unit 700	Waste Treatment
Unit 800	Utilities

A summary of the four design cases investigated is given in Table 2-1 on the following page.

Table 2.1 Summary of Design Cases

	Design Case	Design* Capacity MM Gallon Ethanol/Yr	Number Hydrolysis Stages	Wood Feed Rate Dry Metric Tons/Hour	Byproducts Furfural MM Lb/Yr	Byproducts Export Electricity MW	Outside Utilities Required	Effluents
I	Base Case	25	1	73.8	130.2	22	No	Landfill, Boiler Flue, Cooling Tower**
II	Alternative Case	25	2	66	93.14	--	No	Landfill, Boiler Flue, Cooling Tower
III	Small Scale Plant	5	1	14.8	26	4.4	No	Landfill, Boiler Flue, Cooling Tower
IV	Small Scale Plant	5	1	14.8	26	--	Electric Power 4.1 MM	Landfill, Boiler Flue, Cooling Tower

*Nominal design capacity, actual design capacity for 25 million gallon is 26.2 and for 5 million gallon is 5.24.

**Cooling tower refers to evaporation, drift and blowdown.

Heat and material balances for the base case process design as well as energy consumption by plant unit are provided at the end of this section for the base case plant.

In adopting 25 million gallons per year as the design basis for the large scale plant, a number of factors were considered. Most importantly, it was felt that the establishment of a wood supply infrastructure to support such an output is feasible in most of the forested areas of the country.

In point of fact, the wood supply requirement for a 25 million gallon per year plant (1772 dry metric tons per day) is similar in size and scope to existing commercial wood-gathering efforts employed at the wood-fired power plant operated by Burlington Electric Company of Burlington, Vermont.

Most commercial fermentation ethanol plants built today have capacities in the 50-60 mm gallon per year range. It was our first thought to select a capacity in that range for this study. However, the logistics of wood gathering for such a large plant limits the number of siting options available. Rather than let site-specific issues outweigh the general technical and economic conclusions of the study, it was decided to design a capacity where one could point to an existing wood-gathering system as a basis for costs. This maintains the intended focus of the study on the economic feasibility of the technology. It is intended in this way to make the study as generally applicable as possible since it is anticipated that plants will be operated in more than one location.

The process has been designed in this study to use mixed hardwood as a feed for two reasons. Firstly, this is the predominant waste wood in many areas and, secondly, much of the development at Dartmouth College has been carried out using mixed hardwood flour.

Softwood has been shown to be a suitable feedstock without process modification, however, the relative yields of sugars and furfural would be expected to change, resulting in more fermentable sugar and less furfural than with hardwoods.

Minor modifications to the process would allow use of lignocellulosics such as sugar cane bagasse, corn stover, etc., as well as cellulosic domestic garbage. (No sufficient furfural production would be expected with domestic garbage.)

The same reasoning that lead us to a conservative basis for plant capacity also lead us to the following additional general criteria of approach:

(1) To minimize environmental impact such as water requirements, land area, access requirements and solid, liquid, and gaseous effluents discharge. The large plant (25 million gallon) has a water requirement of 1700 gallons per minute due to the fact that waste products are limited to landfill (gypsum, ash and tar solids), boiler flue gas, and cooling tower vapor and blowdown.

(2) To maximize the flexibility of plant location. The plant has been designed with enough flexibility to allow it to operate in a number of likely locations. The capital and operating costs have been developed for a typical Midwest location. It is intended in this way to make the study as general and widely applicable as possible.

(3) To specify equipment with the exception of the hydrolysis reactor itself, which is commercially available. Where there has been uncertainty as to the equipment application, representative samples of process material have been obtained, vendor discussions held, and equipment trials conducted where possible. In these cases, the equipment designs have been based on vendors' recommendations and specifications.

(4) To use a scale of reactor not too different from that which will have been used in preceeding development. (Dartmouth experiments have been carried out with a ½" diameter reactor. The planned scaled-up reactor at SERI will be around 1-2" in diameter and a small demonstration plant would have a reactor 3-4" 1.1 diameter. The diameters chosen for the commercial scales, i.e. 5 and 25 million gallon, have been tentatively set at 6" and 10" respectively.

(5) To use a level of process integration which allows major energy savings without significantly affecting process flexibility.

(6) "To control the water balance," i.e., to limit the quantity of water or steam added to the process for reasons such as dilution, washing, and heating. The energy required to remove and recycle water represents a major loss of process energy efficiency and, thus, lost revenues.

(7) To define as closely as possible all extraneous organics produced. This enables determination of their effect on physical properties of mixtures, energy and material balances, and separation equipment necessary. The data and calculations may also serve as a guide for future studies into the economics of their separation and purification. Hydrolysate fermentability considerations also dictate that potentially toxic components be identified and their level minimized or the yeast culture adapted.

(8) To attempt to design the plant to be essentially self-sufficient in its energy requirements by using wood hydrolysis residues to produce the required steam for the process. To maximize the energy cycle efficiency, consideration was given to the co-generation of electric power. Electricity is co-generated at both scales, and excess electricity is exported to the local utility under the provisions of the PURPA Act. The fourth design case of a 5 million gallon plant with purchased electricity is presented for comparison.

(9) To design the plant so that a variety of lignocellulosic feeds, such as bagasse and agricultural residues, can be used with only minor variations to the equipment. The design of the basic process is based on mixed hardwood chips as a feed for two reasons: firstly, this is the predominant waste wood in many areas and, secondly, much of the development at Dartmouth College has been carried out using mixed hardwood. Softwood should be just as suitable a feed for the process; however, the relative yields of fermentable sugar and furfural would be expected to change, giving increased fermentable sugars and decreased furfural.

Basis for Design Cases

Design Case I (Base Case)

25 Million Gallons Ethanol per Year

The base case plant is designed to produce fuel-grade ethanol from hardwood chips using a single stage hydrolysis reaction. The nominal capacity of the plant was set at 25 million gallons fuel grade ethanol per year. However, the actual design capacity is, in fact, 26.2 million gallons per year. (The increased production rate is due to slightly better fermentation and recovery yields than anticipated in preliminary calculations.)

The ethanol is sold denatured by the addition of 5 volume percent gasoline. The denatured ethanol production rate is 27.5 million gallons per year.

The wood chip feedstock will be used at an average rate of 73.8 metric tons (dry matter) per hour (590400 metric tons per year). The average bone-dry composition of the feedstock for the purposes of the study was taken as in Table 2.2 (Reference 1).

Table 2.2 Composition of Wood Feedstock

Component	% By Weight
Glucan	42.0
Mannan (Hexan Polymer)	3.22
Galactan	0.98
Xylan (Pentosan Polymer)	21.14
Arabian (Pentosan Polymer)	2.85
Lignin + Uronic Acid + Acetyl	25.34
Extractives*	4.12
Ash	0.35
	100% (Dry Basis)

*Extractives are characterized as alpha pinene and oleic acid.

Overall Process Yields

Ethanol Yield

The yield of fermentable sugars in the hydrolysis reaction assumed as the basis for design was 55% fermentable sugars on "potential hexose" in the hydrolysis reactor feed. Potential hexose in the feed is calculated as

hexan polymer x 1.111

Potential hexose represents the maximum theoretical yield of fermentable sugars.

The overall recovery of sugars from the hydrolysis unit was calculated as 98.56%.

The fermentation yield of ethanol from sugars was 95% of theoretical. (Theoretical fermentation yield is 51.1%.) The ethanol recovery yield was calculated as 99.5%.

The above yield assumption and feedstock composition corresponds to an overall process yield of 44.3 gallons of undenatured fuel-grade ethanol per dry metric ton of wood.

This is calculated thus:

$$\frac{\text{pounds}}{\text{metric ton}} \times \text{fraction hexose} \times \text{hydrolysis yield} \times \text{sugar recovery yield} \times \text{fermentation yield} \times \text{ethanol recovery yield} \div \frac{\text{pounds ethanol}}{\text{gallon}}$$

or:

$$(2205) \times 0.462 \times 1.11 \times 0.55 \times 0.9856 \times 0.95 \times 0.511 \times 0.995 \div 6.61 = 44.32$$

Since gasoline is added at 5% by volume as a denatureant the yield of denatured ethanol is:

44.32 x 1.05 = 46.5 Gallons/Metric Ton

The calculated product fuel grade ethanol composition is:

Component	% By Weight
Ethanol	99.5
Acetaldehyde	0.412
Acetone	0.028
MEK	0.021
Butyraldehyde	0.034
n Propanol	0.005
	100%

Furfural Yield

A major byproduct of the process is chemical grade furfural which is produced at the rate of 130.2 million pounds per year as commercial grade furfural. The basis for this furfural production rate was an assumed furfural yield in hydrolysis of 60% of theoretical. Hydrolysis furfural yield is therefore calculated for Design Case I as:

$$\frac{\text{pounds}}{\text{metric ton}} \times \frac{\text{fraction pentosan}}{\text{polymer}} \times \frac{\text{molec weight pentose}}{\text{molec weight polymer}} \times \frac{\text{molec weight furfural}}{\text{molec weight pentose}} \times \frac{\text{fraction}}{\text{yield}}$$

or:

$$2205 \times 0.2399 \times 150/132 \times 96/150 \times 0.6 = 231 \text{ pounds/metric ton}$$

At the reactor conditions chosen in Design Case I, complete conversion of the pentose sugars to furfural and degredation products takes place.

Recovery of furfural from the hydrolysis unit is 96%.
Recovery of furfural from the furfural recovery unit is 99%.
Furfural production is therefore:

231 x 0.96 x 0.99 = 219.5 pounds/metric ton of wood

Furfural is sold as commercial grade containing 0.5% water.

Electricity

A second major plant byproduct is excess electrical power which is exported at a rate of 22 MW.

The plant is designed to generate all of its own utilities.

The plant stream factor is 8,000 hours per year.

The plant is designed to produce no process liquid effluents under normal operation. Environmental emissions are limited to gypsum, boiler ash, and waste treatment sludges for landfill, boiler combustion gases, and cooling tower water vapor and blowdown.

Design Case II (Alternative Case)

25 Million Gallons per Year - Two Stage Hydrolysis Reaction

The alternative case plant is designed to produce fuel grade ethanol from hardwood chips using a two-stage hydrolysis reaction. The ethanol capacity and product analysis is the same as for the base case (27.5 MM Gal Denatured Ethanol). The wood chip feed requirement is 66 metric tons (dry matter) per hour with the same average chemical composition as for the base case. The alternative case design produces byproduct furfural at the rate of 93.14 million pounds per year as commercial grade furfural. The alternative case plant does not export electricity although, like the base case, it generates all of its own utilities. As with the base case, the only effluents are ash, landfill sludges, boiler stack gases, and cooling tower water vapor and blowdown.

The design of the alternative case process is based on a yield of fermentable sugars of 50% of potential hexose converted in the first stage hydrolysis and 55% of the remaining potential hexose in the second stage. This gives a hydrolysis yield of 66.5% fermentable sugars and an overall plant yield of 49.6 U.S. gallons undenatured ethanol per dry metric ton.

At the conditions chosen for Design Case II, only 43% of the potential pentose sugars are converted to furfural.

Design Case III (Reduced Capacity Plant)

5 Million Gallons Ethanol per Year - Onsite Power Generation

A reduced capacity plant has also been designed to produce 5 million gallons, nominal, (5.24 million gallons, design) per year. This is a scaled-down version of the large base case plant except that the reduced scale does not require parallel process units in the hydrolysis section.

The ethanol is sold denatured by addition of 5 volume percent gasoline. The denatured ethanol production rate is 5.5 MM gal/yr.

This plant uses 14.76 metric tons of wood chips per hour (118100 metric tons per year).

The production rate of byproducts is: Furfural 26 million pounds per year and electricity 4.4 MW.

As with Design Case I, at the reactor condition chosen, complete conversion of the pentose sugars to furfural and other degredation products takes place.

Design Case IV (Reduced Capacity Plant)

5 Million Gallons per Year with Purchased Electric Power

A reduced capacity plant has also been designed to produce 5 million gallons ethanol per year, nominal, (5.24 million gallons, actual). This is the same plant as Design Case III except that facilities for power generation have been omitted and electric power is purchased. This allows investigation of the cost-effectiveness of onsite power generation. The plant uses 14.76 metric tons of wood chips per hour (118100 metric tons per year). Demand rate of electricity is 4.1 MW.

Completing this section are the material and energy balances for the base case 25 million gallon per year plant (Design Case I). On the following page is the overall material balance. This is followed by a drawing presenting the material balances for each unit. The overall energy balance is then presented followed, in turn, by a unit by unit summary of energy consumptions.

Heat and material balances have been presented for Design Case I only. The differences between that case and the others have been described elsewhere in this section.

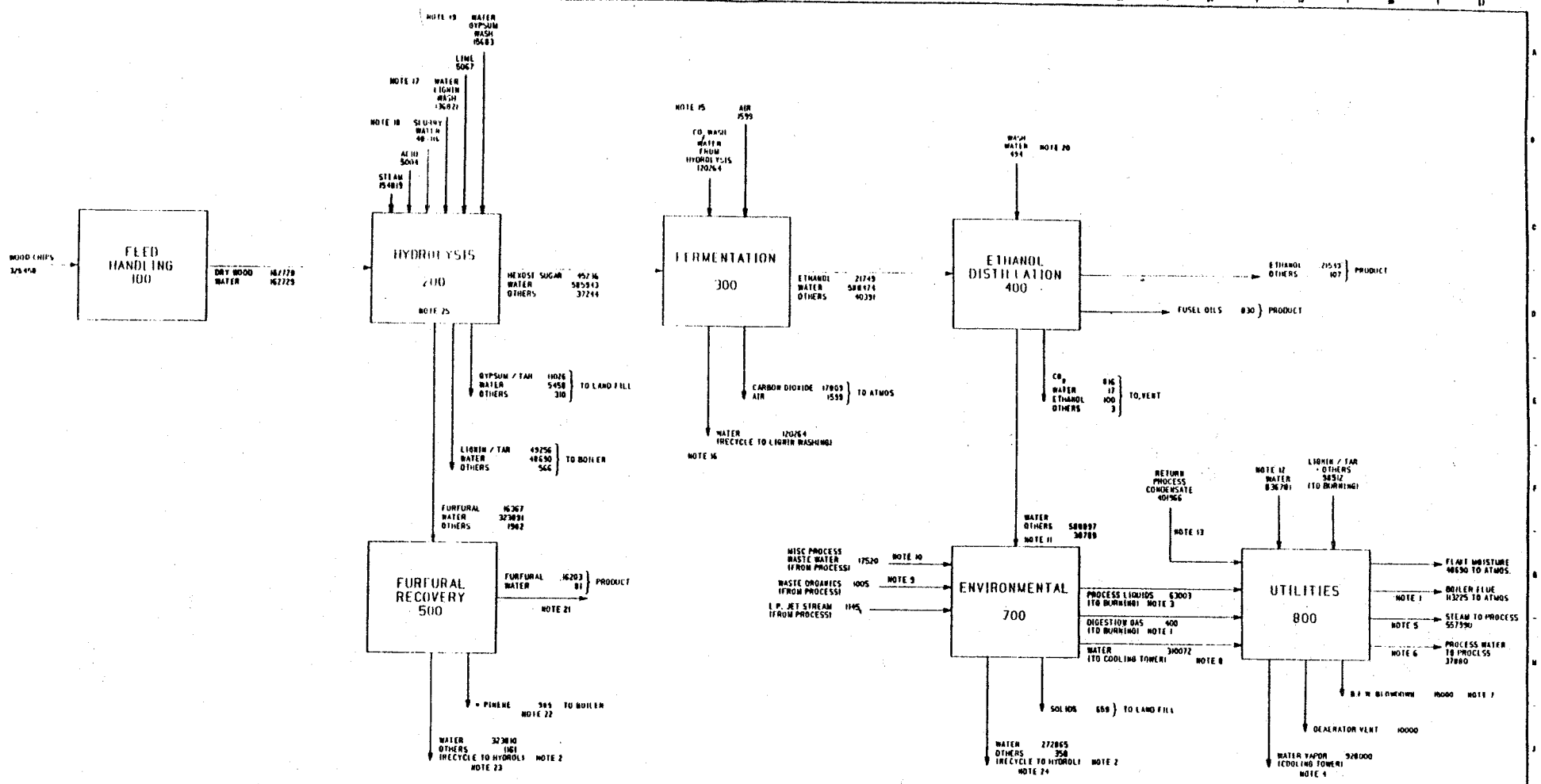

PROCESS INPUTS

WOOD	162929	
WATER	1002030	NOTE 14
ACID	5004	
LIME	5067	
AIR	1898	
	1176424	

PROCESS OUTPUTS

ETHANOL	21656
FURFURAL	16284
FUSEL OILS	830
LAND FILL	17453
FLUE & VENTS	192208
COOLING TOWER	928000
	1176429

BADGER ENGINEERS, INC.

MATERIAL BALANCE

SOLAR ENERGY RESEARCH INSTITUTE

SCALE: NONE

DWG. NO. E0461-106-24

BASE CASE 25MM GAL/YEAR

NOTES FOR MATERIAL BALANCE: (Flow Sheet 106-24)

1. Boiler flue accounts only for fuels mass and does not include combustion air.

2. "Others" in recycle to MT-223 (Section 200) is counted as water.

3. Process liquids from stillage evaporation.

4. Cooling tower includes evaporation drift and blowdown.

5. Steam to process is sum of streams 801, 802, and 803 on flowsheet 106-18.

6. Fresh process water to process from ring main (37880 lb/hr) comprises gypsum washwater (15683 lb/hr) lignin wash (16557 lb/h), water make-up to MT-223, (5186 lb/h), and fusel oil wash (494 lb/h).

7. Boiler feedwater blowdown (15000 lb/h) goes to unit 700.

8. Water to cooling tower (310072 lb/hr) is from anaerobic/aerobic treatment. This is composed of steam 702 (290598 lb/h) plus BFW blowdown (15000 lb/h) plus molecular sieve runoff (1954 lb/hr) plus flume washings (2520 lb/h). This is approximately 33% of total water make-up to cooling tower.

9. Waste organics include alpha pinene (985 lb/h) and organics in flume washings (20 lb/h).

10. Miscellaneous process water is: Boiler feed water blowdown (15000 lb/h) plus flume washings (2520 lb/h).

11. Water from unit 400 is beer column bottoms (586943 lb/h) plus molec sieve runoff (1954 lb/h).

12. Total water make-up to process (836781 lb/h) is boiler make-up (180964 lb/hr) plus cooling tower make-up (617928 lb/h) plus water to Lignin washing (16557 lb/h) plus water to gypsum washing (15683 lb/h) plus water to fused oil washing (454 lb/h) plus MT-223 make-up water (5186 lb/h).

13. Return process condensate is streams 806 + 802 + 805 on flowsheet 106 - 18.

14. Total water to process (1002030 lb/h) is: Total make-up water (836781 lb/h) plus wood moisture (162729 lb/h) plus flume washings (2520 lb/h).

15. Wash water for CO_2 is from MT 223 (120264 lb/h).

16. Washings from CO_2 scrubber (120264 lb/h) are sent to lignin washing.

17. Lignin wash water (136821 lb/h) is CO_2 washings from unit 300 (120264 lb/h) plus fresh process water from ring main (16557 lb/h).

18. Slurry water to hydrolysis (483116 lb/h) is from MT 223.

19. Gypsum wash water (15683 lb/h) is fresh process water from ring main.

20. Fusel oil wash water.

21. Stream 506 from furfural recovery to product storage.

22. Stream 507 from furfural recovery to MT-702 (Drawing 106-14).

23. Furfural azeotrope column bottoms (324971 lb/h) to MT-223.

24. Condensate from evaporator (273223 lb/h) recycled to MT-223.

25. MT-223 (Hydrolysis process water tank) mass balance is:

Inputs: 273223 lb/hr from unit 700 + 324971 lb/h from unit 500 + 5186 lb/hr fresh make-up from ring main.

Outputs: 120264 lb/h to CO_2 scrubber + 483116 lb/hr hydrolysis slurry water.

Overall Material Balance

(Design Case I)

Inputs			Outputs	
Item	Flow Lb/Hr	P	Item	Flow Lb/Hr
Wood	162,729	R	Ethanol	21,656
Water	1,002,030	O	Furfural	16,284
Acid	5,004	C	Fusel Oils	830
Lime	5,067	E	Landfill*	17,453
Air	1,599	S	Flue/Vents**	192,206
Total	1,176,429	S	Cooling Tower***	928,000
			Total	1,176,429

*This item includes gypsum, boiler ash, waste treatment sludges, and tars.

**This item does not include combustion air.

***This item includes entrainment allowance and blowdown.

Overall Energy Balance

(Design Case I)

Inputs			Outputs	
Item	Heat Value MM Btu/Hr		Item	Heat Value MM Btu/Hr
Wood	1,425	P	Ethanol	252
Process Water	48	R	Furfural	165
Misc. Chemicals	55	O	Fusel Oils	8
Total	1,528	C	Electricity	75
		E	Flue and Vents	179
		S	Cooling Tower	834
		S	Landfill	15
			Total	1,528

*Heat value is given as lower heating value

$$\text{Thermal Efficiency} = \frac{\text{Heating Value of Useful Products}}{\text{Total Heat Inputs}} = \frac{500}{1,528} = 32.7\%$$

Energy Consumption by Unit

(Design Case I)

	Unit	Electrical Energy MM Btu per Hour	Steam Energy MM Btu per Hour
100	Feedstock Handling	0.5	2.0
200	Hydrolysis*	34.0	257.0
300	Fermentation	2.0	5.0
400	Ethanol Purification	9.5	42.0
500	Furfural Recovery	0.3	75.0
600	Offsite Tankage	0.8	-
700	Waste Treatment	0.6	182.0
800	Utilities	17.0	11.0
	Miscellaneous (Lighting, Winterization, etc.)	4.0	11.0

*Includes size reduction of wood particles.

BOILER - TURBOGENERATOR HEAT BALANCE

Boiler Fuels

Item	Mat. Bal. Stream Number	Feedrate lb/Hr	Heat of Combustion Btu/lb	Heat Content MM Btu/Hr
Dry Lignin/Tar	222	49800	12000	598
Evaporator Liquids	704	63003	6600*	416
Fusel Oils	406	830	11000	9
Digester Gas	-	-	-	4
			Total	1027

*Contains 39% Water

Steam Raised

Boiler Efficiency 85%

Feedwater Temperature 240°F

Steam Produced: 715000 lb/Hr at 1100 PSIA, 874°F

Process Steam Required: 192890 lb/Hr at 1100 PSIA
20500 lb/Hr at 150 PSIG
344600 lb/Hr at 50 PSIG

Electricity Generated at Turbine Efficiency of 78%

Exit Steam Level	Actual Water Rate lb/MW Hr	Steam Rate lb/Hr	Actual Power Generated MW
Condensing Steam	8500	157010	18.5
150 PSIG Steam	20792	20500	0.9
50 PSIG Steam	15250	344600	22.6
Total Electricity Generated			42.0
Process Electricity Required (MW)			20
Export Electricity (MW)			22

PROCESS CONSIDERATIONS

Introduction

This section details the rationale used in establishing the sequence of unit operations for each process unit. In each instance the base case is discussed and followed, where applicable, by a discussion of the differences between the base case and the alternative cases. Scale-up considerations for the hydrolysis reactor itself are also discussed.

The source materials upon which the design is based are varied and include the following:

(1) Experimental work carried out at Dartmouth College, Badger's Weymouth Laboratory, JGC (Japan), and equipment vendors' laboratories.

(2) Consultation with Professors Grethlein and Converse, developers of the hydrolysis reactor at Dartmouth College.

(3) Consultation with Badger engineering design specialists.

(4) Literature survey.

(5) Discussions with engineers at SERI.

(6) Documents obtained from SERI engineers.

(7) Badger in-house data.

(8) Consultation with forestry experts of the Burlington Electric Company, Burlington, Vermont.

Unit 100 - Feedstock Handling and Storage

The feedstock handling and storage area consists of rail and truck offloading facilities, a chip flume, chip storage, and front loaders and conveyors for feeding the wood chips to the process. It is anticipated that most of the feed-stock will be delivered by railcar in order to minimize local trucking nuisance. It is, planned, however, to receive 5 to 10% of the feedstock directly by truck.

A flume pond has been included in the design both to wash the chips and to allow separation of large, heavy, tramp material such as soil, rocks, and metal items.

The chip pile has been sized to allow two weeks chip storage. The use of rail delivery also permits extra storage at remote rail loading heads. Delivery to these intermediate collection points will be by truck.

The chip pile will be managed by two front-end loaders, one for pile management and one for feeding the process. The loader used for pile management acts as a spare for the process feed loader. This has worked very well at both the Moran and McNeil wood burning power plants of the Burlington Electric Company of Burlington, Vermont. Management of the chip pile will be on a first in, first fed handling policy. This plus a twice a year turnover of the chip pile has proven effective in reducing microbial degradation and minimizing the risk of spontaneous combustion at both Burlington Electric plants.

Unit 200 - Hydrolysis

Hydrolysis Reaction

The hydrolysis reaction is the key step in the process and represents the major deviation from existing process technology; it thus represents the major uncertainty in the process. (For further discussion and quantification of the technical risks see Section 6.0.) It has therefore been discussed below in considerable detail.

Other unit operations comprising the hydrolysis unit are also described and discussed in the following pages.

The hydrolysis reactor is a short residence time, high temperature plug flow reactor based on that developed at Dartmouth College (Reference 1). The reactor is designed to hydrolyse lignocellulosic materials fed as aqueous acidic slurries. The slurry feed is heated by high pressure steam injection as it enters the reactor. The major hydrolysis products are normally hexose sugars, furfural, hydroxymethyl furfural (HMF), tars, and lignin residue with a variety of minor organic constituents. Yield figures used in the study have been based directly on earlier figures obtained during operation of the Dartmouth reactor (Reference 1 and 2). Yield figures used are 55% hexose sugars (on potential hexose) and 60% of theoretical for furfural. Results obtained from later experiments performed under subcontract during the present study suggest that the above yield assumptions are conservative.

Other extraneous organics produced by wood hydrolysis are extractives and tall oils characterized by terpenes (alpha-pinene) and oleic acid, respectively; acetic acid from acetyl; and formic acid and levulinic acid from partial HMF breakdown.

A program to test a scaled-up version of the Dartmouth reactor is underway at the SERI research facility in Golden, Colorado. Data from this is not expected however until sometime in mid-1985.

Reactor Scale-up Considerations

(1) Reactor Dimensions

The commercial-scale reactor diameter has been tentatively set at 10" for the 25 million gallon plant and 6" for the 5 million gallon plant. This is based on the premise that preceeding development stages will be carried out on reactors of increasing diameter. The Dartmouth work has been conducted on a reactor of ½" diameter. The interim stages of development are anticipated to be, firstly, the planned reactor at the SERI laboratories and, secondly, an integrated demonstration process. The reactor sizes in these two intermediate developments should be 1" to 2" for the SERI work and 2" to 3" for the demonstration plant.

A tentative reactor specification is given in figure 3.1. This shows the approximate dimensions required for the reactor at various stages of development.

Figure 3.1 Hydrolysis Reactor Specifications

TO BADGER AMERICA, INC OR ITS AFFILIATED COMPANIES AND SHALL BE USED ONLY FOR THE PURPOSE FOR WHICH IT WAS SUPPLIED. IT SHALL NOT BE COPIED, REPRODUCED OR OTHERWISE USED, NOR SHALL SUCH INFORMATION BE FURNISHED IN WHOLE OR IN PART TO OTHERS, EXCEPT IN ACCORDANCE WITH THE TERMS OF ANY AGREEMENT UNDER WHICH IT WAS SUPPLIED OR WITH THE PRIOR WRITTEN CONSENT OF BADGER AMERICA, INC. AND SHALL BE RETURNED UPON REQUEST

FIGURE 3.1

HYDROLYSIS REACTOR SPECIFICATION

REACTOR DIMENSIONS (INCHES)

DEVELOPMENT STAGE	NOTE	D_1	D_2	L_1	L_2
DARTMOUTH	1	0.5	0.5	7.5	SEE NOTE 5
S.E.R.I.	2	1	2	10	
1 MM GAL		2-3	7	30	
5 MM GAL		6	12	43	
25 MM GAL	3	10	15	48	

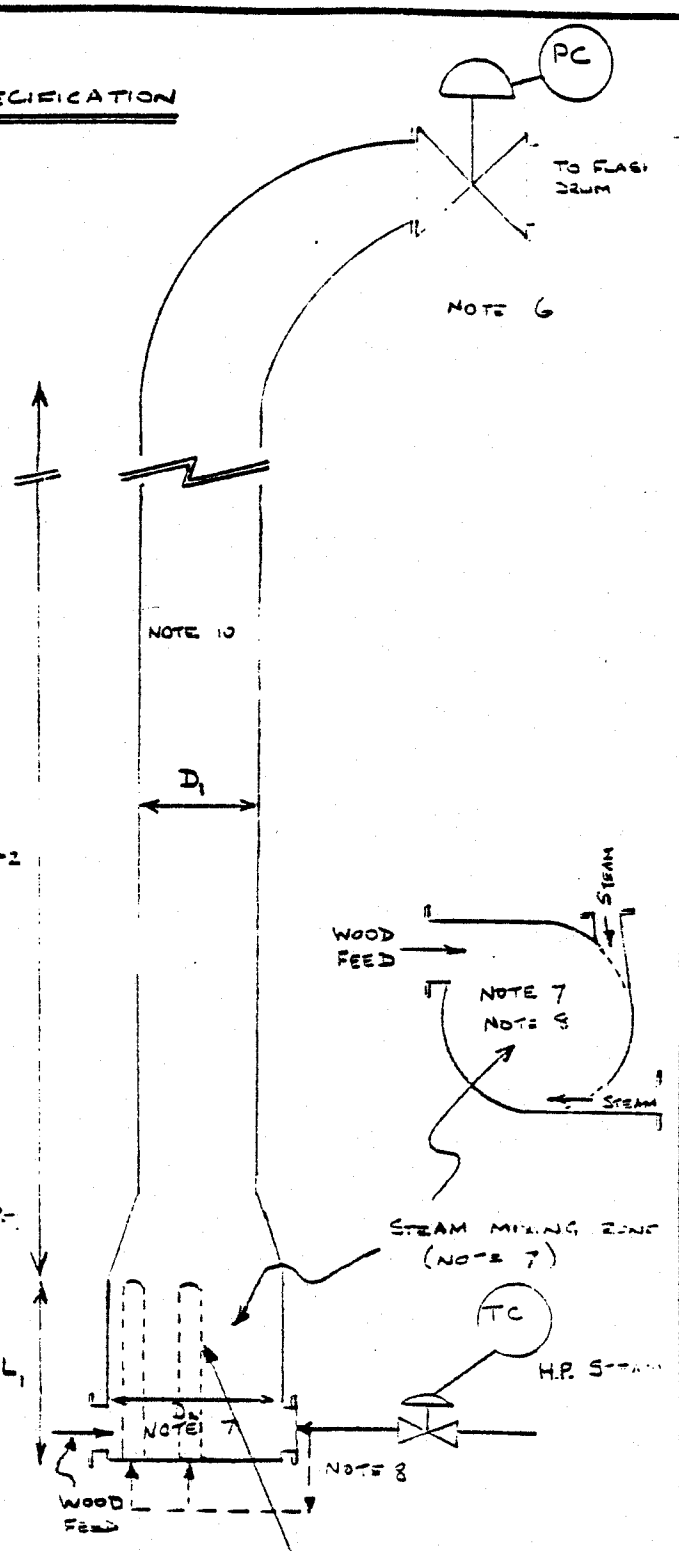

NOTES:

1. DARTMOUTH BENCH-SCALE REACTOR IN OPERATION
2. S.E.R.I. REACTOR UNDER CONSTRUCTION
3. 25 MM GAL. PLANT HAS TWO REACTORS
4. MATERIALS OF CONSTRUCTION: ZIRCONIUM-LINED MILD STEEL OR TEFLON-LINED MILD STEEL FOR TEMP. < 500°F.
5. REACTOR LENGTH FROM STEAM MIXER TO OUTLET VALVE DEPENDS ON DESIRED RESIDENCE TIME.
6. DARTMOUTH USES EXIT ORIFICE. LARGER REACTORS SHOULD USE PRESSURE CONTROL VALVE IN OUTLET.
7. TANGENTIAL STEAM AND SLURRY INLET (SEE DIAGRAM INSET)
8. MULTIPLE STEAM INJECTION PORTS WITH 0.04" - 0.08" PERFORATIONS (SEE INSET)
9. DESIGN PRESSURE: 1200 PSIG / FULL VAC.; DESIGN TEMPERATURE 750°F (ZIRCONIUM LINED)
10. REACTOR TUBE SHOULD BE CLEAN AND FREE FROM ANY OBSTRUCTIONS WHICH COULD CAUSE BLOCKAGE.

ISSUE	DESCRIPTION	CHK'D	APP'D	CLIENT

BADGER AMERICA, INC. A Raytheon Company

ISSUE	DATE	SHEET OF	

EE(1) -3-3 9-71

The required residence time determines the reactor length. In the commercial scale reactor a residence time of 5.5 seconds based on reaction kinetics demonstrated at Dartmouth has been assumed. This equates to a reactor length of 27.5 feet with a reactor velocity of 5 feet per second. If a greater residence time is shown to be necessary this can be accommodated by increase of the reactor length.

(2) Tar Deposition and Blockage

In hydrolysis trials of extended duration (2 hours) carried out at Dartmouth during the present study blockage due to tar laydown was found to be a major problem. The exact cause of tar deposition is unknown, however, it is believed to be the product of furfural degredation and interactions between furfural, xylose, HMF glucose and dissolved lignin. The large scale reactor has been designed to reduce this problem by increasing the reactor velocity to 5 feet per second. Results from the extended duration trials at Dartmouth suggest that increased velocity reduces tar laydown in the reactor (Reference 8). Furthermore, exit orifice blocking experienced by Dartmouth at small scale with the 1 mm orifice should much less marked on the large scale where the reactor exit control valve is much larger. In addition, the large scale process has been designed with two parallel reactors and an installed spare to maintain continuous operation should it prove necessary to shut off one of the reactors on a regular basis to clear out excessive tar deposition. It may also be possible to construct the reactor outlet lines with teflon lined mild steel for temperatures up to 500°F. If this were allowable, teflon would reduce adhesion of tarry solids.

Excessive unreacted cellulosic solids in the reactor effluent may also contribute to blockage by adhering to any tar present on surfaces.

(3) Mixing and Heat Transfer

In scaling up the hydrolysis reactor care must be taken to address the poor mixing and heat transfer problems encountered by the Dartmouth researchers. During the experiments at Dartmouth, the reactor proved difficult to control and this can be attributed in part to the presence of steam vapor. Consequently, a reactor operating pressure has been chosen which corresponds to an equilibrium temperature 36°F higher than the chosen reactor temperature. This will give substantial temperature difference for condensation. Previous work on vapor condensation (Reference 12) indicates that this temperature difference causes complete collapse of an injected steam bubble within 0.5 seconds. This should result in improved control over reactor residence time and temperature due to elimination of steam vapor from the reactor and increased heat transfer rate. The larger diameter reactor will also afford a longer path of travel for injected steam bubbles before they reach the center of the reactor tube. This effectively gives steam a longer time for condensation. The above measures should also eliminate the possibility of steam-hammer sometimes experienced in this type of equipment.

Control should also be improved by the higher reactor velocity. The chosen velocity of 5 feet per second will give more uniform mixing in the reactor than obtained at Dartmouth where the velocity was around 0.25-0.7 feet per second. In addition, a tangential steam inlet as used at Dartmouth in recent work will be used for the large scale reactor to improve mixing. (See Figure 3.1). Consideration should also be given to use of a "lance" type axial injectors for further improvement to steam mixing.

The volume of the mixing chamber in the hydrolysis reactor has been calculated on the basis of published heat transfer measurements on steam injection mixers. These indicated a typical heat transfer coefficient of 0.4×10^6 BTU per hour °F cubic foot suggesting a mixing chamber volume of 7 cubic feet (15" diameter x 4 feet long) for the base case design (Reference 27). This is supported by a second heat transfer calculation based on the length and number of heat transfer units for steam desuperheating and condensing, giving a required mixing chamber length of 3.1 feet for a diameter of 15" (Reference 31). A major scale-up issue will center around the reactor mixing tee heat transfer capacity.

(4) Reactor Operating Conditions

Choice of the reactor operating conditions residence time, temperature and acidity are based on operating data and reaction kinetics demonstrated experimentally at Dartmouth College. These kinetics show a trend towards higher fermentable sugar yield at higher temperature and shorter residence time. Higher temperatures also give increased conversion of xylose to furfural. This is shown in Figures 3.2 and 3.3 which are based on experimental data from the Dartmouth College (Reference 1).

The reactor operating conditions selected as a design basis are as follow:

Temperature	509°F = 265°C
Pressure	985 psig
Acidity	0.6% Sulphuric Acid
Residence Time	5.5 Seconds (Excluding Mixing Tee and Exit Piping)

A high degree of operating flexibility has been incorporated into the design.* However, reactor optimisation is beyond the scope of this study since it depends on a number of considerations which can only be determined during actual operation. These include not merely maximising hexose yield but also:*

- Reactor Stability to Blockage by tar and polymer deposition.
- Reactor Stability to unreacted cellulosic solids in the effluent which may cause blockage.*
- Furfural or other byproduct yields.
- Wood feed particle size.
- Available steam pressure.
- Acid and lime costs.
- Formation of difficult-to-separate extraneous organics which may be inhibitory to the yeast fermentation.

*Reactor conditions can easily be varied to minimize unreacted effluent cellulose. For example at 509°F, 1% acid and 5.5 records residence time, Dartmouth kinetics (Reference 1, pg 140) predict only 3.7% of the feed cellulose remains unconverted. Unreacted cellulose has been taken to be zero in the process material balance. Furthermore, under these conditions the yield of fermentable sugars obtained by Dartmouth is over 55% (figure 3.2). (Reactor optimisation during future development may, in fact, show that the 0.6% acid concentration used in the present design needs to be increased.)

Figure 3.2

Hydrolysis of Hardwood to Glucose as a Function of Reaction Time and Temperature (Experimental Data)

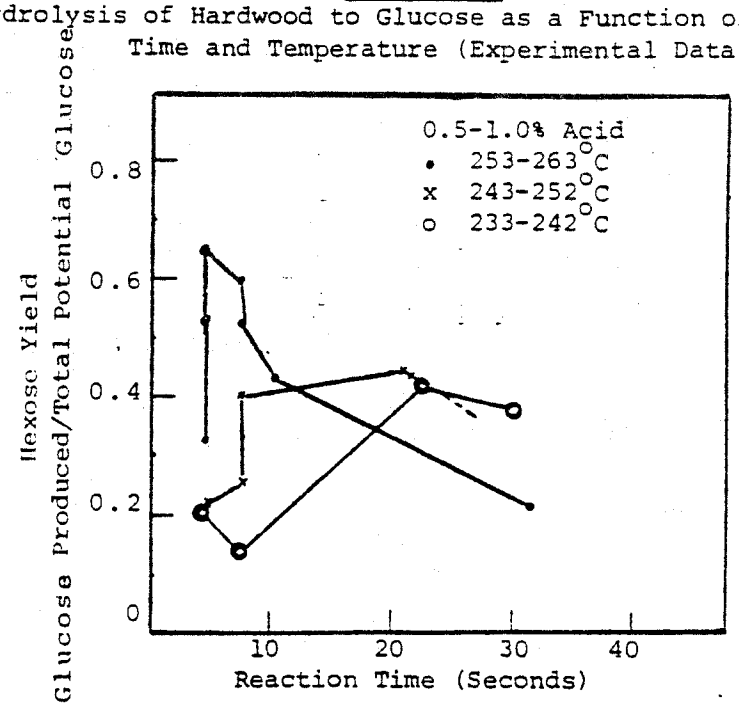

Figure 3.3

Furfural Yield from Hardwood as a Function of Temperature (Experimental Data)

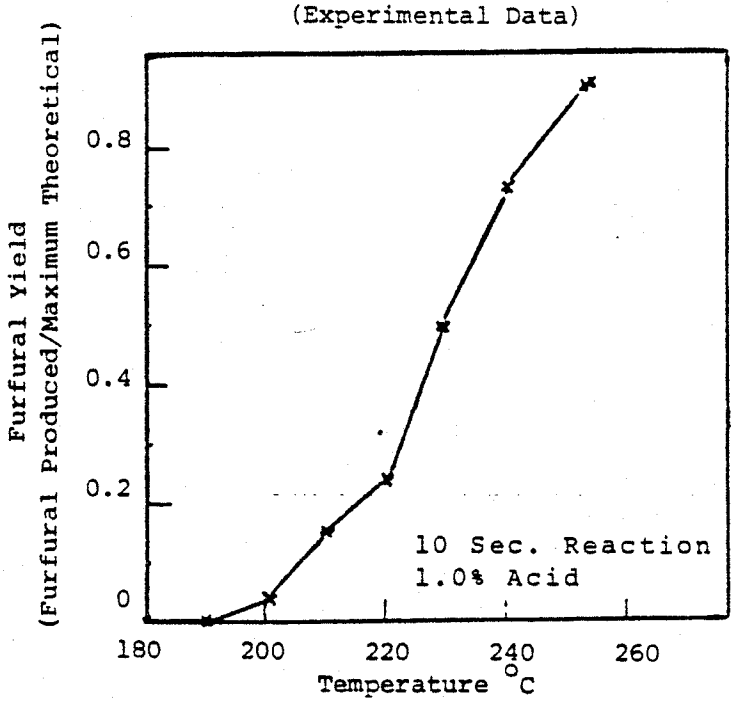

Figure 3.2

Hydrolysis of Hardwood to Glucose as a Function of Reaction Time and Temperature (Experimental Data)

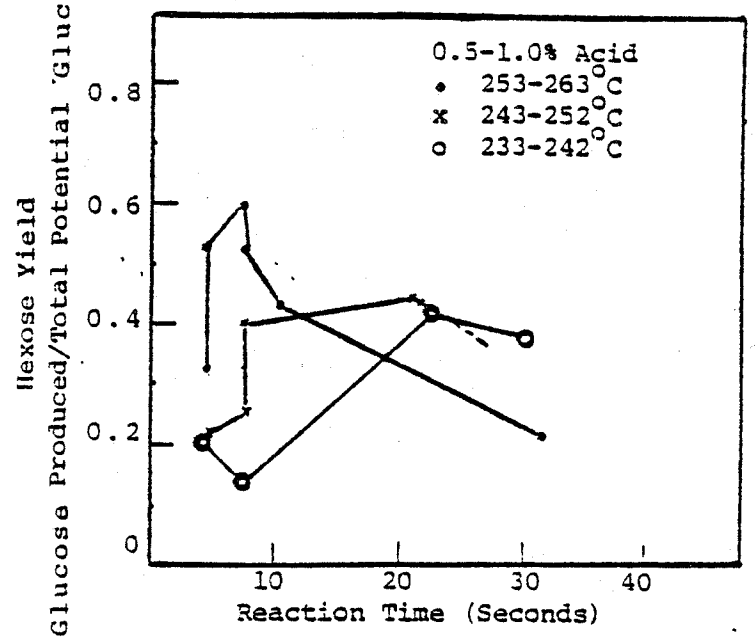

Figure 3.3

Furfural Yield from Hardwood as a Function of Temperature (Experimental Data)

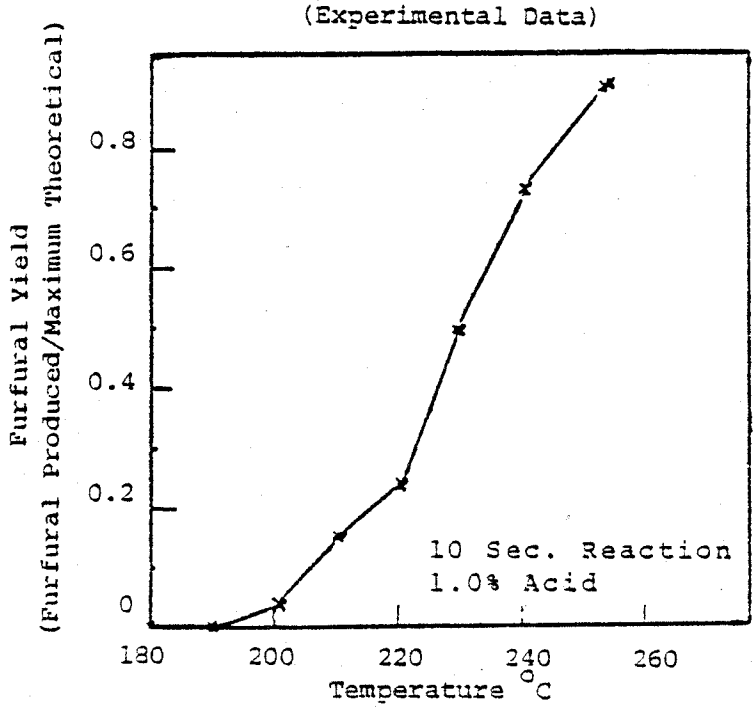

(5) Reactor Feed Solids Concentration

In the commercial scale process design a wood slurry consisting of 20% solids by weight is made up in a slurry vessel. The temperature in this vessel is sustained at 332°F and the sulfuric acid content in the liquor is sustained at approximately 1%. The slurry is held for 5 minutes and, at these conditions, the wood softens and is partially hydrolyzed forming a "mud" which can be pumped using the twin screw pump specified. Work carried out during this study at Badger's Weymouth Laboratory with "through 20 mesh" aspen wood shows that 20% solids "slurries" can be readily softened at the above conditions to form a pumpable mud. Use of 20% solids in the reactor feed for the scaled-up process represents a major change from the small scale where the maximum solids concentration was 10%. However, the small scale operation did not use a slurry vessel for prehydrolysing the reactor feed.

The advantages of increased solids content in the reactor feed are a higher concentration of sugars in the hydrolyzate and reduced reactor energy requirements. (This is fully discussed in Reference 13).

(6) Reactor Steam Usage

The large scale hydrolysis reactor steam usage is based on a reactor temperature of 509°F. Reactor temperature is controlled by varying steam addition rate. Maximum use has been made of the available steam enthalpy by heat recovery at 150 psig from the hot reactor effluent. It is desirable for energy economy to attain as high a temperature as possible in the slurry vessel without causing significant hydrolysis of the cellulose or significant formation of furfural condensation products. A temperature of 332°F was chosen based on Dartmouth kinetics (Reference 1, 2, 3). A slurry vessel temperature of 332°F is also expected to give a sufficient degree of prehydrolysis as discussed in (5) above.

The Alternative Hydrolysis Reaction Case

A different configuration for the hydrolysis system has been investigated in the alternative case design (Design Case II). In the alternative case, a two stage acid hydrolysis reaction is carried out instead of the single stage reaction previously described. The temperature in the first stage reactor is lowered resulting in less conversion of cellulose but greater yield of sugars from the cellulose converted. Unconverted cellulose is then fed to the second stage reactor where the hydrolysis is completed at a higher temperature. The sugar solution produced in the first stage is removed by centrifugation and washing. Sugars produced in the second stage are likewise removed in a separate centrifugation and washing step. Acid hydrolyzate streams from first and second stage are then combined in the neutralization step.

The two stage reactor design case has the potential advantages of lower overall capital costs, higher ethanol yield and less extraneous organic production and less tar production. but the disadvantage of producing less furfural byproduct, no excess electrical power and requiring supplementary fuel for the boiler in the form of wood chips partially offsetting the aforementioned yield advantage.

Although it was beyond the scope of this study it may well be possible to "optimize" the two stage design to increase the level of furfural production while maintaining the ethanol yield. Should this prove possible, the economics of Design Case II might be improved to the extent that the two stage system be preferred from an operational point of view.

Wood Chip Grinding

A refiner grinder stage using 9000 HP total is used to produce "through 20 mesh" (840 micron) wood particles. This choice of unit operation is conservative for two reasons: firstly, the energy usage figure was obtained from production of "through 60 mesh" (250 microns) wood particles and should be lower for "through 20 mesh" (840 microns) particles; secondly, the use of the slurry vessel to precook the wood slurry may allow larger than "through 20 mesh" particles to be used. If the acceptable particle size were as large as say 2000 microns (2 mm) it may well be possible to use a hammer mill for chip grinding thus making significant savings in capital and energy costs.

Lignin Solids Separation and Washing

Lignin solids separation and washing is carried out using three stages of nozzle disc centrifuges. These are special centrifuges which are operated so that wash water is introduced into the periphery of the bowl and flows countercurrently through the solids as they are forced outwards. This gives a high efficiency displacement wash system allowing 99% recovery of sugars in only three stages with a wash water to process flow ratio of 0.19 pounds wash water per pound of process flow. This system was designed and specified by the centrifuge manufacturers on the basis of laboratory trials carried out on Dartmouth hydrolyzate (see Appendix 4).

Other methods of lignin separation investigated during the study were dissolved air floatation followed by centrifugation, liquid hydroclones, and filtration. Although hydroclones at first appeared attractive, a laboratory test using hydrolyzate proved unsuccessful. These laboratory trials demonstrated that hydroclones do not give a good solid-liquid separation due to lignin floc disintegration in the high fluid shear regime within the hydroclone. This trial is the subject of an additional study appended to this report (see Appendix 4).

Hydrolyzate samples were sent to manufacturers of dissolved air flotation units. These manufacturers, specifically Linatex, Krofta Engineering, and Komline Sanderson, indicated that this was a suitable application. However, on the basis of capital cost figures obtained verbally a DAF/centrifugation system does not appear to be a cost effective method when compared with the disc nozzle washing centrifuge system chosen.

Filtration of acid hydrolyzates to remove lignin has been attempted by Dartmouth workers and at Badger Laboratories during this study. Experiments shows that the hydrolyzates are extremely slow filtering due to severe blinding of the filter cloths. Badger has measured the apparent specific resistance of residual lignin/tar cakes at $2.1 \times 10^{-14} m^{-1}$.

Hydrolysate Flashing

Hydrolysate Flashing is used to halt the hydrolysis reaction rapidly and to separate most of the furfural produced. The out-flow from the reactor at temperatures over 480°F is essentially completely liquid since all the cellulose and hemicellulose has been hydrolysed and dissolved and the temperature is above the glass point of lignin (Reference 25). Solidification of the lignin would be expected to take place on cooling, downstream of the flash valve. For this reason blocking of the reactor outlet valve should not be a problem. Blockage may be encountered however in the flash drum outlet (see Appendix III - Summary Report from Professor H.E. Grethlein).

Approximately 85% of the furfural produced in the hydrolysis reaction is separated in the flash vapors from the two stage flash system due to the very high activity coefficient of furfural in dilute aqueous solution. Flash vapors are condensed against incoming hydrolysis water for heat recovery. Total condensate from the two flashes contains furfural at a concentration of 6%.

Neutralization

Neutralization to pH 10 of the acidic supernatant from the lignin centrifuges is carried out using calcium hydroxide. This over-neutralization with lime has been found by researchers at Dartmouth College to precipitate out soluble tars inhibitory to the fermentation.

Gypsum Separation and Washing

Gypsum separation and washing is carried out using liquid cyclones. These allow many stages of washing and separation for relatively little capital cost. This reduces the need for excessive wash water for recovery of sugar from the cake liquors. In the present design eight stages of hydroclones and a final gypsum filtration are used resulting in 99.6% recovery of sugars using only 0.02 pounds wash water per pound of process flow. Hydroclones have been used on a commercial scale in the past for separation of gypsum from aqueous streams.

Sugar Stripping

Sugar stripping using steam further reduces the levels of extraneous organics in the hydrolyzate. Most of the organics inhibitory to yeast fermentation are removed the previous steps of during hydrolyzate flashing and pH adjustment. The levels of these organics are further reduced by steam stripping. This produces a hydrolyzate stream with organic levels found by Dartmouth College researchers to be below that inhibitory to acclimatized yeast. The toxicity of extraneous organics to yeast in the JGC fermentation has been the subject of additional work carried out during the main study and is reported in Appendix 2. This work indicated that extraneous organics remaining in "treated" hydrolysates were not toxic to yeast used in the JGC process.

The Dartmouth work resulted in the following tentative specifications for acceptable levels of organics in the fermentation feed (Reference 25).

Furfural	0.1%
HMF	2.0%
Alpha-pinene	0.1%

Unit 300 - Fermentation

In the fermentation section the sugar solution from the acid hydrolysis section is fed to the continuous fermenters where the fermentable sugars are converted to ethanol.

The fermentation system was designed by Japanese Gasoline Corporation (JGC) under subcontract. The JGC system is a continuous fixed bed fermentation with yeast immobilized within the fermenter. The yeast is entrapped in beads of photo-crosslinkable resin. The resin is a permeable polymer matrix in which the molecular structure is designed to allow free passage of substrate and product while preventing both escape of entrapped yeast or permanent establishment of any contaminants.

The JGC system was chosen for the following reasons:

(1) Capital Cost - the high productivity obtained with the continuous system allows much smaller fermentation volume for a given ethanol production rate than required for batch fermentation.

(2) Stability - the fixed bed nature of the system results in much greater stability to shock loads of inhibitory organics.

(3) Durability - the JGC system uses a crosslinked polymer matrix of much higher compressive and tensile strength compared with natural polymers such as alginate or kappa-carageenan.

(4) Hydrolyzate Fermentability - past work on hydrolyzate fermentability (Reference 5 and 6) has shown increased fermentation rate and yield when a very large inoculum has been used in batch fermentations or when continuous fermentation has been used (Reference 6).

(5) Retention of Tolerance - work at Dartmouth College and elsewhere (Reference 6) shows that yeast strains need adaptation to hydrolyzates in order to give good fermentation rates and yields. The JGC system has the advantage of maximum retention of adapted, tolerant yeast within the fixed bed.

Samples of acid hydrolyzate produced at Dartmouth and further prepared by filtration, neutralization, concentration and steam stripping at Badger's Weymouth Laboratory have been sent to Japan for toxicity trials. In the trials yeast was exposed directly to hydrolysate of pH 5.2. Although no fermentation occurred yeast remained alive. These limited duration experiments suggest that the remaining extraneous organics in the hydrolyzate stream after the above operations were not toxic to the yeast nor corrosive to the entrapping polymer (see Appendix 2).

Unit 400 - Ethanol Purification

Distillation calculations carried out during the present study show that an energy efficient method for ethanol separation from the dilute beer is to use two columns with the first column concentrating the ethanol to some intermediate point and the second column concentrating the ethanol to its azeotropic composition. In this way both columns have much lower reflux ratios (typically 0.4 and 1.6) resulting in much lower energy requirements than a single stage distillation column which requires reflux ratios of 15-20. This system has not been fully optimized and improved energy efficiency may be possible. For example, the distillation scheme based on innovative application of heat pumps operating between intermediate points on the column as described by Grethlein and Lynd could be applicable for very dilute ethanol beers (Reference 32). Further, there may well be alternative separation methods that give lower energy requirements. Low energy separation methods for dilute beers should relax water balance constraints on the hydrolysis section of the process.

Multicomponent Vapor

Multicomponent vapor liquid equilibrium modelling done during the study show that the actual azeotropic composition is lowered and the equilibrium curve depressed from the simple binary model by the presence of extraneous organics such that the distillate from the second column is limited to 80 mole percent ethanol. This nearly doubles the amount of water that must be removed by the molecular sieve to obtain an anhydrous product.

Molecular Sieves

Previous design studies by Badger have shown that molecular sieve dehydration offers several competitive advantages over the standard azeotropic entrainer method, including lower unit energy consumption and easier operation. For these reasons we have selected molecular sieves for the dehydration process. Although the comparison was made for a conventional azeotropic mixture (95% ethanol) it is believed that the conclusions still hold for azeotropic mixtures containing increased amounts of water.

Fuel Grade Ethanol

The anhydrous ethanol product contains 0.5 percent by weight volatile components, most of which is acetaldehyde. No special provision has been made to concentrate and separate these components during the distillation process because of their insignificant amount. When the ethanol product is blended into engine fuels at ten percent by weight of total blend, acetaldehyde will be present at an unobjectionable 0.05 weight percent. This matter has been discussed with a commercial producer of fuel grade ethanol. The tentative conclusion was that the expected impurities were acceptable.

Energy Integration

Concentrating ethanol is an energy intensive process and every opportunity for economically recovering heat should be utilized. Preheating feed with column overheads or bottoms and recompression of overhead vapor to supply reboiler heat are several standard methods. Conventional vapor recompression is found to be uneconomical in either of the two columns in the system because of the wide differences between overhead and bottoms temperatures and the minimum temperature differences required to transfer heat in the reboilers. What is needed is an overhead composition not so far removed from the bottoms composition. Such an opportunity presents itself by energy integration between units. The overhead vapor from the sugar stripper can be economically utilized to reboil the beer column using vapor recompression. This requires 2.2 mw of power but saves 17 pounds steam per gallon of ethanol product.

Unit 500 - Furfural Recovery

The design of the furfural recovery section is based on data developed by Smuk (Reference 8). Vapor-liquid equilibrium calculations have been based on a furfural-water binary mixture. For the purposes of the present study this approach is considered satisfactory. However, more rigorous calculations accounting for the effect of extraneous organics should be carried out as an additional study before a final design is developed.

Unit 600 - Tankage and Export

Denaturing Product Ethanol

Fuel alcohol, if transferred to another plant, need not be rendered unfit for beverage use, however, in the present study, it was assumed that not all customers would have their own denaturing facilities and therefore denaturing facilities have been included. Ethanol exported from the plant will have 5 gallons of gasoline added for every 100 gallons of pure ethanol product. This decision results in new capital equipment (for gasoline storage and blending) and adds 5% required capacity to the ethanol product tanks export pumps or around $1 mm to the capital cost in the base case plant.

Fusel Oil

A fusel oil storage tank and export pump is provided to give flexibility in choosing the ultimate disposition of fusel oil byproduct. It may be burned onsite in the boiler, sold directly as is, or blended with ethanol product as fuel alcohol. In the present study provision has been made for its export. However, no credit has been taken for its sale.

Unit 700 - Environmental

Waste Water Treatment

Aqueous effluents produced from ethanol beer stripping contain approximately 40,000 pounds per hour of extraneous organics produced during the hydrolysis reaction and fermentation. These are treated by evaporation, burning of the concentrated organics as fuel and anaerobic digestion of part of the evaporate.

Anaerobic digestion alone was investigated as a possible alternative method of waste stillage treating. This would have the advantage of converting the organics to methane, a highly versatile fuel which could be burned, exported directly or even used as a feed for a methanol synthesis process. 339,840 cubic feet per hour (309 million BTU per hour) of methane from an anaerobic digestion system would be obtained; (resulting methanol production would be around 9000 tons per year). The anaerobic treatment system would, however, cost in the region of $20 million (including aerobic polishing) and has the added disadvantage that it would be several times larger than any such system previously built.

The advantages of the evaporation option are that it produces a liquid solvent mixture which can be burned to produce steam in excess of evaporator requirements. Associated capital costs including anaerobic digestion of evaporate and extra boiler capacity are around one half of that for the large anaerobic digestion system and production of a concentrated mixed organics stream allows the future possibility of separation of the more valuable components such as hydroxymethyl furfural (HMF), levulinic acid, oleic acid or alpha pinene.

The condensate from the evaporators is of suitable quality to allow recycle of 50% of it to the hydrolysis section as process water. The remaining 50% is sent to anaerobic digestion and aerobic polishing to reduce the organic level to less than 5 ppm before being recycled to cooling tower make-up water.

The waste water treatment system allows total recycle of water and eliminates the need for any aqueous discharge to the environment.

Demineraliser regeneration and boiler blowdown streams are treated in the evaporation system.

Low Pressure Vents

Most of the low pressure process vents contain air or carbon dioxide saturated with water and small amounts of volatile organics. Air comes both from displacement during filling of vessels and from release of air trapped in pores in the raw wood feedstock. The organics are mostly ethanol and the extraneous organics such as terpenes and extractive resins. In process modeling terpenes and resins were characterized as alpha pinene and oleic acid respectively. These would present odor problem if vented directly to the atmosphere. Scrubbing with water would be inadequate since alpha pinene and oleic acid are insoluble. Recovering such small amounts of organics by chilling and condensing is uneconomical. Therefore, it was decided to incinerate the vents by mixing them with combustion air in the boilers.

Unit 800 - Utilities

Boilers

Two boilers are provided for the process. Each produces 50% of the total steam and 64% of the process needs. (Excess steam is produced in the base case design.) A further design criterion for the boilers is that either must be capable of burning all of the lignin/tar residue produced by the acid hydrolysis section. This capability avoids the necessity of storing or disposing of excess lignin/tar sludge produced during periods when one of the boilers is not in operation. (During these periods mixed solvents would be stored or exported for incineration.)

The fuel mix taken by the boiler under normal circumstances comprise:

	% of Total Fuel Energy
Lignin/Tar Solids	53%
Mixed Solvents	46%
Digester Gas	1%

The minimum boiler steam pressure was dictated by the hydrolysis reactor steam pressure requirement of 1100 psia.

Flakt Drying System

Lignin sludge at 50% moisture from the hydrolysis process is dried using the Flakt drying system. This is a relatively new system but has several recent commercial applications in Europe and the U.S.

A portion of the boiler flue gas is used to dry the sludge in a spray dryer system. Solids are dried to a powder form containing around 15% moisture. This results in much higher burner efficiency (around 89%) than firing wet solids. A conservative efficiency of 85% has been used in calculations for the present study.

The total flue gas stream from the boilers, including that used for solids drying, is processed for particulate emissions control.

Turbogenerator

In order to determine the best steam pressure for economical design for the turbogenerator, a study was carried out using vendor-supplied data. The major trade-off was that of higher steam pressures giving increased power generation versus the possibility of higher capital cost generating equipment required for higher pressure steam.

For larger turbines of 8000 kw upwards steam inlet pressure has little effect on capital costs over the range 200-1600 psig. Therefore, at both the 25 and 5 million gallon scale the turbogenerators are specified to operate on the 1100 psia steam direct from the boilers.

PROCESS DESCRIPTION

This section contains a description of the process operation, process flow diagrams, plot plans, and equipment lists.

Unit 100	Feedstock Handling
Unit 200	Acid Hydrolysis
Unit 300	Fermentation
Unit 400	Ethanol Purification
Unit 500	Furfural Recovery
Unit 600	Offsite Tankage
Unit 700	Waste Treatment
Unit 800	Utilities

The process description as presented applies to both the 25 million gallon per year ethanol plant (base case) and the 5 million gallon per year plant with onsite power generation (Design Case III). A separate process description for the alternative case hydrolysis reaction (Design Case II) is given. No additional process description for the 5 million gallon plant with purchased electricity (Design Case IV) is given since there is no significant operational difference between this and Design Case III.

Process flow diagrams for Design Case I (base case)and for the hydrolysis reaction area of Design Case II (alternative case) are presented. The remaining units in Design Case II are identical to the base case.

Equipment lists for Design Case I, Design Case II, and Design Case III (5 million gallon with onsite power generation) are also provided. The equipment list for Design Case IV is not provided since it differs from Design Case III in only two items: firstly, elimination of the turbogenerator and, secondly, slight reduction in the size of the boilers.

Unit 100 - Feedstock Handling

Fresh wood chips (50% moisture) are delivered by rail (railcar type 60 short ton net capacity) or truck (truck trailer type 24 short ton net capacity). The receiving station consists of a hydraulic truck dumper, a truck weigh scale, a rail grating and a railcar weigh scale. Chips are offloaded into the washing flume which allows separation of heavy tramp material such as rocks and large metal items which sink to the bottom of the flume. Chips are swept by the flume pump (PP-101) and discharge to a bucket conveyor GS-101 which transfers the chips to the wood pile. Periodically, the flume is emptied and separated tramp material cleared. Water entrained with the chips as they are conveyed from the flume drains back from the conveyor.

The wood pile holds two weeks supply of wood chips and is managed on a first in first out basis by means of a front end loader truck GM-104A . Chips are fed from the pile through a vibratory chip pile screen (with 6" aperture) using a front end loader GM-104B to the belt conveyor GS-102 which starts below ground. Entrained small metallic items down to ½" size are removed by a magnetic separator GS-105. The belt conveyor transfers the chips to the hydrolysis process, Section 200.

Unit 200 - Acid Hydrolysis

Chips from the belt conveyor are held in an activated bottom discharge chip feed bin MB-216 from where they are fed by means of chip screw feeders GS-201 A/B/C to the refiner grinders GG-202A/B/C. The grinders reduce the chip size to through 20 mesh (0.84 mm). The wood grinds are conveyed using conveyors GS-203A/B/C to a screen GY-229 which removes oversize wood of 1" or greater for regrinding. Wood grinds are fed from the ground wood bin MB-217 to weigh belts GS-231A/B. MB-217 is equipped with an activated bottom discharge to ensure continuous discharge to the weighfeeder. From the weighfeeder wood grinds fall into the rotary high pressure feeders GA-204A/B which feeds into the slurry vessels MS-201A/B.

Hydrolysis process water from storage tank MT-223 is pumped by PP-202 through exchanger TT-209 where it is heated by exchange with hot hydrolyzate to 141°F. It is further heated to 360°F by contact with low pressure hydrolyzate flash vapors (TT-211), and high pressure hydrolyzate flash vapors (TT-202 and TT-201). Sulphuric acid is metered using PD-219 and mixed, under flow ratio control, with the process water stream in static mixer GA-207 to give a dilute acid solution. The acidified process water is further heated to 413°F in TT-207 using high pressure steam (1100 psia) and is transferred under flow control to MS-201A/B where it is mixed with the ground wood to make a slurry of 20% solids concentration. Conical rotating screw mixers GA-205A/B ensure a uniform slurry in vessels MS-201A/B and prevent plugging of the bottom outlet.

Vessels MS-201A and B are maintained under a nitrogen pressure of 150 psig to prevent boiling and ensure a reasonable net positive suction head for pumps PD-201A/B. Vented vapors from MS-201A/B are condensed in TT-215 using cooling water. Condensate drains by gravity to second stage wash tank MS-225 and the remaining cooled vapor enters the low pressure vent header.

Wood slurry mud formed at the conditions in the slurry vessel flows out of MS-201A/B into the positive displacement screw pumps PD-201A/B and is forced under 1000 psia pressure into the hydrolysis reactors MR-202A/B. High pressure steam is injected into the hydrolysis reactors to raise the reactor temperature to 509°F. Pressure in the reactor is maintained by a back pressure control valve in the outlet line. Reactor temperature is controlled by varying the steam injection rate.

At the reactor conditions hexan polymer (cellulose) is hydrolyzed to soluble hexose sugars and other degradation compounds and pentosan polymer (hemicellulose) is converted to furfural and other degradation products.

Outflow from the reactors is flashed to 150 psig into the high pressure flash drum MS-203. Pressure is maintained in MS-203 by a pressure control valve on the vent outlet from TT-201. Liquid outflow from MS-203 on level control is further flashed to 10 psig in the low pressure flash drum MS-204. Pressure is maintained in MS-204 by a pressure control valve on the vent outlet from TT-211. Liquid from MS-204 consisting of a slurry of lignin and tar solids (6.9% by weight) in an aqueous solution of hexose sugars (6.5% by weight) and other miscellaneous organics is pumped on level control by lignin slurry pump PD-204 A/S and further cooled to 200°F by contact with incoming process water in slurry cooler TT-209.

Flash vapors from MS-203 containing mainly water and furfural are condensed against incoming process water in primary feedwater preheater TT-201 and high pressure flash vapor aftercooler TT-202 and further cooled in aqueous furfural cooler TT-205 by cooling water before being sent to the aqueous furfural drum MS-209. A portion of the high pressure flash vapors from MS-203 is also sent to the sugar stripper reboiler TT-203, condensate is returned from TT-203 to TT-202 using sugar stripper reboiler pump PP-226. Flash vapors from MS-204 are mainly condensed against incoming process water in secondary feedwater preheater TT-211. A small portion is used to reheat neutralized hydrolyzate slurry in hydrolyzate reheater TT-213. Condensate is returned to TT-212 by hydrolyzate reheater pump PP-227. Condensate from TT-211 and TT-213 is cooled in low pressure flash vapor aftercooler TT-212 and sent to MS-209.

Lignin residue is separated from the hydrolyzate in a three stage centrifuge system using lignin centrifuges GC-209A/B, GC-210A/B and GC-232A/B. Process water for counter current washing of the lignin solids to reduce losses of fermentable sugars is introduced into the third stage centrifuge GC-232 A/B. The washed lignin solids are dewatered to 50% moisture in solid bowl dewatering centrifuges GC-214A/B. The lignin sludge drops into lignin sludge tank MS-212 from where it is screw conveyed via GS-211A/B/C to drying and burning.

Overflow hydrolyzate from the first stage centrifuge flows to the neutralization reactor MR-206 where it is neutralized to pH 10 with lime slurry. Outflow from the neutralization reactor consisting of gypsum and precipitated tars (1.4% by weight total) in aqueous hydrolyzate is pumped using alkaline hydrolyzate pump PP-209 to gypsum hydroclone feed tank MS-207 where it is reacidified to pH 5 with sulfuric acid. Gypsum and precipitated tar solids are separated from the liquids and countercurrently washed using eight stages of hydroclones GC-215 and GC-216A-G.

Gypsum and tar solids are finally dewatered to 60% solids using gypsum rotary filter GF-220. To maximize precipitation of gypsum solids in order to prevent scaling in downstream process stages, the gypsum slurry is heated to 225°F with 10 psig flash vapors in TT-213 prior to separation and washing.

Overflow from the primary gypsum hydroclone GC-215 is cooled to 150°F in overflow cooler TT-214 and held in sugar stripper feed tank MT-222. MT-222 is sized for two hours hold time and is equipped with an internal baffle system and sump to allow separation of any entrained solids from upset operation of gypsum or lignin separations. Sump solids are returned periodically using sump pump PP-224 to the gypsum filter feed tank MS-214.

A small flow of hydrolyzate is taken from MT-222 via lime slurry liquor pump PP-216 and used for lime slurry make-up.

Residual extraneous organics inhibitory to the yeast fermentation are reduced to an acceptably low concentration by steam stripping in sugar stripper AS-201. AS-201 is fed on flow control by sugar stripper feed pump PP-215 and is reboiled by vapors from the high pressure flash drum MS-203. Condensate from TT-203 is returned under level control by PP-226. Overhead vapors from the sugar stripper are recompressed in PC-402 and used to reboil the beer column AS-401. Overhead vapors from the sugar stripper can also be directed to the furfural azeo column AS-501 in the event of a temporary shutdown of the beer column. Subcooled condensate from the beer column reboiler is returned to the aqueous furfural drum MS-209.

Sugar stripper bottoms are used to preheat the incoming feed in sugar stripper preheater TT-210, and further cooled to 122°F by exchanging against cold boiler feed water in hydrolyzate cooler TT-206 and are finally stored in fermentation feed tank MT-604 at a temperature of 122°F to inhibit contamination.

Aqueous furfural streams separated during hydrolyzate processing are collected in MS-209 and transferred to intermediate storage in the azeo column surge tank MT-606.

Lime slurry is made up in lime mix tank MS-218 using hydrolyzate liquors from MT-222. Lime powder is metered from bulk storage hopper MB-220 using star-valve GS-225 and weigh belt GS-226 to MS-218 where it is slurried with incoming hydrolyzate liquors. Slurry is circulated using lime mixing pump PP-220 and fed to lime slurry day tanks MT-219A/B. This operation is continued until the day tanks are full. Lime solids concentration in MT-219 is adjusted if necessary by recirculation to MS-218 using lime slurry pumps PP-221A/B.

Sulphuric acid is dosed directly to the process from day tank MT-221 using acid dosing pump PD-210 and sulfuric acid feed pump PD-219. MT-221 is filled from bulk storage tank MT-603.

Hydrolysis process water and fermenter off-gas scrubber water, is provided by MT-223. This tank is also used to collect recycled process water from stillage evaporation (MS-701) and furfural purification (MS-502) as well as make-up process water.

Unit 200 - Acid Hydrolysis (Alternative Case)

Chips from the belt conveyor are held in an activated bottom discharge chip feed bin MB-216 from where they are fed by means of chip screw feeders GS-201 A/B/C to the refiner grinders GG-202 A/B/C. The grinders reduce the chip size to through 20 mesh (0.85 mm). The wood grinds are conveyed using conveyors GS-203 A/B/C to a screen GY-229 which removes oversize wood of 1" or greater for regrinding. Wood grinds are fed from the ground wood bin MB-217 to weigh belts GS-231A/B. MB-217 is equipped with an activated bottom discharge to ensure continuous discharge to the weigh feeder.

From the weighfeeder wood grinds fall into the rotary high pressure feeders GA-204A/B which feed into the slurry vessels MS-201A/B.

Process water from storage tank MT-223 is pumped by PP-202 through exchanger TT-209 where it is heated by exchange with hot hydrolyzate to around 141°F. It is further heated to 360°F by contact with low pressure hydrolyzate flash vapors (TT-211), and high pressure hydrolyzate flash vapors (TT-202 and TT-201). Sulphuric acid is metered using PD-219 and mixed, under flow ratio control, with the process water stream in static mixer GA-207 to give a 1% acid solution. The acidified process water is further heated to 413°F in TT-207 using high pressure steam (900 psia). A portion of this stream is taken off to the second stage hydrolysis. The remainder is sent under flow control to MS-201A/B where it is mixed with the ground wood to make a slurry of 20% solids concentration. Conical rotating screw mixers GA-205A/B ensure a uniform slurry in vessels MS-201A/B and prevent plugging of the bottom outlet.

Vessels 210 A and B are maintained under a nitrogen pressure of 150 psig to prevent boiling and ensure a reasonable net positive suction head for pumps PD-201A/B. Vented vapors from MS-201A/B are condensed in TT-215. Wood slurry mud formed at high temperature flows out of MS-201A/B into the positive displacement screw pumps PD-201A/B and is forced under 800 psia into the hydrolysis reactors MR-201A/B. High pressure steam (900 psia) in injected into the hydrolysis reactors to raise the reactor temperature to 482°F. Pressure in the reactor is controlled by varying the steam injection rate. At the reactor conditions a portion of the hexan polymer (cellulose) is hydrolyzed to soluble hexose sugars and other degradation compounds and the pentosan polymer in hydrolyzed to pentose sugars, furfural and other degradation compounds.

Outflow from the reactors is flashed to 150 psig into the high pressure flash drum MS-203. Liquid outflow from MS-203 is further flashed to 10 psig in the low pressure flash drum MS-204. Liquid from MS-204 consisting of a slurry of lignin, unconverted cellulose, and tar solids (9.1% by weight) is further cooled to 200°F by contact with incoming process water in TT-209. Flash vapors from MS-203 containing mainly water and furfural are condensed against incoming process water in TT-201 and TT-202 and further cooled in TT-205 before being sent to the aqueous furfural drum MS-209. A portion of the high pressure flash vapors from MS-203 is also sent to the sugar stripper reboiler TT-203. Condensate is returned from TT-203 to TT-202 using PP-226. Flash vapors from MS-204 are mainly condensed against incoming process water in TT-211. A smaller portion is used to reheat neutralized hydrolyzate slurry in TT-213.

Lignin residue and unconverted cellulose is separated from the hydrolyzate in a three stage centrifuge system using centrifuges GC-209A/B, GC-210A/B and GC-232A/B. Process water for countercurrent washing of the lignin and cellulose solids to reduce losses of fermentable sugars is introduced into the third stage centrifuge GC-232. The washed solids are dewatered to 50% moisture in solid bowl centrifuges GC-214A/B. Overflow hydrolyzate from the first stage centrifuge GC-209A/B flows into the neutralization reactor MR-206. The sludge from GC-214 containing lignin residue precipitated tars and unconverted cellulose is discharged into the sludge dilution vessel MS-259 where it is diluted with process water to 35% solids before being pumped to the second stage slurry vessel MS-251 where it is mixed with hot acidified process water from TT-207. The temperature in the slurry vessel is 263°F and it is maintained at a pressure of 150 psig with a nitrogen blanket to prevent boiling and to ensure a reasonable net positive suction head for second stage hydrolysis feed pump PD-250. Lignin/cellulose slurry is pumped under 800 psia pressure into the second stage reactor which operates at 482°F. Here, remaining cellulose is converted to hexose sugars and other degradation products.

Outflow from the reactor is flashed to 150 psig in second stage high pressure flash drum MS-252 and is further flashed to 10 psig in low pressure flash drum MS-253. Slurry from MS-253 is cooled to 200°F and residual lignin and tar solids are separated and washed in a two stage centrifuge system GC-251A/B and GC-252. Process water for washing is fed under flow control to GC-252. Discharged solids from GC-252 are finally dewatered in GC-253 which produces a sludge of 50% moisture content. The sludge is discharged to lignin sludge tank MS-257 and is transferred to drying and burning via sludge screws GS-254 A/B/C.

Flash vapors from MS-252 flow to the vapor outlet of MS-203 to be condensed in TT-201 and flash vapors from MS-253 flow to MS-204.

Hydrolyzate overflow from the second stage primary lignin centrifuge GC-251 is sent to the neutralization reactor MR-206 for neutralization along with hydrolyzate liquors from the first stage.

From the neutralization reactor onwards the process is essentially the same as for the base case (one stage reactor) process.

Unit 300 - Fermentation

The fermentation section is designed to continuously produce alcohol from raw material consisting of saccharified wood, by means of a bioreactor in which immobilized yeast is used. The following covers the startup, normal operation, sludge removal and decontamination, regeneration of immobilized yeast, and emergency shutdown.

(1) Startup

41,000 gallons (total) of immobilized yeast beads are introduced from an immobilized yeast production unit into fermenters MR-301A and MR-301B. Subsequently, 61,500 gallons of medium is introduced there into. Preculture is started by injecting aseptic air into these reactors using an air compressor PC-308. Usually, the initial temperature of fermentation in these reactors is constant, but it rises due to heat of fermentation.

When the temperature reaches 89.6°F, it is maintained by cooling the broth in the broth coolers (TT-302 and TT-303), using the broth cycle pumps (PP-301 and P-302). After the fermentation has been completed, the broth is poured into a pit and the medium is again introduced into reactors A and B. The same operation as above-mentioned is repeated two or three times.

Also, the broth from the second and subsequent operation can be fed directly to the distillation section, because its fermentation has almost been completed.

Since the yeast concentration of the immobilized yeast will attain normal levels as a result of the above operation, the broth need not be taken out of the system after the final batch operation and normal operation can proceed.

(2) Normal Operation

Medium from the preparation section is supplied at the rate of 1344 gpm to two trains of fermentation tanks, cooled at 89.6°F by medium cooler, and introduced into reactor A. Carbon dioxide gas formed by fermentation is passed through a scrubber AS-301, and a part of the carbon dioxide gas is introduced into reactor A using the recycle blower and the immobilized yeast is fluidized. When the amount of carbon dioxide gas formed is small at the early stage of fermentation, it is fluidized with aseptic air. Also, it is cooled and kept at 89.6°F by the broth cooler using the broth recycle pump to prevent the temperature in the reactors from rising due to the heat of fermentation. A part of the recycle broth is introduced into reactor B, fermented in the same manner, and fed into the distillation section as fermented broth.

(3) Sludge Removal and Decontamination

This fermentation system is controlled at pH = 4.0, and contamination due to various bacteria, etc., which hinder alcohol fermentation, is slight. Also, this fermentation system is designed so that it can sufficiently cope with such contamination by means of the following operations. First, 10 wt.% sodium polyphosphate is prepared in the pH (potassium bisulfite-metal) tanks MS-305A/B in advance. After the broth in the reactors A and B has been fermented, the fermented broth is poured into the pit and fed to the distillation section.

Subsequently, sodium polyphosphate of about 1 wt.% is obtained by mixing the above-mentioned 10 wt.% sodium polyphosphate and process water in the piping, it is introduced into reactors A and B, and sludge adhering to the surface of the beads is removed, while fluidizing the immobilized yeast for about one hour using air. After putting the washing water into the pit, the sludge is almost completely removed by carrying out the same operation once more. Therefore, the fermentation is restarted by introducing the medium from reactor A to reactor B in accordance with the normal procedure. On the other hand, PBM of about 10 wt.% is prepared in the PBM tanks, the flow rate is controlled with the PBM pump (PD-307) so that the concentration of the above-mentioned 10 wt.% PBM becomes about 1,000 ppm in the medium, and this PBM is introduced into the reactors. Various bacteria in the fermentation system can be almost completely removed and normal fermentation speed can be maintained by continuously carrying out this procedure for about ten days.

(4) Regeneration of Immobilized Yeast

Though normal operation leads to practically no deactivation of the immobilized yeast in reactor A, it gradually deactivates that in reactor B. Therefore, in order to maintain stable fermentation activity, it can be said to be effective to occasionally regenerate the immobilized yeast in reactor B. Though the frequency of regeneration depends on the state of deactivation, one cycle per month is considered to be desirable. One method of regeneration is to transfer about one-fourth of the immobilized yeast in reactor B into the catalyzer regeneration tank MS-303A/B using the IMY transfer pump PP-304A/B, and after putting the broth into the broth storage tank, fresh medium is added thereto, and aeration and agitation is conducted.

After repeating this procedure twice a day, this broth is put into reactor B using the broth transfer pump PP-303A/B. It is possible to maintain stable fermentation for long periods of time by repeating this procedure once a week.

(5) Emergency Shutdown

Though an emergency situation is not foreseen at the fermentation section, it is necessary to shutdown the operation in the event of an emergency at the downstream sections such as distillation section and waste treatment section. The method of coping with an emergency in the fermentation system is to take measures to preserve the immobilized yeast in a live condition for a long period of time.

In this process, it is considered best to cope with an emergency by stopping the supply of medium, switching the cooling water of broth cooler A (TY-302A/B) and broth cooler B (TY-303A/B) to that of about 5°C if possible, and lowering the temperature of reactors A and B to 10-5°C. Therefore, it is necessary to separately provide a facility which can supply cooling water of 5°C for emergency use.

Immobilized Yeast Section

This section is designed to comprehensively immobilize yeast having alcoholic fermentability, using photo-crosslinkable resin, and to continuously produce immobilized yeast in bead form. The following covers the basic operation of this section.

(1) Feed Preparation

Usually, the photo-crosslinkable resin (ENTG-3800) prepolymer is packed in drums and should preferably be kept at 20°C or less. When producing immobilized yeast, the photo-crosslinkable resin (ENTG-3800) prepolymer is fed into the resin tank MS-311 using the ENTG-pump PP-311 and the specified amount of polymerization initiator (KW-30) is added. These are then thoroughly mixed, using a mixer. As this resin solution remains stable over a relatively long period of time, no special precautions are required. Na-alginate, which is an immobilizing aid, is dissolved with aseptic water in the Na-alginate tank MS-313, to the specified concentration. The temperature is raised with steam, as necessary, when dissolving the Na-alginate. On the other hand, it is necessary to keep the yeast at 5°C or less, as an aseptic water suspension. The yeast liquid is fed into the yeast liquid tank MS-312 using the yeast pump PP-312 and, when necessary, its concentration is adjusted using aseptic water.

The resin solution, Na-alginate solution, and yeast suspension prepared in the above-mentioned manner are fed at their respective flow rates to the line mixer GA-311 using the feed pump PD-313, and after being uniformly mixed, they are introduced into the next process, namely, the immobilization unit.

(2) Immobilization

The liquid mixture fed from the line mixer is supplied to the atomizer of the continuous immobilizing unit. It is dripped form the nozzle of the atomizer to the header of the $CaCl_2$ solution as particles of 2-2.5 mm size. The $CaCl_2$ solution is prepared beforehand in the Ca-tank (MS-314) to the specified concentration, and is introduced into the header using the Ca-pump (PP-315). In addition, the solution is recycled, using the Ca feed pump to return it through four trains of lamp units and separators, to the header. The flow rate of each train at this recycling must be set to its optimum value necessary for immobilization. The mixed solution of resin and yeast dripped from the atomizer is then solidified in the form of beads by reaction with $CaCl_2$. In addition, it is fed together with the fluidized $CaCl_2$ solution into the lamp units, and dropped into the separators as completely immobilized yeast obtained by photo-crosslink reaction.

The immobilized yeast accumulates in the lower part of the separators, and is controlled using a sequencer so that is automatically flows into an intermediate storage tank at a constant rate. As $CaCl_2$ is recycled from the upper part of the separators through one of two strainers, the strainer must be switched to the other one to permit cleaning, whenever necessary. Also, a part of the $CaCl_2$ solution is drained from the recycle line to the drain tank. $CaCl_2$ solution equivalent to the drained $CaCl_2$ solution is automatically supplied from the Ca tank. Immobilized yeast accumulated in the intermediate storage tank is cleaned with process water to wash away $CaCl_2$. The sequencer is controlled so that the cleaned immobilized yeast flows into an immobilized yeast storage pit at a constant rate. The immobilized yeast storage pit is kept at 5°C using a chiller GY-313, and the product immobilized yeast is stored in this pit until it is to be supplied to an alcohol production plant.

(3) Cleaning

Usually, the aforesaid immobilization operation is carried out continuously about 16 hours a day. After the continuous operation is completed, it is necessary to clean the inside of the spiral tube of the lamp unit. For this purpose, the $CaCl_2$ solution is drained out of the immobilization system and cleaning liquid, prepared in advance to the specified concentration in the cleaning liquid tank, is introduced into the spiral tube of the lamp unit, and is held there for several hours. Subsequently, the immobilization operation can be resumed by returning the cleaning liquid to the cleaning tank and flushing the inside of the spiral tube with process water.

Unit 400 - Ethanol Purification

Dilute beer containing 3.3 weight percent ethanol from fermentation (Unit 300) is stored in dilute beer feed tank MT-406 at 90°F to prevent contamination. From there it is pumped by dilute beer feed pump PP-409A/S on flow control to feed preheater TT-413 to exchange heat with hot aqueous furfural previously condensed in the shell side of the beer column reboilers. The fresh feed along with recycled bottoms from the rectification column, then enters degasser drum MS-401 where some of the dissolved CO_2 leaves as flash vapor. Degasser drum condenser TT-402 uses cooling water to condense and recover the light organic compounds and some water from the flash vapor and these liquids return to MS-401 through a loop seal. The remaining cooled vent vapor passes into the low pressure vent header. The degassed feed then passes through a loop seal and enters beer column AS-401 on tray twelve.

AS-401 is an atmospheric column with 16 sieve trays and is designed to concentrate the ethanol to 40 weight percent in the overhead while losing negligible amounts in the stillage. Heat is supplied to the column by beer column reboilers TT-403A/B. These are thermosiphon reboilers and the heating medium is overhead vapor from sugar stripper AS-201 compressed by sugar stripper vapor compressor PC-402 to 24 psig. The flow of compressed vapor is sent to the shell side of TT-403A/B and controlled by the column bottoms pressure. Excess vapor flow is sent directly to Azeo column AS-501. The process condensate from TT-403A/B is further cooled in aqueous furfural cooler TT-412 and feed preheater TT-413. The flow of hot aqueous furfural to TT-413 is controlled by the temperature of the dilute beer feed to MS-401.

The remainder of the hot aqueous furfural is cooled in TT-412 using cooling water. The combined cooled aqueous furfural streams are sent to aqueous furfural drum MS-209.

The flow of stillage from the bottom of the beer column, is controlled by the column liquid level and is pumped by beer column bottoms pump PP-401A/S to first effect evaporator GE-701.

Overhead vapor from AS-401 is condensed in beer column condenser TT-405 using cooling water and collected in beer column reflux drum MS-402. Vapor from MS-402 is further condensed in beer column vent condenser TT-406 using cooling water and the liquid is returned to the drum. The remaining cooled vent vapor passes into the low pressure vent header.

Reflux to AS-401 is pumped by beer column reflux pump PP-403A/S on flow control reset by reflux drum level control. Distillate product is fed to tray 14 of rectification column AS-402 by PP-403A/S on flow control reset by temperature control from a tray near the top of AS-401.

AS-402 is an atmospheric column with 24 sieve trays and is designed to concentrate the ethanol to its azeotropic composition (91.2 weight percent) in the overhead. The bottoms stream, containing 3.5 weight percent ethanol in water, is pumped by rectification column bottoms pump PP-407A/S on level control and recycled as feed to the beer column through MS-401. Heat is supplied to this column by rectification column reboiler TT-409. This is a thermosiphon reboiler and the heating medium is 50 psig steam controlled by the column bottoms pressure.

Overhead vapor from AS-402 is condensed in rectification column condenser TT-410 using cooling water and collected in rectification column reflux drum MS-405. Vapor from MS-405 is further condensed in rectification column vent condenser TT-411 using cooling water and the liquid is returned to the drum. The remaining cooled vent vapor passes into the low pressure vent header.

Reflux to AS-402 is pumped by rectification column reflux pump PP-408A/S on flow control reset by reflux drum level control. Distillate product is pumped to molecular sieve feed tank MT-404 by PP-408A/S on flow control reset by temperature control from a tray near the top of AS-402.

Several components, chiefly amyl, isoamyl, and propyl alcohols, termed fusel oils, and furfural tend to accumulate within the rectification column and would eventually affect the column's performance if not removed. A small continuous liquid sidedraw purge removes these components by gravity flow. The sidedraw stream is mixed with process water, cooled in fusel oil cooler TT-407 by cooling water, and enters fusel oil decanter MS-403. There the oily phase is decanted and pumped by fusel oil pump PP-405A/S on level control to fusel oil storage tank MT-605. Water and dissolved alcohols are returned to AS-402 on flow control by wash return pump PP-404A/S.

Azeotropic ethanol is pumped from MT-404 by molecular sieve feed pump PP-406A/S on flow control to molecular sieve GZ-401. This package unit, consisting of three towers and a regeneration skid, will dehydrate the ethanol to 199^{+} proof via adsorption into the dessicant. The dessicant (molecular sieves) preferentially absorbs water over ethanol as the ethanol passes through the dessicant bed. The spent (saturated) dessicant is regenerated by simultaneously applying heat via embedded steam tubes and pulling a vacuum on the bed using a condenser and a vacuum pump. Dehydrated ethanol product is denatured and sent to ethanol product tanks MT-601A/B. Waste water is sent to equalization tank MT-703.

Unit 500 - Furfural Recovery

Aqueous furfural from intermediate storage in MT-606 is fed to the azeo column AS-501. This produces an overhead vapor stream of composition close to the azeotropic furfural water mixture (35 percent by weight furfural). This is condensed in TT-503 and subcooled in TY-502. The cooled stream splits into two immiscible phases, a furfural - rich phase and a watery phase. These are separated in decanter MS-501. The furfural rich phase from the decanter containing 84% furfural is sent to the dehydration column AS-502 from where a 99.5% furfural stream is taken as the bottoms product. This is cooled by heat exchange with incoming feed from the decanter and further cooled to 100°F in TY-507 and sent to product storage in MT-602A/B. The watery phase from the decanter is recycled as reflux to the azeotrope column. Azeotrope column bottoms consisting of water and extraneous organics are cooled to 100°F against incoming azeo column feed and sent to decanter MS-502 where alpha-pinene which separates out of solution at this temperature, is removed as a separate layer and sent to mixed solvents storage tank MT-702.

Aqueous furfural column bottoms from the decanter are recycled to the hydrolysis process water tank MT-223.

Unit 600 - Offsite Tankage

Offsite tankage is provided for bulk storage of intermediate and final liquid products, sulfuric acid, gasoline and diesel fuel, and fire water.

Ethanol product from molecular sieve package unit GZ-401 is pumped to ethanol product tanks MT-601A/B. Prior to entering the tank, the ethanol is denatured by blending with gasoline in the proportion five gallons of gasoline per one hundred gallons of ethanol product. Gasoline delivered by truck or railcar is stored in gasoline storage tank MT-610 which has two days capacity. The gasoline is blended into the ethanol by gasoline blending pump PP-610A/S on flow control. Denatured ethanol is transported to the shipping point by ethanol export pumps PP-601 A/B/S.

Furfural product from furfural product cooler TY-507 is pumped to furfural product tanks MT-602A/B. Furfural is transported to the shipping point by furfural product pumps PP-602 A/B/S.

Fusel oil product is pumped by fusel oil pump PP-405A/S to fusel oil storage tank MT-605. Fusel oil is transported to the shipping point by fusel oil export pump PP-605A/S.

Slops from the collection header in the acid hydrolysis unit are stored in slops tank MT-608 and transferred on flow control by slops transfer pump PP-608 back to sugar stripper feed tank MT-222. Slops are off-spec material collected after shutdown or upset conditions and are to be gradually reworked through the system.

Refined hydrolyzate from hydrolyzate cooler TT-206 is pumped to fermentation feed tank MT-604 at 122°C, a temperature selected to inhibit contamination by unwanted microbial growth. Air vent filter GF-604 mounted on the vent of MT-604 also prevents contamination from the atmosphere. Hydrolyzate is transported to Number 1 Fermenters MR-301A/B by fermentation feed pump PP-604A/S via fermentation feed cooler TT-604 which cools the hydrolyzate to 84°F using cooling water.

Aqueous furfural from MS-209 is transported by aqueous furfural pump PP-218A/S to azeo column surge tank MT-606. Aqueous furfural is then fed to azeo column preheater TY-501 by azeo column feed pump PP-606A/S.

Concentrated sulfuric acid delivered by truck or railcar is stored in sulfuric acid storage tank MT-603. Moisture from the atmosphere is kept from the acid by dessicant air filter GF-603 mcunted on the vent of MT-603. Sulfuric acid transfer pump PP-603A/S transports acid to sulfuric acid day tank MT-221.

Diesel fuel delivered by truck is stored in diesel fuel tank MT-609 which has a one month capacity. Fuel is delivered to mobile equipment by diesel fuel pump PP-609A/S.

Fire water tank MT-607 and fire water pump PP-607A/S are remotely located from the process units and offsite tankage.

Unit 700 - Waste Treatment

The environmental unit consists of three parts; an evaporation section, an anaerobic digestion and aerobic treatment section, and a low pressure vent system.

In the evaporation section, a three-stage evaporator is used to produce mixed solvents at 60% concentration in water to be burned as liquid fuels to produce steam. About half of the recovered condensate is recycled to the acid hydrolysis unit and about half is sent to anaerobic digestion.

Beer column bottoms pump PP-401A/S transports stillage to first effect evaporator GE-701 running at 14 psig. Heat for the first effect is provided by first effect heater TT-701 using 50 psig steam. Vapors from the first effect are condensed in second effect heater TT-702 which provides heat for second effect evaporator GE-702 running at 11 psia. Liquid is pumped from the first effect to the second effect on level control by first effect pump PP-701A/S. Similarly, second effect pump PP-702A/S feeds third effect evaporator GE-703 on level control and vapors from the second effect condense and provide heat for the third effect in third effect heater TT-703. Vapors from the third effect are condensed in evaporator condenser TT-704 using cooling water.

The pressure in the third effect is controlled at 3 psia by evaporator vacuum system PE-704 using 50 psig steam as the motive source and a pressure control bypass which allows steam back to the inlet to TT-704.

Liquid from the third effect, containing a mixture of about sixty percent organics and forty percent water, is pumped on level control to rotary filter GF-704 where precipitated salts are separated and sent to disposal. Solid-free liquid is then sent to mixed solvent tank MT-702 for storage.

Boiler feed water demineralizer regeneration effluent from GU-803A/B and boiler water blowdown from MS-802 are also treated by evaporation.

Condensate from the evaporators is collected in Hotwell Decanter MS-701 where liquid phase separation can occur. The organic layer overflows a baffle and is pumped on level control by solvent pump PP-706 A/S to solvent cooler TP-706, cooled by cooling water, and sent to MT-702. Waste water is pumped on interface level control by evaporator waste water pump PP-705 A/S to stillage cooler TT-705, cooled by cooling water. The temperature is controlled using a bypass line around TT-705. About half of the waste water is recycled to the acid hydrolysis unit as process water and the remaining waste water is sent to anaerobic treatment.

MT-702 contains mixed solvents collected from MS-502, MS-701, and GF-704. Solvent is transported by mixed solvent pump PP-707A/S to boilers HB-801A/B where the solvent is burned to produce high pressure steam.

In the anaerobic treatment section, the Celrobic process is used. Waste water (evaporator condensate from TT-705, flume washings from PP-101, and molecular sieve runoff from GZ-401) is collected in equalization tank MT-703 and kept blended by equalization tank eductors PE-711. Reactor feed pumps PP-708A/S pump waste water on flow control to reactor feed heater GU-705 which directly injects low pressure steam on temperature control. After mixing with recycled reactor effluent, the waste water is fed to anaerobic reactor MT-704. Ninety percent of the process effluent COD is removed in this high rate anaerobic digester. The digester produces methane gas which passes through off-gas suction knock-out pot MS-706 to off-gas blower PB-710. Off-gas is compressed and sent to off-gas knock-out drum MS-709. A split range pressure controller maintains the reactor outlet pressure by recycling compressed off-gas via off-gas cooler TT-701, cooled by cooling water, or making up with nitrogen. Excess system pressure will open a back pressure control valve allowing off-gas to pass into off-gas burner GQ-706 where it is flared.

Liquid effluent from MT-704 overflows into reactor surge drum MS-705 and is pumped on level control by reactor recycle pump PP-709 to biotreater MT-707. A portion is recycled to the reactor inlet.

The remaining COD is removed in the aerobic treatment section. Effluent from anaerobic treatment is combined with recycled underflow from the secondary clarifier and filtrate from the filtrate sump and fed to biotreater MT-707. The biotreater is aerated by aeration blowers PB-712A/S. Effluent from the biotreater is combined with sand filter backwash and enters secondary clarifier GV-708. Overflow from the clarifier is used as cooling tower makeup and is pumped on level control by final effluent pumps PP-717A/S.

A portion of the clarifier underflow is recycled on flow control as feed to the biotreater and the remainder is pumped on flow control by sludge pumps PD-713A/S to filter feed tank MS-708. Filter feed pump PD-714A/S mixes sludge with polymer mixer GA-711 and belt filter press separates solids for disposal. Filtrate is collected in filtrate sump MF-709 and recycled to the biotreater by filtrate sump pump PP-715.

Low pressure vents from all units are drawn into low pressure vent knock-out drum MS-710 to remove entrained liquids and transported by low pressure vent blower PB-717A/S to the firebox of boilers HB-801A/B where it is mixed with combustion air. The suction pressure of PB-717A/S is controlled using a pressure control bypass line.

Low Pressure Vents

Most of the low pressure process vents contain air or carbon dioxide saturated with water and small amounts of volatile organics. The air comes both from displacement during filling of vessels and from release of air trapped in pores in the wood. The organics are mostly ethanol and the extraneous material from wood such as torpenes and extractive resins. In our process modeling we characterized terpenes as alpha pinene and resins as fatty acids, specifically oleic acid. These would present odor problems if vented directly to the atmosphere. Scrubbing with water would be inadequate since alpha pinene and oleic acid are insoluble. Recovering such small amounts of organics by chilling and condensing is uneconomical. Therefore, it was decided to incinerate the vents by mixing them with combustion air in the boilers.

Unit 800 - Utilities

The utilities unit consists of the boilers and steam distribution system, the boiler feedwater system, the turbogenerator system, the cooling water system, the process water system, and the plant and instrument air system.

Boilers and Steam Distribution

The boilers HB-801A/B are designed to burn solid, liquid, and gaseous fuel byproducts from the process units in order to generate 1100 psia steam (900 psia, Alternative Case) for use in the process and for electrical power generation. Process requirements amount to 78% of the total available steam. Solid fuels comprise about 53% of total byproduct fuel heating valve. Liquid fuel, comprising about 46% of total fuel heating valve, is a mixture of solvents, sugar, acids, dissolved organic salts, and soluble tars in a 36% water mixture. Fuel gas comes from anaerobic digestion and comprises less than 1% of total heating value.

Gas and liquid fuels are burned directly but lignin and tar sludge from the acid hydrolysis unit is fed to a Flakt type drying system which dries and fluidizes the solids into the burners using boiler flue gas. No other solid fuel (such as coal) will be utilized as there is always an excess of byproduct fuel available over normal process unit energy requirements. Diesel fuel is used for startup.

Low pressure vents are collected, compressed, and injected into the boilers to mix with combustion air prior to burning. None of these vents contain an explosive mixture either singly or in combinations. They contain mostly air or carbon dioxide saturated with water and with very small amounts of organics.

Process users of 1100 psia steam are fed directly from the high pressure steam header. Users of 150 and 50 psig steam are supplied with steam letdown from 1100 psia through a turbogenerator. All recoverable condensate is returned to the boiler feedwater system.

Boiler Feedwater System

Boiler feedwater preparation consists of makeup process water demineralization, condensate polishing, deaeration, and chemical dosing.

Recoverable condensate is collected in condensate collection system GU-805 (package unit). Flashed low pressure steam is used in the deaerator. Condensate is then pumped through condensate polisher GU-804A/S to condensate surge drum MS-804. Makeup process water is introduced on level control via demineralizers GU-803A/B, a package unit consisting of anion and cation resin beds with intermediate degasifier and regeneration equipment. Deaerator GV-806 is fed by deaerator feed pump PP-809A/S on flow control reset by level control. The deaerator runs at 10 psig and expels air and steam to the atmosphere. Steam to the deaerator is fed on flow control and is supplied by flashes from recovered condensate and from boiler blowdown flash drum MS-802 and made up from the 50 psig steam header. Boiler blowdown is sent to evaporator GE-701 by blowdown pump PP-806A/S.

Demineralizer regenerant effluent is sent to evaporator GE-701.

Deaerated boiler feedwater is dosed with hydrazine and ammonia made up in hydrazine addition unit GU-807 and ammonia unit GU-808. BFW pump PP-808A/S feeds boilers HB-801A/B. The boiler steam drums are dosed with phosphate made up in phosphate addition unit GU-809. A shed encloses the three chemical additions units. Hydrazine is transferred from hydrazine drum MS-803 by hydrazine transfer pump PP-807 to be mixed with condensate in GU-807. Liquid ammonia from rented tanks is mixed with condensate in GU-808. Phosphate dumped from bags is mixed with condensate in GU-809. BFW chemicals are introduced into the boiler system by variable flow metering pumps.

Turbogenerator

Turbogenerator package unit GZ-811 is rated to take 1100 psia, 825°F steam and generate 45 mw of electricity. The unit includes a condenser, vacuum ejector set, and controls. 4% of the steam is let down in a topping cycle to 150 psig, 66% is let down to 50 psig, and the remainder is condensed at 89 mm Hg(A). Turbine condensate pump PP-810A/S returns condensate to the boiler feedwater system.

NOTE: The Alternative Case uses 900 psia steam.

Cooling Water System

Cooling tower GT-812 provides cooling water at 88°F with an allowable temperature rise of 30°F. Cooling water distribution is maintained at a pressure of 60 psig by cooling water pumps PP-812A-H. Cooling tower blowdown containing dissolved salts at 2000 ppm is discharged directly to the environment. Cooling tower blowdown contains zero COD.

Process Water System

Process water preparation consists of filtering well water pumped by well water pumps PP-813 A/B/S through a sand filter and anthracite bed GF-801. Process water transfer pump PP-802A/S feeds process water tank MT-801. Backwash feed pumps PP-804A/B provides a daily backwash flow to GF-801. Backwash overflow is collected in backwash transfer tank MF-805 and is transported by backwash transfer pumps PP-805A/S to clarifier GV-708. Process water is distributed via a process water ring main pressurized to 60 psig by process water circulating pump PP-803A/S.

Plant and Instrument Air Systems

Plant and instrument air are provided by air compressor PC-811 operating on pressure control from plant air receiver MS-806. Instrument air receiver MS-807 is fed via instrument air dryer GY-810.

Process Flow Diagrams

Process flow diagrams are given for the base case process (Design Case I) followed by plot plans for the base case plant.

Process flow diagrams for the hydrolysis reaction section of Design Case II are also included.

GY-108 WOOD CHIP TRUCK SCALE

GY-107 WOOD CHIP TRUCK UNLOADER

GY-109 WOOD CHIP RAIL CAR SCALE

GM-106A/B YARD SWITCHING ENGINES

GS-101 WOOD BUCKET CONVEYOR

B-8 TRUCK WEIGH SCALE HOUSE

GM-104 A/B/S FRONT END LOADERS

GF-103 CHIP PILE SCREEN

GS-102 JETBELT CONVEYOR

GS-105 MAGNETIC CHIP CLEANER

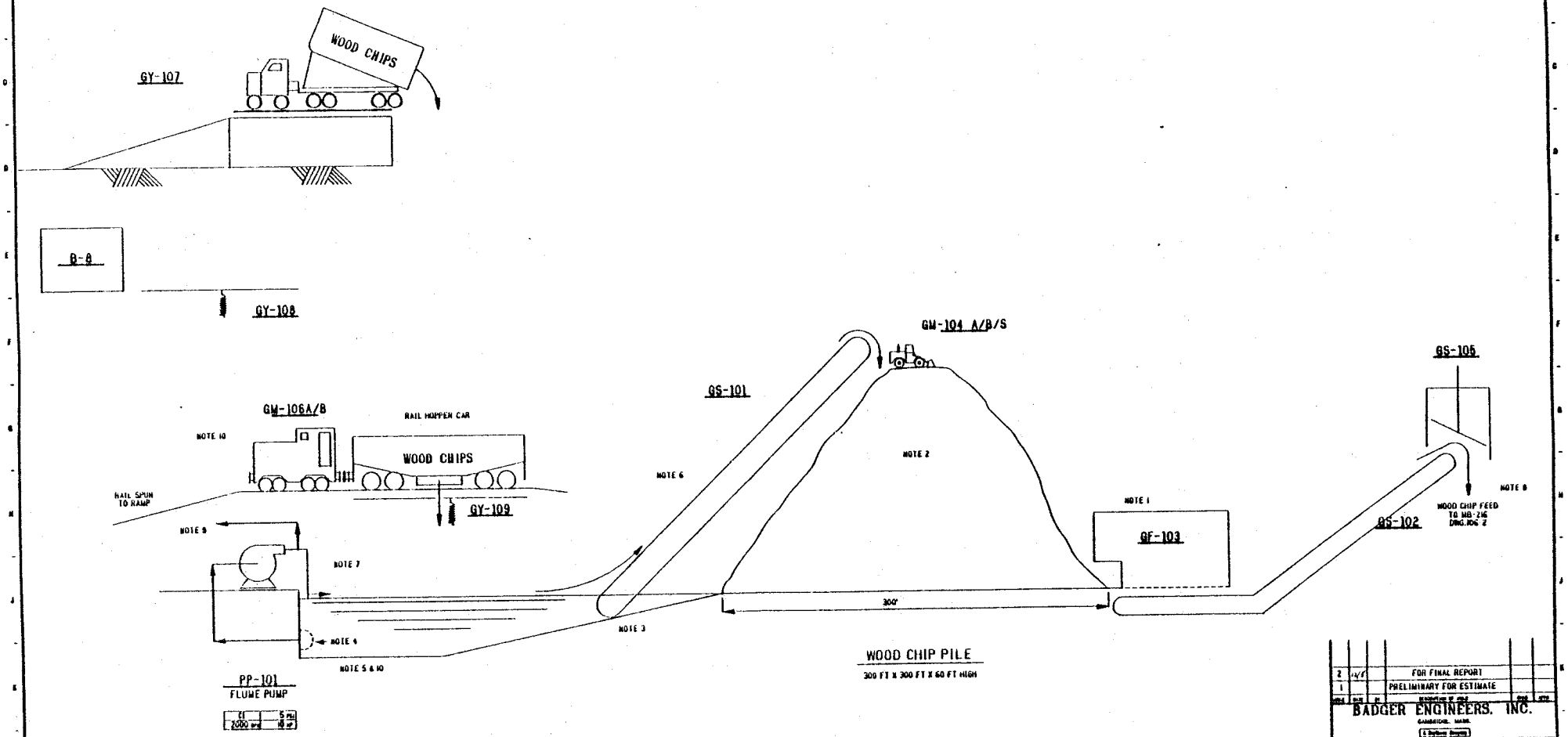

NOTES:

1. PILE IS "MANAGED" AND FED TO GS-102 USING TWO 121 FRONT END LOADERS.
2. APPROXIMATELY TWO WEEKS CHIP STORAGE.
3. 50 FT. LONG X 6 FT. DEEP X 50 FT. WIDE WASHING POND CONCRETE BASE
4. STRAINER ON PUMP FEED.
5. DEBRIS AND TRAMP MATERIAL CLEARED PERIODICALLY BY DRAINING POND AND USING FRONTEND LOADER.
6. BUCKET CONVEYOR TO ALLOW WATER DRAINAGE.
7. CIRCULATION PUMP PP-101 TO WASH FLOATING CHIPS TO CONVEYOR.
8. PERIODIC TRAMP IRON REMOVAL FROM MAGNET BY FRONT END LOADER.
9. PERIODIC DRAINAGE TO WASTE.
10. L.P. STEAM INJECTED DURING WINTER MONTHS TO PREVENT FREEZING.

BASE CASE 25MW GAL/YEAR

2		FOR FINAL REPORT	
1		PRELIMINARY FOR ESTIMATE	

BADGER ENGINEERS, INC.
CAMBRIDGE, MASS.

PROCESS FLOW DIAGRAM
WOOD CHIP FEED HANDLING
RECEIVING, STORAGE, FEEDING
SOLAR ENERGY RESEARCH INSTITUTE
GOLDEN COLORADO

SCALE: NONE
CERTIFIED
DATE

DWG. NO. E0461-106-1 2

GA-207 STATIC MIXER | II-207 ACID WATER HEATER | MB-216 CHIP FEED BIN | GG-202 A/B/C GRINDER | GS-201 A/B/C CHIP SCREW | GS-203 A/B/C WOOD GRINDS CONVEYOR | GY-229 OVERSIZE WOOD GRIND SCREEN | MB-217 GROUND WOOD BIN | GS-231 A/B WOOD GRINDS BELT FEEDER | GA-204 A/B HIGH PRESS FEEDER | MS-201 A/B SLURRY VESSEL | GA-206 A/B WOOD SLURRY AGITATOR | MR-202 A/B/S HYDROLYSIS REACTOR | MS-203 HIGH PRESS. FLASH DRUM | MS-204 LOW PRESS. FLASH DRUM | II-209 SLURRY COOLER

II-216 SLURRY VESSEL VENT CONDENSER | II-202 H.P. FLASH VAPOR AFTERCOOLER | II-201 PRIMARY FEED WATER PREHEATER | II-211 SECONDARY FEEDWATER PREHEATER | II-205 AQUEOUS FURFURAL COOLER | II-212 LP FLASH VAPOR AFTERCOOLER

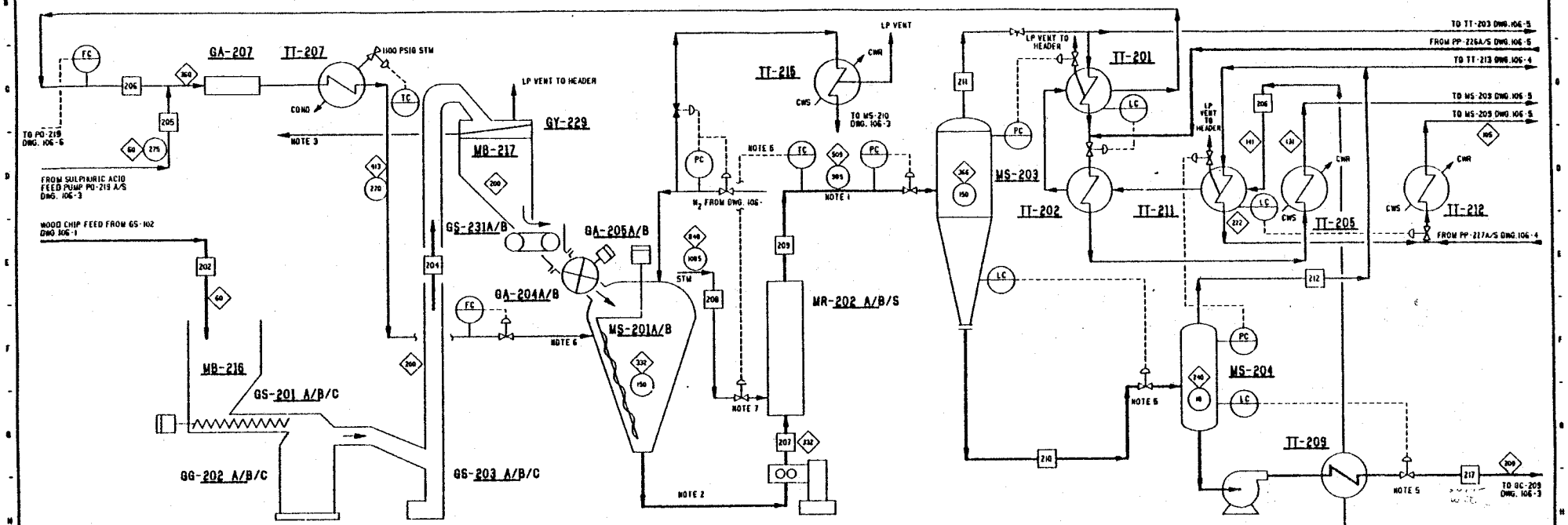

STREAM NO. / COMPONENTS	MW	202	204	208	206	207	208	209	210	211	212	217
WOOD (DRY)	800	162729	162729			162729						
FURFURAL	96							17019	6137	10882	3176	2961
ACETIC ACID	60							970 a	721	249	155	566
ALPHA-PINENE	136							3307 a	2643	664	421	2222
WATER	18	162729	162729		483116	645845	154819	810647	658508	152339	95210	563298
FORMIC ACID	46							827	720	107	85	635
LEVULINIC ACID	116							2094	2089	5		2089
HMF	126							13227	13227			13227
OLEIC ACID	282							3307 a	3306	1		3306
SULFURIC ACID	98			5004		5004		5004	5003	1		5003
LIGNIN	5000							40190 a	40190			40190
ASH	100							573	573			573
HEXOSE SUGARS	180							45855	45855			45855
ANHYDROPYRANOSE	162							13845	13845			13845
TAR (SOLUBLE)	400							11332	11332			2266
TAR (INSOLUBLE)	400											9066
CALCIUM HYDROXIDE	74											
CALCIUM FORMATE	130											
CALCIUM ACETATE	158											
GYPSUM	172											
CALCIUM LEVULINATE	270											
TOTAL - LB/HR.		325458	325458	5004	483116	813578	154819	968397	884149	164248	99047	705102
TOTAL - LB MOL/HR							8601			8581	5326	
GPM AT CONDITIONS				6	967	1674		2523	1850			1514

PD-201 A/B/S HYDROLYSIS FEED PUMP

PP-204 A/S LIGNIN SLURRY PUMP

NOTES:

1. TEFLON LINED C.S. FOR REACTOR EXIT PIPING.
2. ENTRANCE PIPING TO PD-201 12" DIAM. MINIMUM LENGTH
3. OVERSIZE RETURNED TO CHIP PILE VIA FRONT LOADER.
4. HIGH TEMP STEAM SHUT OFF AT 625° F.
5. 12" DURIRON CONTROL VALVE.
6. MINIMUM LENGTH
7. TANGENTIAL STEAM INLET

LEGEND:

◇ TEMPERATURE °F

○ PRESSURE, PSIG

□ STREAM NO.

TABLE STREAM FLOWS IN LB/HR.

BASE CASE 25MM GAL/YEAR

2	10/5	FOR FINAL REPORT
1		PRELIMINARY FOR ESTIMATE

BADGER ENGINEERS, INC.
CAMBRIDGE, MASS.

PROCESS FLOW DIAGRAM
ACID HYDROLYSIS UNIT 200 (SHEET 1 OF 6)
HYDROLYSIS REACTION
SOLAR ENERGY RESEARCH INSTITUTE

GOLDEN COLORADO

SCALE: NONE

CERTIFIED
DATE

DWG. NO. E0461-106-2 2

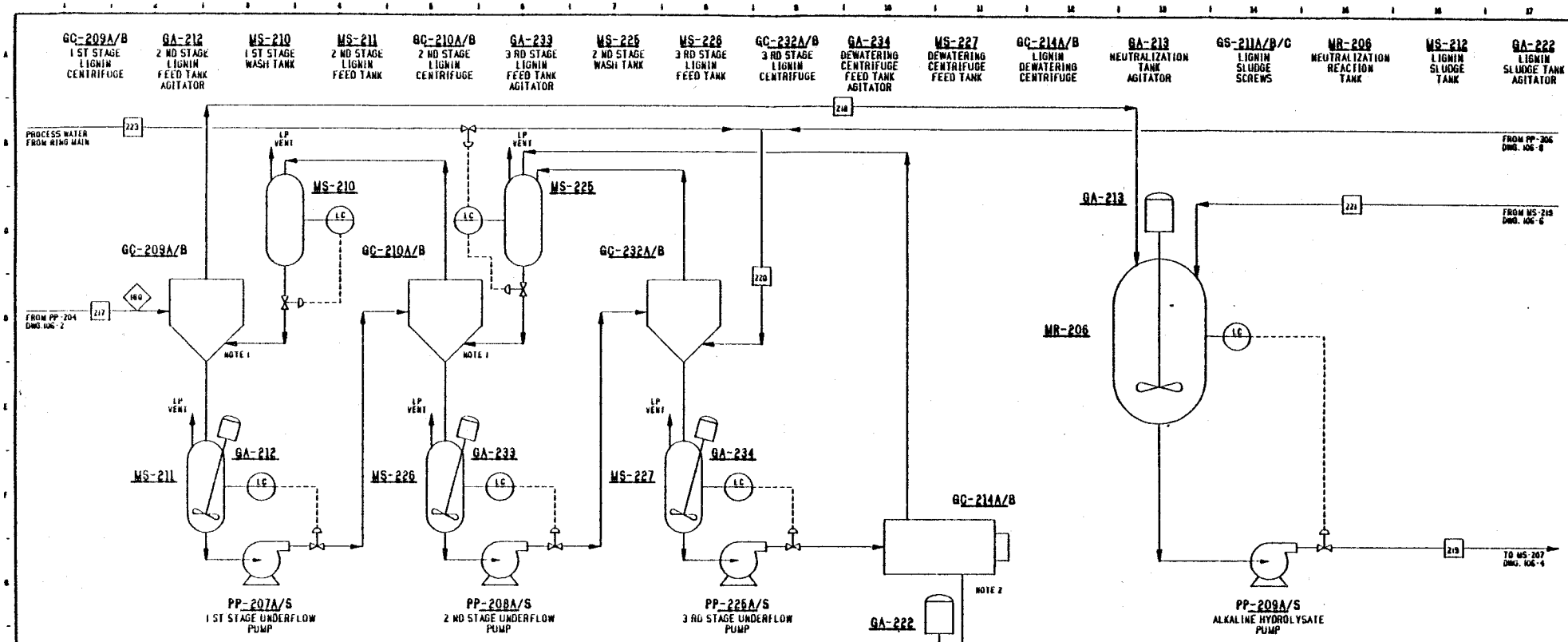

STREAM NO. / COMPONENTS	MW	217	218	219	220	221	222	223
WOOD (DRY)	800							
FURFURAL	96	2961	2954	3000		46	7	
ACETIC ACID	60	566	564				1	
ALPHA-PINENE	136	2222	2216	2251		35	6	
WATER	18	563298	651429	662530	136821	10470	48690	16557
FORMIC ACID	46	635	634				2	
LEVULINIC ACID	116	2089	2084	719		11	5	
HMF	126	13227	13194	13402		208	33	
OLEIC ACID	282	3306	3297	3349		51	8	
SULFURIC ACID	98	5003	4990				13	
LIGNIN	5000	40190					40190	
ASH	100	573	572	581		9	1	
HEXOSE SUGARS	180	45855	45400	46121		721	455	
ANHYDROPYRANOSE	162	13845	13810	14028		218	35	
TAR (SOLUBLE)	400	2266	2266					
TAR (INSOLUBLE)	400	9066		2266			9066	
CALCIUM HYDROXIDE	74					5067		
CALCIUM FORMATE	130			910		14		
CALCIUM ACETATE	158			755		12		
GYPSUM	172			8760				
CALCIUM LEVULINATE	270			1626		25		
TOTAL - LB/HR.		705102	743411	760298	136821	16887	98512	16557
TOTAL - LB MOL/HR								
GPM AT CONDITIONS		1450	1530	1565	275	35	180	33

LEGEND:

◇ TEMPERATURE °F

○ PRESSURE, PSIG

□ STREAM NO.

TABLE STREAM FLOWS IN LB/HR.

NOTES:

1. DISPLACEMENT WASH LIQUOR TO CENTRIFUGE BY GRAVITY FEED.
2. 50 % LIGNIN/TAR SLUDGE

BASE CASE 25MM GAL/YEAR

2	1/4		FOR FINAL REPORT
1			PRELIMINARY FOR ESTIMATE

BADGER ENGINEERS, INC.

PROCESS FLOW DIAGRAM

ACID HYDROLYSIS UNIT 200 (SHEET 2 OF 8)

LIGNIN SEPARATION AND WASHING

SOLAR ENERGY RESEARCH INSTITUTE

GOLDEN COLORADO

SCALE: NONE

CERTIFIED

DATE

DWG. NO. E0461-106-3 SHEET 2

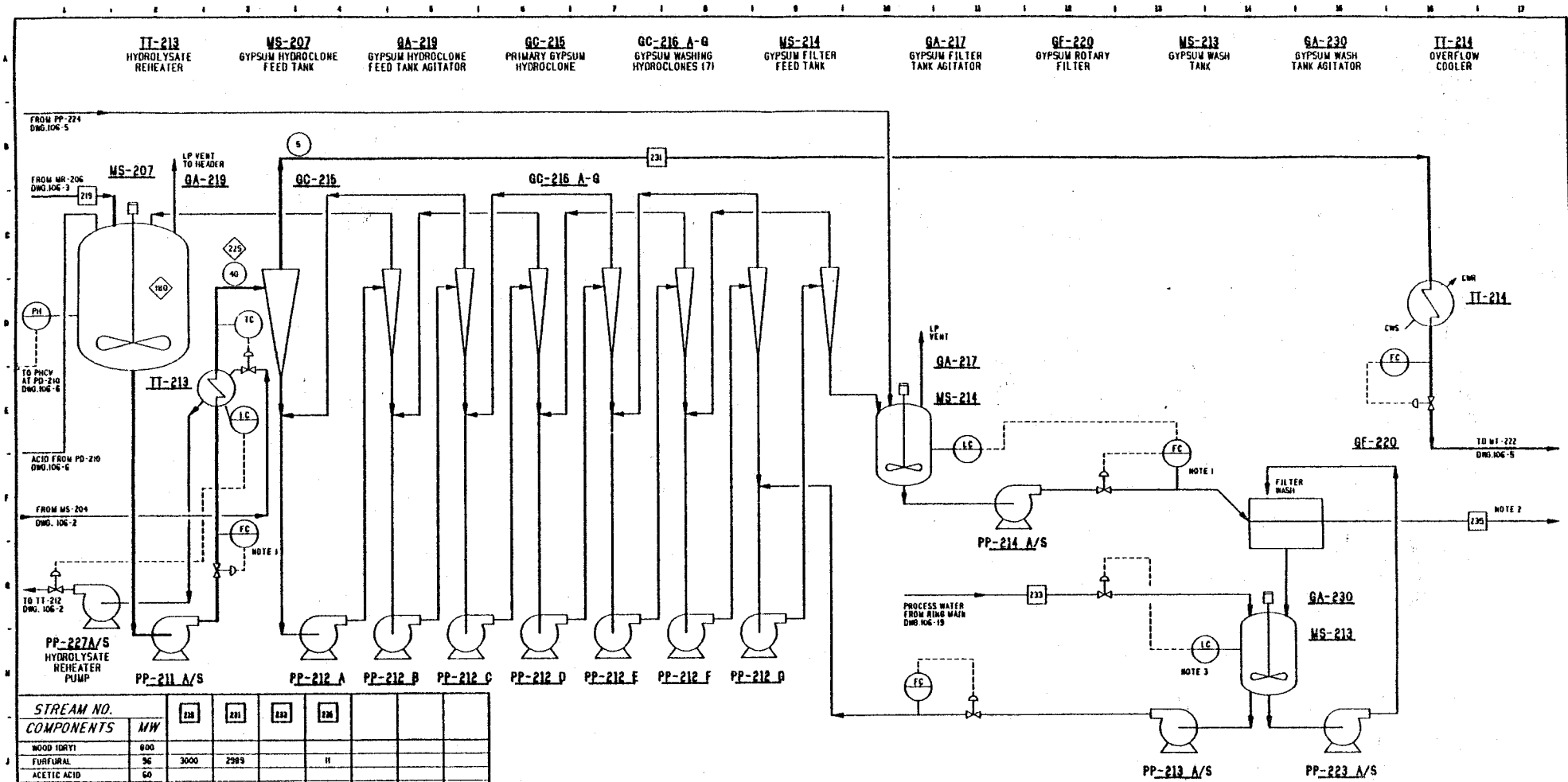

STREAM NO. / COMPONENTS	MW	219	231	233	235			
WOOD (DRY)	800							
FURFURAL	96	3000	2989		11			
ACETIC ACID	60							
ALPHA-PINENE	136	2251	2243		8			
WATER	18	662530	672755	15683	5458			
FORMIC ACID	46							
LEVULINIC ACID	116	719	716		3			
HMF	126	13402	13355		47			
OLEIC ACID	282	3349	3337		12			
SULFURIC ACID	98							
LIGNIN	5000							
ASH	100	581	579		2			
HEXOSE SUGARS	180	46121	45956		165			
ANHYDROPYRANOSE	162	14028	13979		50			
TAR (SOLUBLE)	400							
TAR (INSOLUBLE)	400	2266			2266			
CALCIUM HYDROXIDE	74							
CALCIUM FORMATE	130	910	906		3			
CALCIUM ACETATE	158	755	752		3			
GYPSUM	172	8760			8760			
CALCIUM LEVULINATE	270	1626	1621		6			
TOTAL - LB/HR.		760298	753188	15683	16794			
TOTAL - LB MOL/HR								
GPM AT CONDITIONS		1565	1524	31	27			

PP-211 A/S GYPSUM HYDROCLONE FEED PUMP

PP-212 A-G GYPSUM HYDROCLONE PUMPS

PP-214 A/S GYPSUM FILTER PUMP

PP-213 A/S GYPSUM WASH PUMP

PP-223 A/S GYPSUM FILTER WASH PUMP

NOTES:

1. MAGNETIC FLOW METER OR EQUIVALENT
2. GYPSUM CAKE DIRECT TO TRUCK OR STORAGE AREA
3. LEVEL CONTROL ABOVE MIN. LEVEL

LEGEND:

◇ TEMPERATURE °F

○ PRESSURE, PSIG

□ STREAM NO.

TABLE STREAM FLOWS IN LB/HR.

BASE CASE 25MM GAL/YEAR

2	12/8	FOR FINAL REPORT	
1		PRELIMINARY FOR ESTIMATE	

BADGER ENGINEERS, INC.

PROCESS FLOW DIAGRAM

ACID HYDROLYSIS UNIT 200 (SHEET 8 OF 5)

GYPSUM SEPARATION AND WASHING

SOLAR ENERGY RESEARCH INSTITUTE

GOLDEN COLORADO

SCALE: NONE

CERTIFIED

DATE

DWG. NO. E0461-106-4 SHEET 2

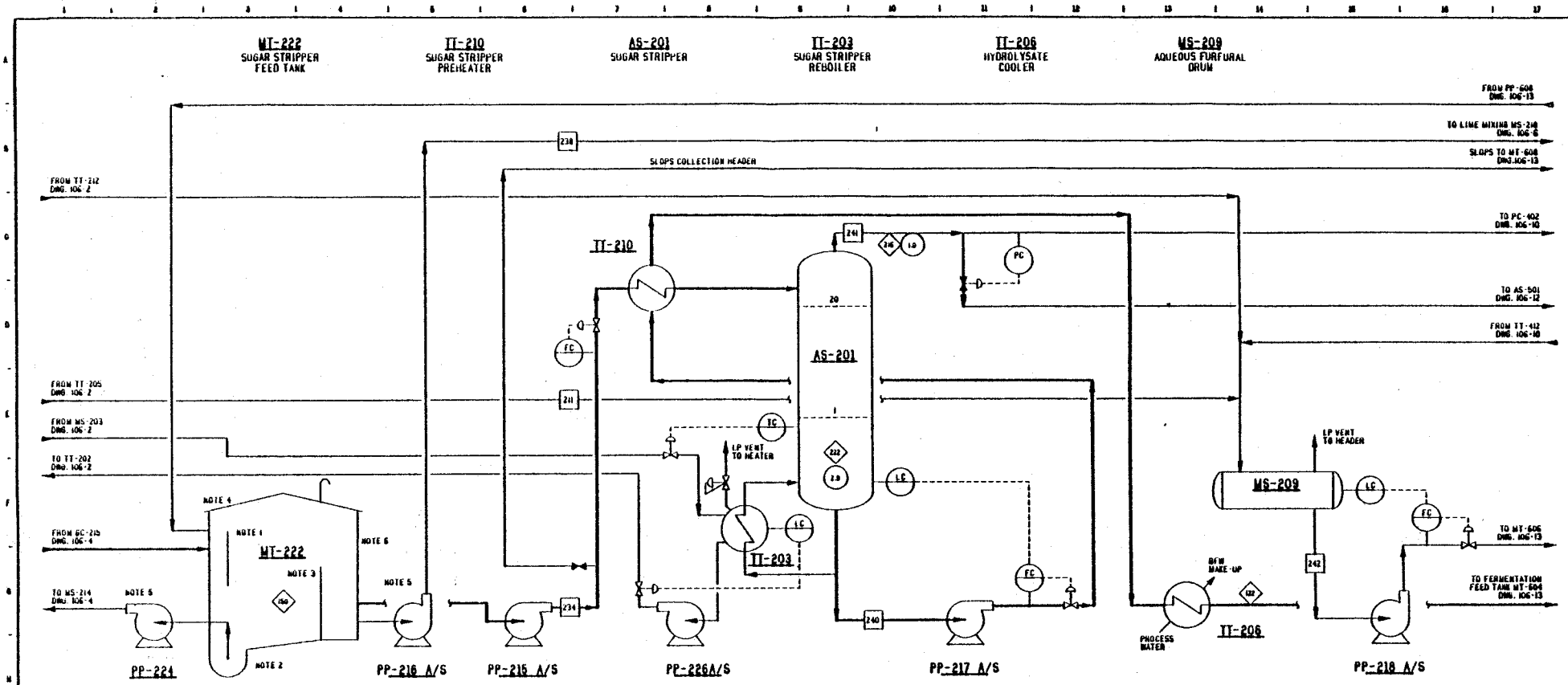

STREAM NO. / COMPONENTS	M/W	231	234	238	240	241	242	
WOOD (DRY)	800							
FURFURAL	96	10882	2543	46	635	2305	16367	
ACETIC ACID	60	245					404	
ALPHA-PINENE	136	664	2208	35	1514	294	1379	
WATER	18	152339	662285	10476	585943	76342	327605	
FORMIC ACID	46	107					152	
LEVULINIC ACID	116	5	705	11	705		5	
HMF	126		13147	208	13147			
OLEIC ACID	282	1	3285	52	3285		1	
SULFURIC ACID	98	1					1	
LIGNIN	5000							
ASH	100		570	9	570			
HEXOSE SUGARS	180		45736	720	45736			
ANHYDROPYRANOSE	162		13761	218	13760			
TAR (SOLUBLE)	400							
TAR (INSOLUBLE)	400							
CALCIUM HYDROXIDE	74							
CALCIUM FORMATE	130		892	14	892			
CALCIUM ACETATE	158		740	12	740			
GYPSUM	172							
CALCIUM LEVULINATE	270		1596	25	1596			
TOTAL - LB/HR.		164248	747368	11820	668423	78945	345954	
TOTAL - LB MOL/HR		8581				4264		
GPM AT CONDITIONS			1523	24	1370		707	

PP-224 SUMP PUMP
PP-216 A/S LIME SLURRY LIQUOR PUMP
PP-216 A/S SUGAR STRIPPER FEED PUMP
PP-226A/S SUGAR STRIPPER REBOILER PUMP
PP-217 A/S SUGAR STRIPPER PUMP
PP-218 A/S AQUEOUS FURFURAL PUMP

NOTES:

1. IMPINGEMENT BAFFLE SUPPORTED INTERNALLY.
2. 0.5" PER FT SLOPE TO SUMP. PERIODIC REMOVAL OF SUMP SOLIDS REQUIRED.
3. HYDROSTATICALLY BALANCED OUTLET BAFFLE.
4. MF-222 NORMALLY OPERATES HALF FULL.
5. INTERMITTENT BATCH OPERATION.
6. INCLUDE DRAW-OUT LINE FOR ANY IMMISCIBLE LAYER (NOT SHOWN).

LEGEND:

- TEMPERATURE °F
- PRESSURE, PSIG
- STREAM NO.

TABLE STREAM FLOWS IN LB/HR.

BASE CASE 25MM GAL/YEAR

2	1/75	FOR FINAL REPORT
1		PRELIMINARY FOR ESTIMATE

BADGER ENGINEERS, INC.
CAMBRIDGE, MASS.

PROCESS FLOW DIAGRAM
ACID HYDROLYSIS UNIT 200 (SHEET 4 OF 8)
SUGAR STRIPPING
SOLAR ENERGY RESEARCH INSTITUTE
GOLDEN, COLORADO

SCALE: NONE
CERTIFIED
DATE

DWG. NO. E0461-106-5 SHEET 2

MF-224	GS-223	MB-220	GC-227	GS-225	GS-226	MS-218	GA-224	MT-219 A/B	GA-228 A/B	MT-221	MT-223
LIME UNLOADING PIT	LIME UNLOADING CONVEYOR	LIME STORAGE BIN	LIME DUST CYCLONE	LIME SOLIDS FEEDER	LIME MIXING CONVEYOR	LIME MIX TANK	LIME MIX TANK AGITATOR	LIME SLURRY DAY TANKS	LIME SLURRY DAY TANK AGITATOR	SULPHURIC ACID DAY TANK	HYDROLYSIS PROCESS WATER TANK

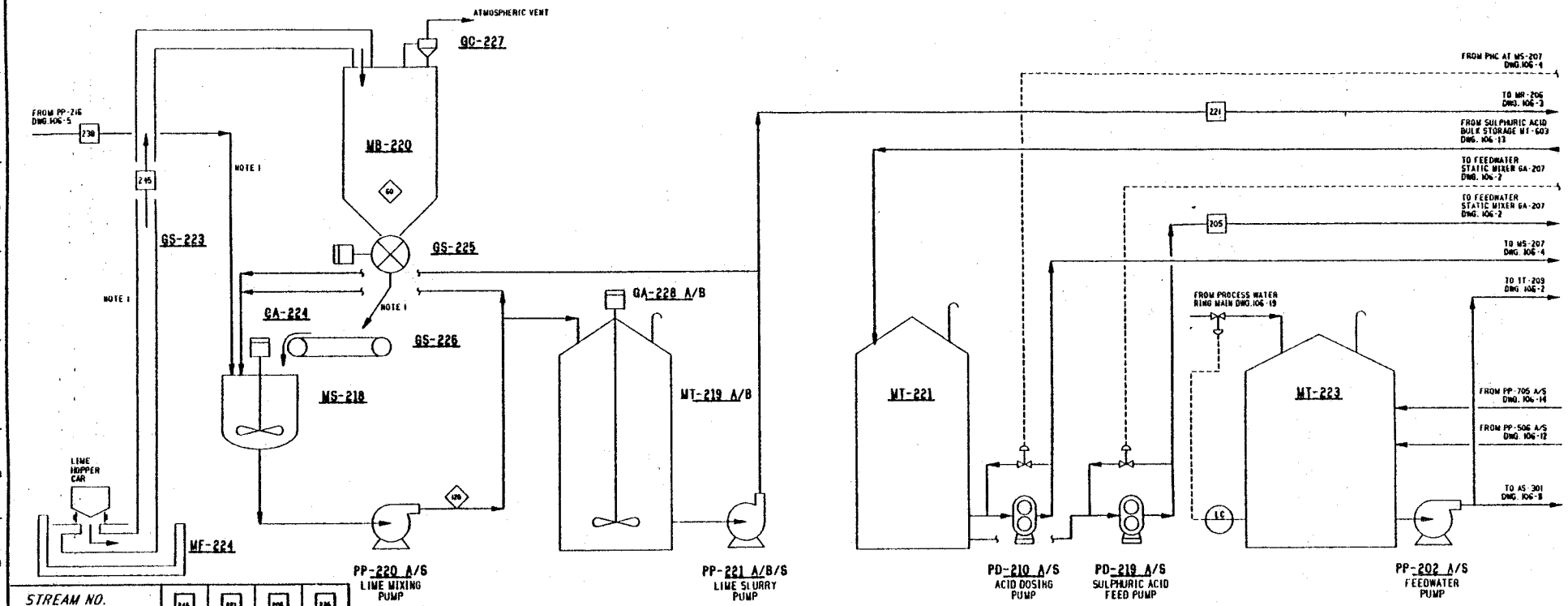

STREAM NO. / COMPONENTS	MW	246	221	208	226
WOOD (DRY)	800				
FURFURAL	96		46		46
ACETIC ACID	60				
ALPHA-PINENE	136		35		35
WATER	18		10470		10470
FORMIC ACID	46				
LEVULINIC ACID	116		11		11
HMF	126		208		208
OLEIC ACID	282		52		52
SULFURIC ACID	98			5004	
LIGNIN	5000				
ASH	100		9		9
HEXOSE SUGARS	180		720		720
ANHYDROPYRANOSE	162		218		218
TAR (SOLUBLE)	400				
TAR (INSOLUBLE)	400				
CALCIUM HYDROXIDE	74	5067	5067		
CALCIUM FORMATE	130		14		14
CALCIUM ACETATE	158		12		12
GYPSUM	172				
CALCIUM LEVULINATE	270		25		25
TOTAL - LB/HR.		5067	16887	5004	11820
TOTAL - LB MOL/HR					
GPM AT CONDITIONS			28	6	24

NOTES:

1. INTERMITTENT BATCH OPERATION.

LEGEND:

- TEMPERATURE °F
- PRESSURE, PSIG
- STREAM NO.

TABLE STREAM FLOWS IN LB/HR.

BASE CASE 25MW GAL/YEAR

2	7/15	FOR FINAL REPORT
1	5-1-79	PRELIMINARY FOR ESTIMATE

BADGER ENGINEERS, INC.
CAMBRIDGE, MASS.

PROCESS FLOW DIAGRAM
ACID HYDROLYSIS UNIT 200 (SHEET 6 OF 6)
LIME AND SULPHURIC ACID PREPARATION
SOLAR ENERGY RESEARCH INSTITUTE
GOLDEN COLORADO

SCALE: NONE
CERTIFIED
DATE

DWG. NO. E0461-106-6 | 2

GA-305 PBM TANK AGITATOR | MS-305 A/B PBM TANK | MS-304 AIR RECEIVER | TP-304 AIR HEATER | GF-301 / GF-302 AIR FILTER | MR-301 A/B NO. 1 FERMENTOR | GF-303 A/B NO. 1 AUTO STRAINER | TY-302 A/B NO. 1 BROTH COOLER | MR-302 A/B NO. 2 FERMENTOR | GF-304 A/B NO. 2 AUTO STRAINER | TY-303 A/B NO. 2 BROTH COOLER | MF-306 BLOWDOWN PIT | GY-318 EMERGENCY CHILLER (PACKAGE UNIT)

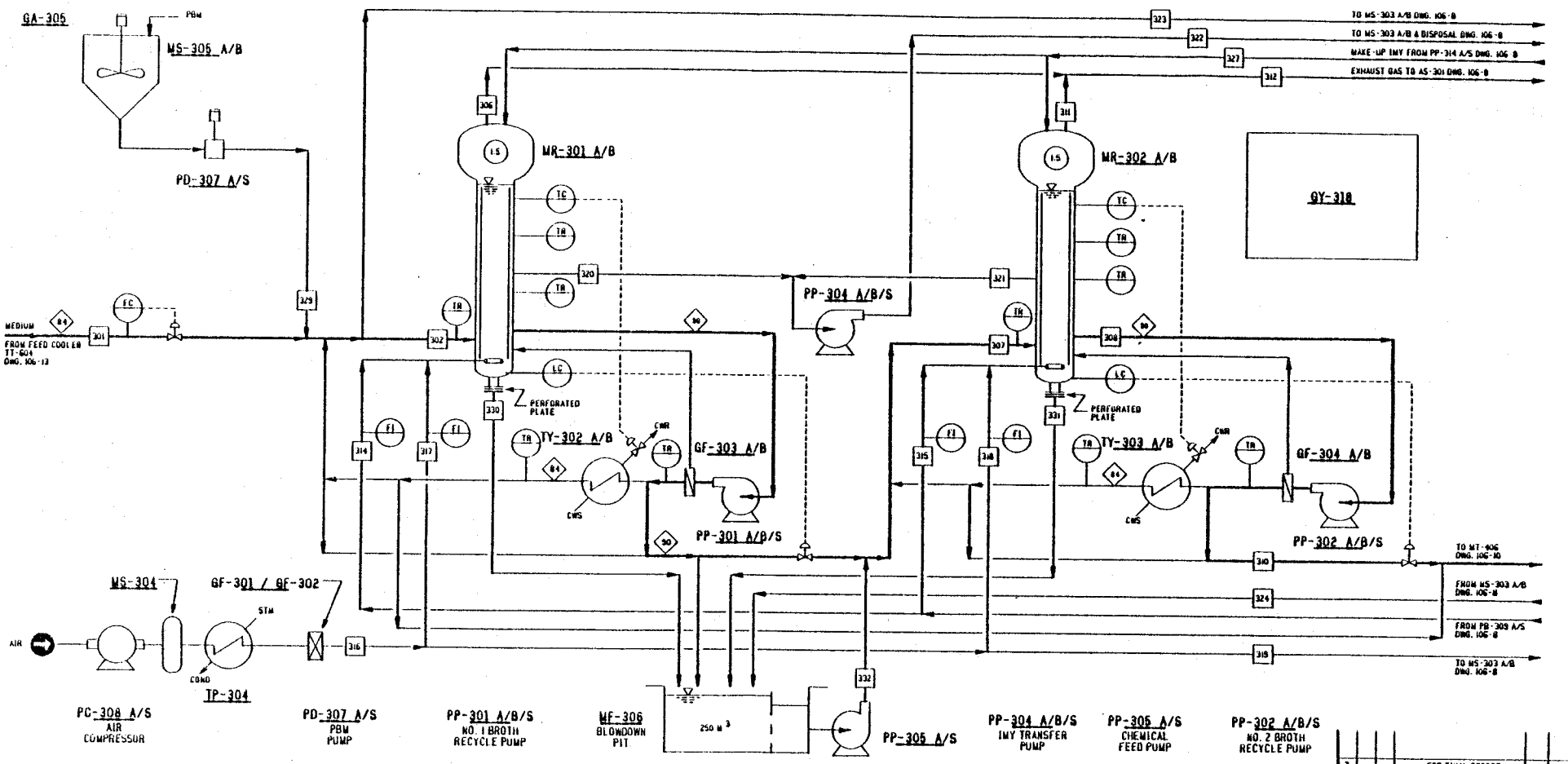

PC-308 A/S AIR COMPRESSOR | PD-307 A/S PBM PUMP | PP-301 A/B/S NO. 1 BROTH RECYCLE PUMP | MF-306 BLOWDOWN PIT | PP-305 A/S | PP-304 A/B/S IMY TRANSFER PUMP | PP-305 A/S CHEMICAL FEED PUMP | PP-302 A/B/S NO. 2 BROTH RECYCLE PUMP

UNSTABLE OPERATION

STREAM NO. / COMPONENTS	MW	301	302				306	307	308		310	311	312		314	315	316	317	318	319	320	321	322	323	324	327	328	330	331	332
ALCOHOL	46	0	7645					15422	18141		21749																			
SUGAR	180	45236	78597					6377	765		917																			
WATER	18	585542	570078					450805	450809		588474																			
OTHERS	–	37244	38657					33659	33758		40351																			
CO_2	44						9775					8033	17808		1525	1525										600				
AIR	29						400					400	800														600			
TOTAL - LB/HR		668422	674979				10168	546264	543513		650614	8433	18608		1525	1525	1599	400	400	100										
TOTAL - LB MOL/HR							236					192	423		35	35	55	14	14	3						1200				
GPM AT CONDITIONS		1341	1311					1110	1105		1325										430	430	430	69	430	285	2.5		256	

BASE CASE 26MM GAL/YEAR

LEGEND:
- TEMPERATURE °F
- PRESSURE, PSIG
- STREAM NO.

TABLE STREAM FLOWS IN LB/HR.

NO.	BY	DESCRIPTION OF ISSUE	DATE	APP.
2	MS	FOR FINAL REPORT		
1		PRELIMINARY FOR ESTIMATE		

BADGER ENGINEERS, INC.
CAMBRIDGE, MASS.

PROCESS FLOW DIAGRAM
FERMENTATION UNIT 300 (SHEET 1 OF 8)
FERMENTATION
SOLAR ENERGY RESEARCH INSTITUTE
GOLDEN COLORADO

SCALE: NONE
CERTIFIED DATE
DWG. NO. E0461-106-7 ISSUE 2

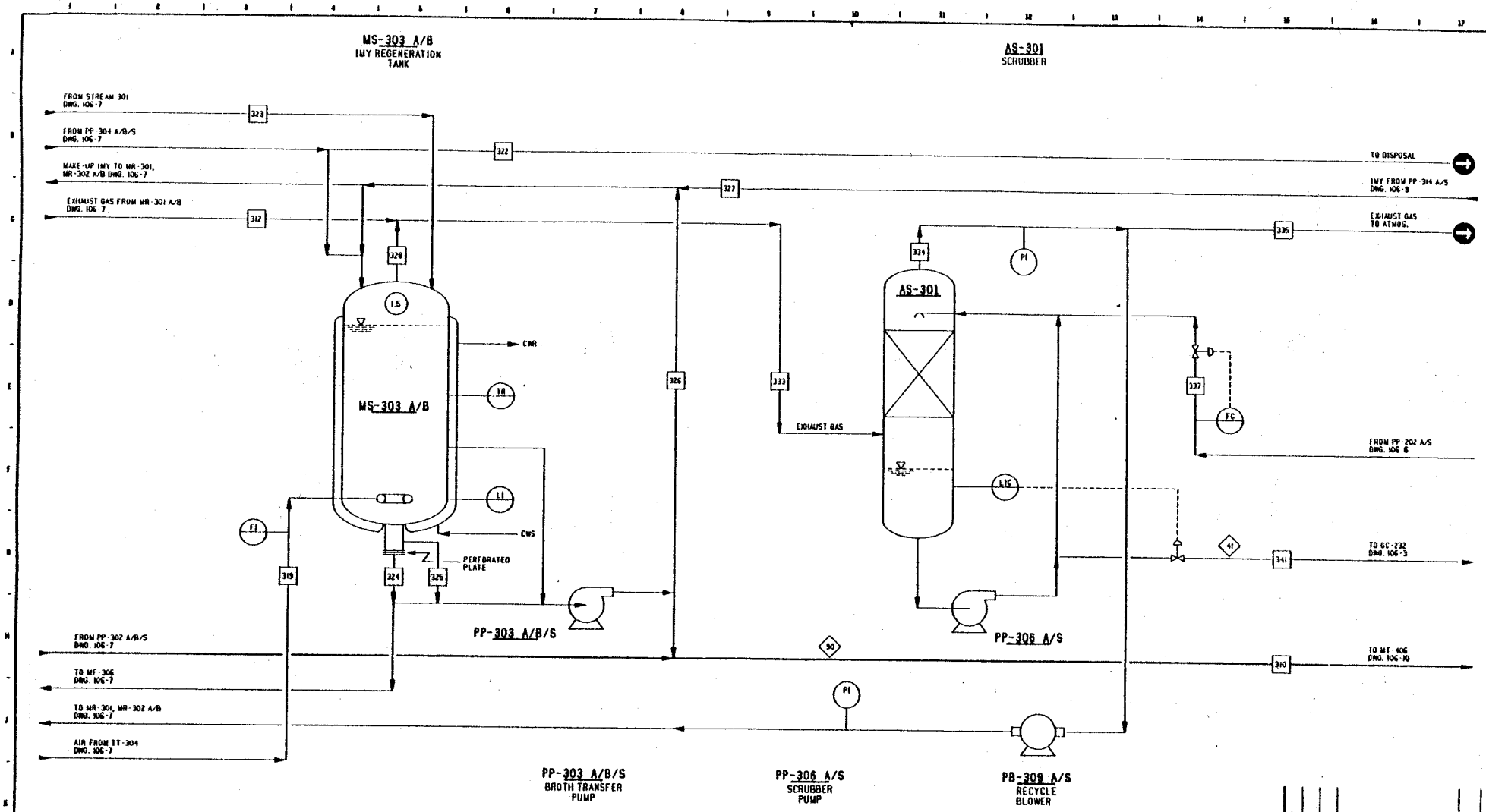

UNSTABLE OPERATION

STREAM NO.		308	312		319	322	323	324	325	326	327	328	333	334	326		337			341	
COMPONENTS	MW																				
ALCOHOL		21755																			
SUGAR		917																			
WATER		58858															115078			120264	
OTHERS		40532																			
CO_2			14050									2063	28101	28101	19871						
AIR			800		100								1599	1599	1599						
TOTAL - LB/HR.		651785	14850		100							2063	29700	29700	21470		115078			120264	
TOTAL - LB MOL/HR			347		3							47	694	694	488						
GPM AT CONDITIONS		1325				438	63	438	438	438	285						230			240	

2	7/15	FOR FINAL REPORT
1		PRELIMINARY FOR ESTIMATE

BADGER ENGINEERS, INC.
CAMBRIDGE, MASS.

PROCESS FLOW DIAGRAM
FERMENTATION UNIT 300 (SHEET 2 OF 3)
IMY REGENERATION
SOLAR ENERGY RESEARCH INSTITUTE
GOLDEN COLORADO

SCALE: NONE
CERTIFIED DATE

DWG. NO. E0461-106-8 2

MS-311 RESIN TANK
GA-314 RESIN TANK AGITATOR
MS-312 YEAST LIQUID TANK
GA-315 YEAST LIQUID TANK AGITATOR
GA-311 LINE MIXER
MS-313 ALGINATE TANK
GA-316 ALGINATE TANK AGITATOR
GZ-312 YEAST IMMOBILIZING UNIT (PACKAGE UNIT)
GY-313 CHILLER UNIT
MS-314 CA-TANK
GA-317 CA-TANK AGITATOR

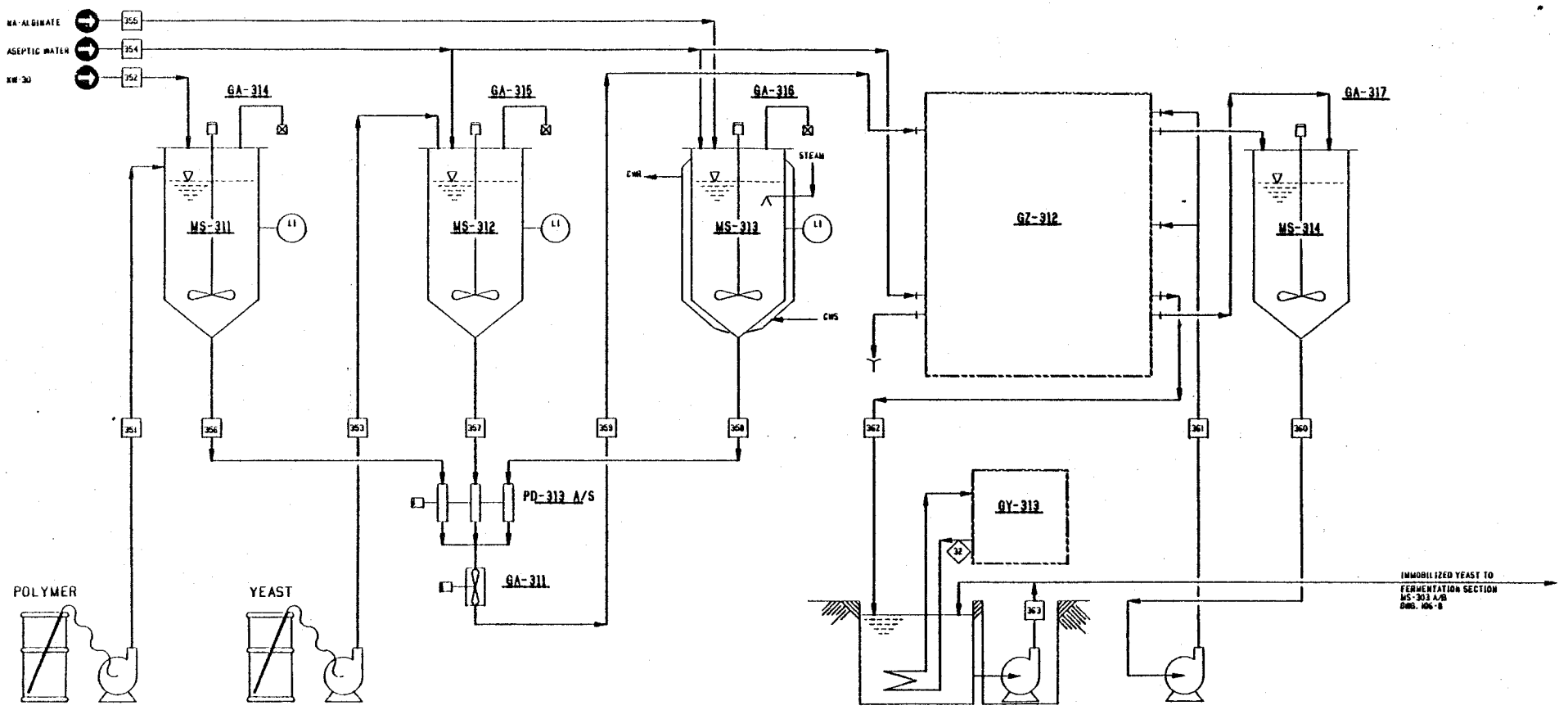

STREAM NO. / COMPONENTS	MW	351	352	353	354	355	356	357	358	359	360	361	362	363		
POLYMER		1143					36			36						
KM-30							0.35			0.35						
YEAST				286				1.79		1.79						
WATER		1715		2574	1127		54	25	26.3	405	534	267	123			
SODIUM ALGINATE									0.53	0.53						
CALCIUM CHLORIDE											16.1	8.1				
TOTAL		2858		2860	1127		90.4	26.8	26.8	143.7	550	275	192	41000		
GPM		5		6	2		0.17	0.05	0.05	0.28	1.1	0.55	0.61	82		
BATCH OPERATION																

LEGEND:
- ◇ TEMPERATURE °F
- ○ PRESSURE, PSIG
- □ STREAM NO.

TABLE STREAM FLOWS IN LB/HR.

BASE CASE 25MM GAL/YEAR

NO.	DATE	DESCRIPTION
2	1/15	FOR FINAL REPORT
1		PRELIMINARY FOR ESTIMATE

BADGER ENGINEERS, INC.
CAMBRIDGE, MASS.

PROCESS FLOW DIAGRAM
FERMENTATION UNIT 300 (SHEET 3 OF 3)
IMY PRODUCTION
SOLAR ENERGY RESEARCH INSTITUTE
GOLDEN COLORADO

SCALE: NONE
CERTIFIED
DATE

DWG. NO. E0461-106-9 SHEET 2

MT-406
DILUTE BEER FEED TANK

II-402
DEGASSER DRUM CONDENSER

MS-401
DEGASSER DRUM

AS-401
BEER COLUMN

TT-403 A/B
BEER COLUMN REBOILERS

II-412
AQUEOUS FURFURAL COOLER

II-413
FEED PREHEATER

II-406
BEER COLUMN CONDENSER

MS-402
BEER COLUMN REFLUX DRUM

II-406
BEER COLUMN VENT CONDENSER

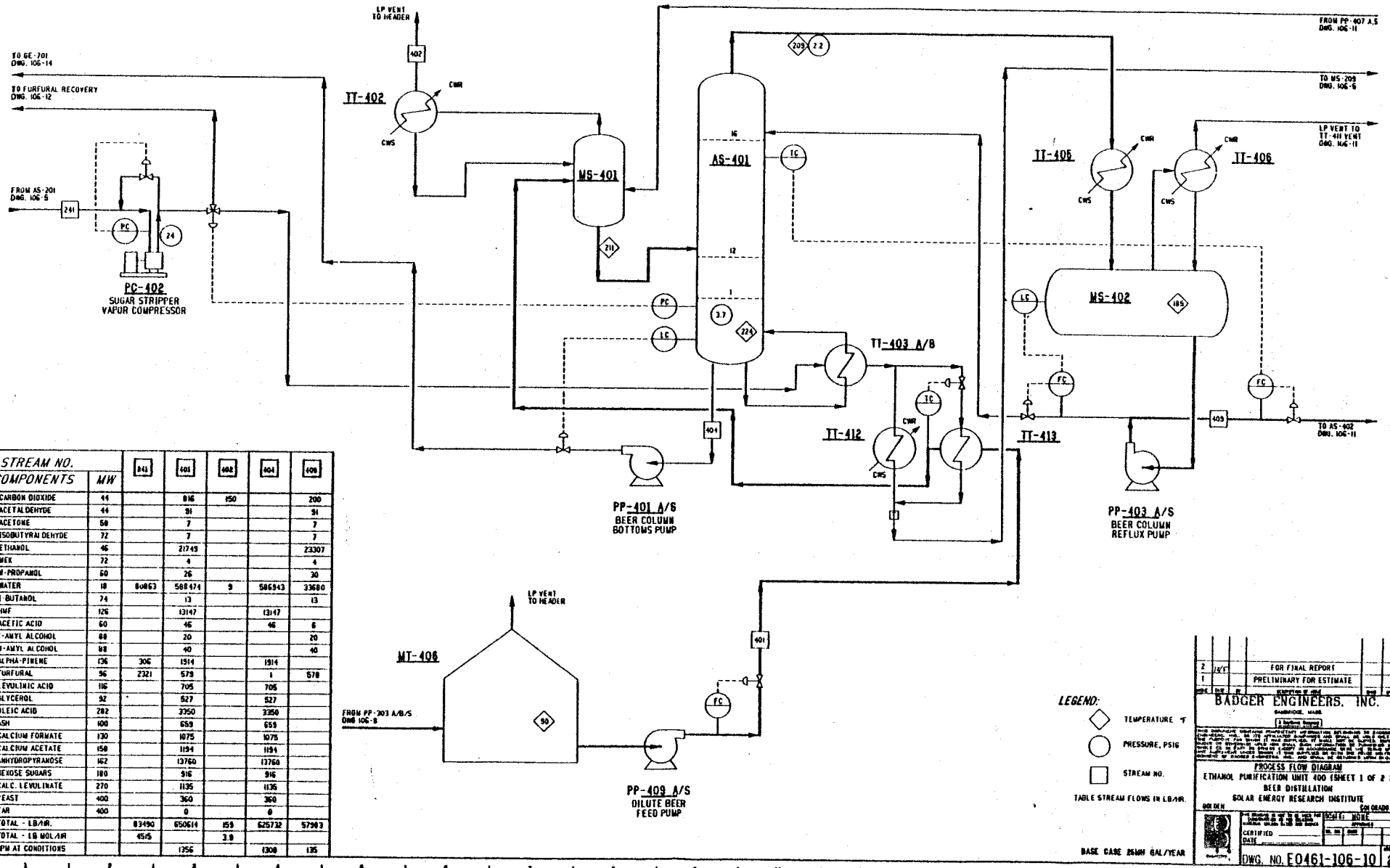

STREAM NO. / COMPONENTS	MW	241	401	402	404	409
CARBON DIOXIDE	44		816	150		200
ACETALDEHYDE	44		91			91
ACETONE	58		7			7
ISOBUTYRALDEHYDE	72		7			7
ETHANOL	46		23749			23307
MEK	72		4			4
N-PROPANOL	60		26			30
WATER	18	80863	588474	9	586943	33680
I-BUTANOL	74		13			13
HMF	126		13147		13147	
ACETIC ACID	60		46		46	6
I-AMYL ALCOHOL	88		20			20
N-AMYL ALCOHOL	88		40			40
ALPHA-PINENE	136	306	1914		1914	
FURFURAL	96	2321	579		1	578
LEVULINIC ACID	116		705		705	
GLYCEROL	92		527		527	
OLEIC ACID	282		3350		3350	
ASH	100		659		659	
CALCIUM FORMATE	130		1075		1075	
CALCIUM ACETATE	158		1194		1194	
ANHYDROPYRANOSE	162		13760		13760	
HEXOSE SUGARS	180		916		916	
CALC. LEVULINATE	270		1135		1135	
YEAST	400		360		360	
TAR	400		0		0	
TOTAL - LB/HR.		83490	650614	159	625732	57963
TOTAL - LB MOL/HR		4515		3.9		
GPM AT CONDITIONS			1356		1308	135

LEGEND:
- TEMPERATURE °F
- PRESSURE, PSIG
- STREAM NO.

TABLE STREAM FLOWS IN LB/HR.

BASE CASE 25MM GAL/YEAR

2	12/87	FOR FINAL REPORT
1		PRELIMINARY FOR ESTIMATE

BADGER ENGINEERS, INC.
CAMBRIDGE, MASS.

PROCESS FLOW DIAGRAM
ETHANOL PURIFICATION UNIT 400 (SHEET 1 OF 2)
BEER DISTILLATION
SOLAR ENERGY RESEARCH INSTITUTE
GOLDEN COLORADO

SCALE: NONE
CERTIFIED
DATE

DWG. NO. E0461-106-10 2

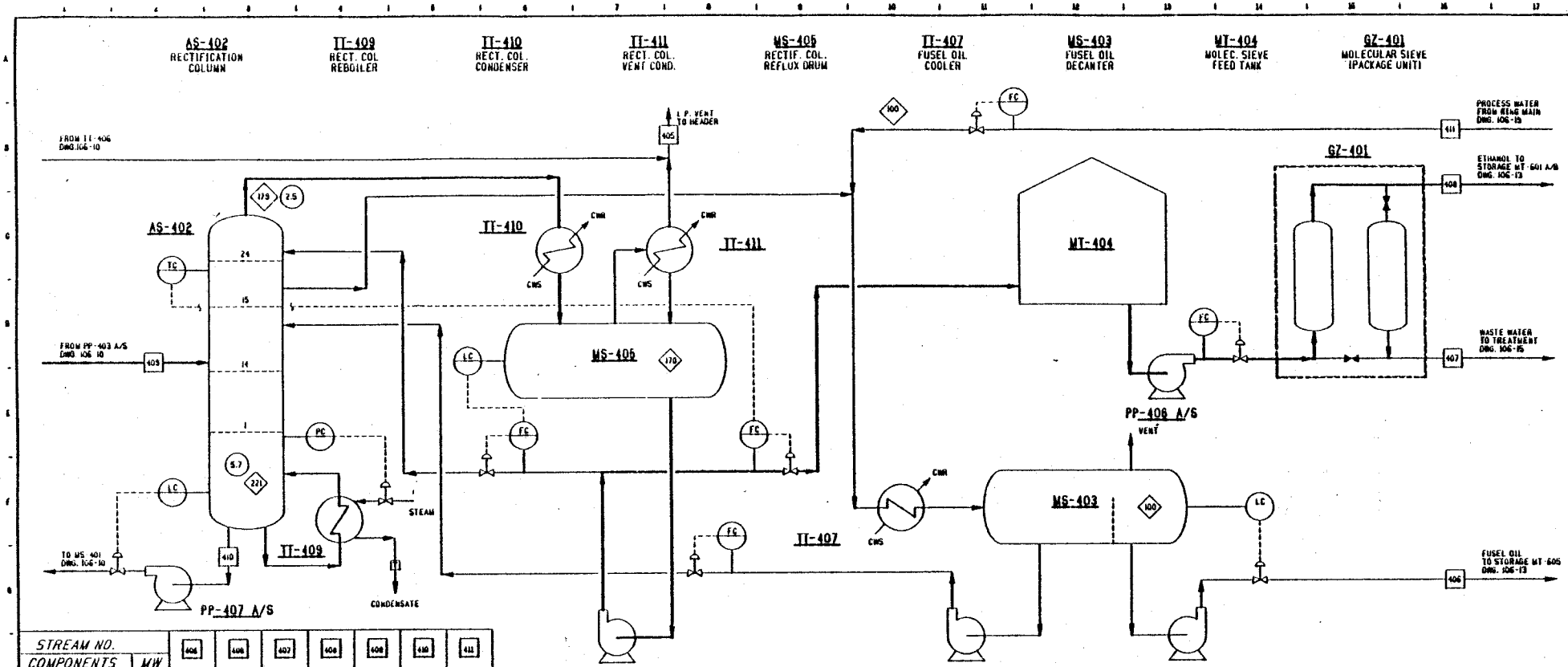

STREAM NO. / COMPONENTS	MW	406	408	407	408	408	410	411
CARBON DIOXIDE	44	666				200		
ACETALDEHYDE	44	2			89	91		
ACETONE	58	1			6	7		
ISOBUTYRALDEHYDE	72				7	7		
ETHANOL	46	100	100		21549	23307	1658	
MEK	72				4	4		
N-PROPANOL	60		25		1	30	5	
WATER	18	8	54	1954		33680	45633	494
I-BUTANOL	74		13			13		
HMF	126							
ACETIC ACID	60					6	9	
I-AMYL ALCOHOL	88		20			20		
N-AMYL ALCOHOL	88		40			40		
ALPHA-PINENE	136							
FURFURAL	96		578			578		
LEVULINIC ACID	116							
GLYCEROL	92							
OLEIC ACID	282							
ASH	100							
CALCIUM FORMATE	130							
CALCIUM ACETATE	158							
ANHYDROPYRANOSE	162							
HEXOSE SUGARS	180							
CALC. LEVULINATE	270							
YEAST	400							
TAR	400							
TOTAL - LB/HR		777	830	1954	21656	57983	47305	494
TOTAL - LB MOL/HR		17						
GPM AT CONDITIONS			1.5	4	55	135	105	1

LEGEND:

◇ TEMPERATURE °F

○ PRESSURE, PSIG

□ STREAM NO.

TABLE STREAM FLOWS IN LB/HR.

BASE CASE 25MM GAL/YEAR

2	1/4/5	FOR FINAL REPORT
1		PRELIMINARY FOR ESTIMATE

BADGER ENGINEERS, INC.

PROCESS FLOW DIAGRAM

ETHANOL PURIFICATION UNIT 400 (SHEET 2 OF 2)

RECTIFICATION AND DEHYDRATION

SOLAR ENERGY RESEARCH INSTITUTE

GOLDEN COLORADO

SCALE: NONE

CERTIFIED

DATE

DWG. NO. E0461-106-11 2

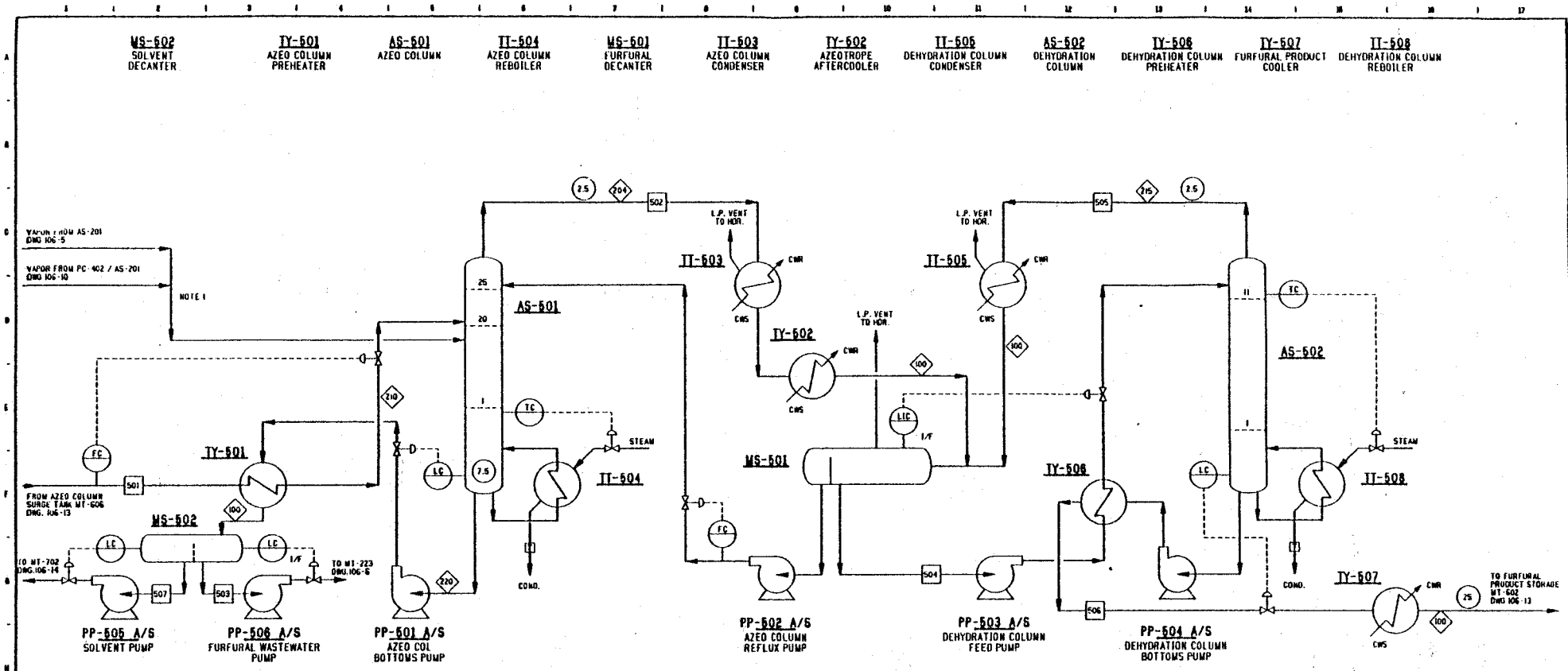

STREAM NO. / COMPONENTS	MW	501	502	503	504	505	506	507	
WOOD (DRY)	800								
FURFURAL	96	16367	16203	164	16203		16203		
ACETIC ACID	60	404		404					
ALPHA-PINENE	136	1379		394				985	
WATER	18	323891	30091	323810	3087	3006	81		
FORMIC ACID	46	192		192					
LEVULINIC ACID	116	5		5					
HMF	126								
OLEIC ACID	282	1		1					
SULFURIC ACID	98	1		1					
LIGNIN	5000								
ASH	100								
HEXOSE SUGARS	180								
ANHYDROPYRANOSE	162								
TAR (SOLUBLE)	400								
TAR (INSOLUBLE)	400								
CALCIUM HYDROXIDE	74								
CALCIUM FORMATE	130								
CALCIUM ACETATE	158								
GYPSUM	172								
CALCIUM LEVULINATE	270								
TOTAL - LB/HR.		342240	46294	324971	19290	3006	16284	985	
TOTAL - LB MOL/HR			1852			167			
GPM AT CONDITIONS		710		693	38		25	2	

NOTES:
1. UPSET OPERATION.

LEGEND:
- TEMPERATURE °F
- PRESSURE, PSIG
- STREAM NO.

TABLE STREAM FLOWS IN LB/HR.

BASE CASE 25MM GAL/YEAR

2	12/85	FOR FINAL REPORT
1		PRELIMINARY FOR ESTIMATE

BADGER ENGINEERS, INC.
CAMBRIDGE, MASS.

PROCESS FLOW DIAGRAM
FURFURAL RECOVERY UNIT 500
AZEO AND DEHYDRATION
SOLAR ENERGY RESEARCH INSTITUTE
GOLDEN

SCALE: NONE
CERTIFIED
DATE

DWG. NO. E0461-106-12 | 2

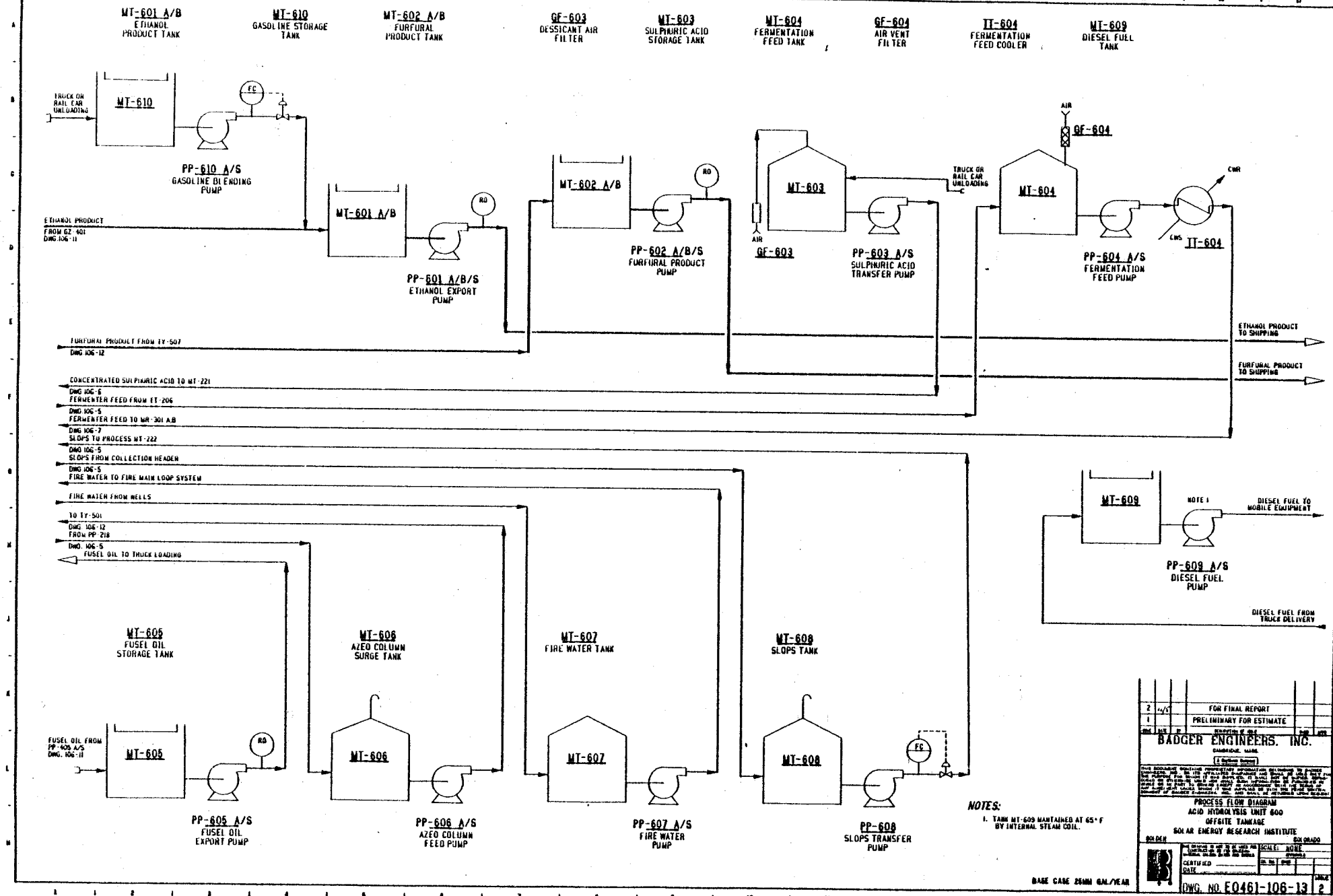
MT-601 A/B
ETHANOL PRODUCT TANK
MT-610
GASOLINE STORAGE TANK
MT-602 A/B
FURFURAL PRODUCT TANK
GF-603
DESSICANT AIR FILTER
MT-603
SULPHURIC ACID STORAGE TANK
MT-604
FERMENTATION FEED TANK
GF-604
AIR VENT FILTER
IT-604
FERMENTATION FEED COOLER
MT-609
DIESEL FUEL TANK
TRUCK OR RAIL CAR UNLOADING
MT-610
PP-610 A/S
GASOLINE BLENDING PUMP
ETHANOL PRODUCT FROM GZ-401 DWG 106-11
MT-601 A/B
PP-601 A/B/S
ETHANOL EXPORT PUMP
MT-602 A/B
PP-602 A/B/S
FURFURAL PRODUCT PUMP
AIR
GF-603
MT-603
PP-603 A/S
SULPHURIC ACID TRANSFER PUMP
TRUCK OR RAIL CAR UNLOADING
AIR
GF-604
MT-604
PP-604 A/S
FERMENTATION FEED PUMP
CWR
CWS
IT-604
ETHANOL PRODUCT TO SHIPPING
FURFURAL PRODUCT TO SHIPPING
FURFURAL PRODUCT FROM TY-507 DWG 106-12
CONCENTRATED SULPHURIC ACID TO MT-221
DWG 106-6
FERMENTER FEED FROM ET-206
DWG 106-5
FERMENTER FEED TO MR-301 A,B
DWG 106-7
SLOPS TO PROCESS MT-222
DWG 106-5
SLOPS FROM COLLECTION HEADER
DWG 106-5
FIRE WATER TO FIRE MAIN LOOP SYSTEM
FIRE WATER FROM WELLS
TO TY-501
DWG 106-12
FROM PP-218
DWG. 106-5
FUSEL OIL TO TRUCK LOADING
MT-609
NOTE 1
DIESEL FUEL TO MOBILE EQUIPMENT
PP-609 A/S
DIESEL FUEL PUMP
DIESEL FUEL FROM TRUCK DELIVERY
MT-605
FUSEL OIL STORAGE TANK
MT-606
AZEO COLUMN SURGE TANK
MT-607
FIRE WATER TANK
MT-608
SLOPS TANK
FUSEL OIL FROM PP-405 A/S DWG. 106-11
MT-605
PP-605 A/S
FUSEL OIL EXPORT PUMP
MT-606
PP-606 A/S
AZEO COLUMN FEED PUMP
MT-607
PP-607 A/S
FIRE WATER PUMP
MT-608
PP-608
SLOPS TRANSFER PUMP
NOTES:
1. TANK MT-609 MAINTAINED AT 65° F BY INTERNAL STEAM COIL.
BASE CASE 25MM GAL/YEAR
2 1/15 FOR FINAL REPORT
1 PRELIMINARY FOR ESTIMATE
BADGER ENGINEERS, INC.
CAMBRIDGE, MASS.
PROCESS FLOW DIAGRAM
ACID HYDROLYSIS UNIT 600
OFFSITE TANKAGE
SOLAR ENERGY RESEARCH INSTITUTE
GOLDEN COLORADO
SCALE: NONE
CERTIFIED DATE
DWG. NO. E0461-106-13 2

GE-701 FIRST EFFECT EVAPORATOR

EI-701 FIRST EFFECT HEATER

GE-702 SECOND EFFECT EVAPORATOR

EI-702 SECOND EFFECT HEATER

GE-703 THIRD EFFECT EVAPORATOR

EI-703 THIRD EFFECT HEATER

EI-704 EVAPORATOR CONDENSER

PE-704 EVAPORATOR VACUUM SYSTEM

TP-706 SOLVENT COOLER

MS-701 HOTWELL DECANTER

EI-705 STILLAGE COOLER

GE-704 ROTARY FILTER

MT-702 MIXED SOLVENT TANK

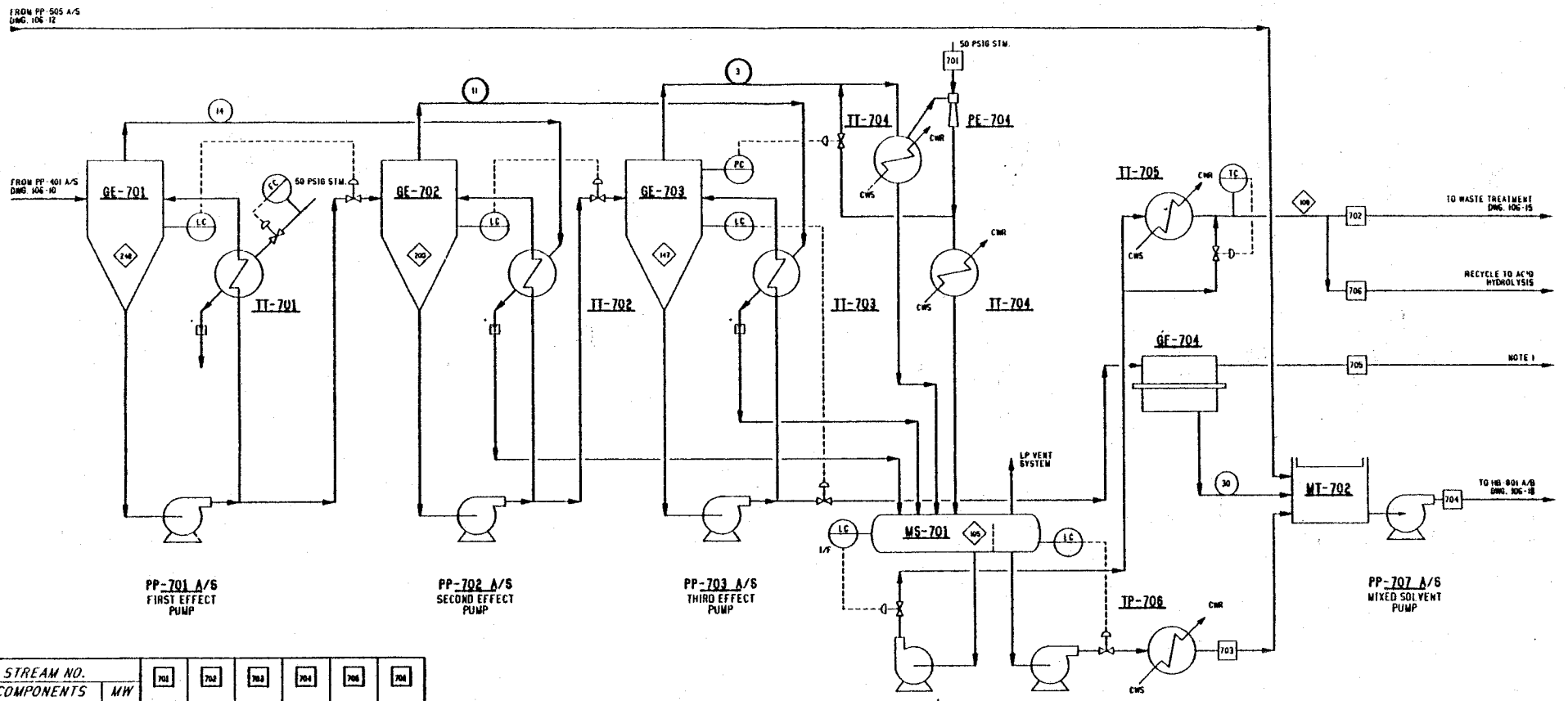

PP-701 A/S FIRST EFFECT PUMP

PP-702 A/S SECOND EFFECT PUMP

PP-703 A/S THIRD EFFECT PUMP

PP-705 A/S EVAPORATOR WASTE WATER PUMP

PP-706 A/S SOLVENT PUMP

PP-707 A/S MIXED SOLVENT PUMP

STREAM NO. / COMPONENTS	MW	701	702	703	704	706	708
WATER	18	1145	230536		24626		272865
FORMIC ACID	46						
HMF	126		1		13145		1
ACETIC ACID	60		23		1		22
ALPHA-PINENE	136		349	1156	2221		329
FURFURAL	96						1
LEVULINIC ACID	116		6		694		6
GLYCEROL	92				527		
OLEIC ACID	282				3350		
SULFURIC ACID	98						
GYPSUM	172					1998	
CALCIUM FORMATE	130				1075		
CALCIUM ACETATE	158				1194		
ANHYDROPYRANOSE	162				13760		
HEXOSE SUGARS	180				916		
CALCIUM LEVULINATE	270				1135		
YEAST	400				360		
TAR	400						
TOTAL - LB/HR.		1145	230977	1156	63003	1998	273223
TOTAL - LB MOL/HR		63.6					
GPM AT CONDITIONS			588	3	123		553

NOTE:

1. SEPARATED SOLIDS CAKE DIRECT TO TRUCK OR STORAGE AREA

LEGEND:

- TEMPERATURE °F
- PRESSURE, PSIG
- PRESSURE, PSIA
- STREAM NO.
- FLOWS IN LB/HR.

BASE CASE 25MM GAL/YEAR

2	11/5	FOR FINAL REPORT
1		PRELIMINARY FOR ESTIMATE

BADGER ENGINEERS, INC.
CAMBRIDGE, MASS.

PROCESS FLOW DIAGRAM
ENVIRONMENTAL - UNIT 700
WASTEWATER TREATMENT
SOLAR ENERGY RESEARCH INSTITUTE
GOLDEN COLORADO

SCALE: NONE

DWG. NO. E0461-106-14 2

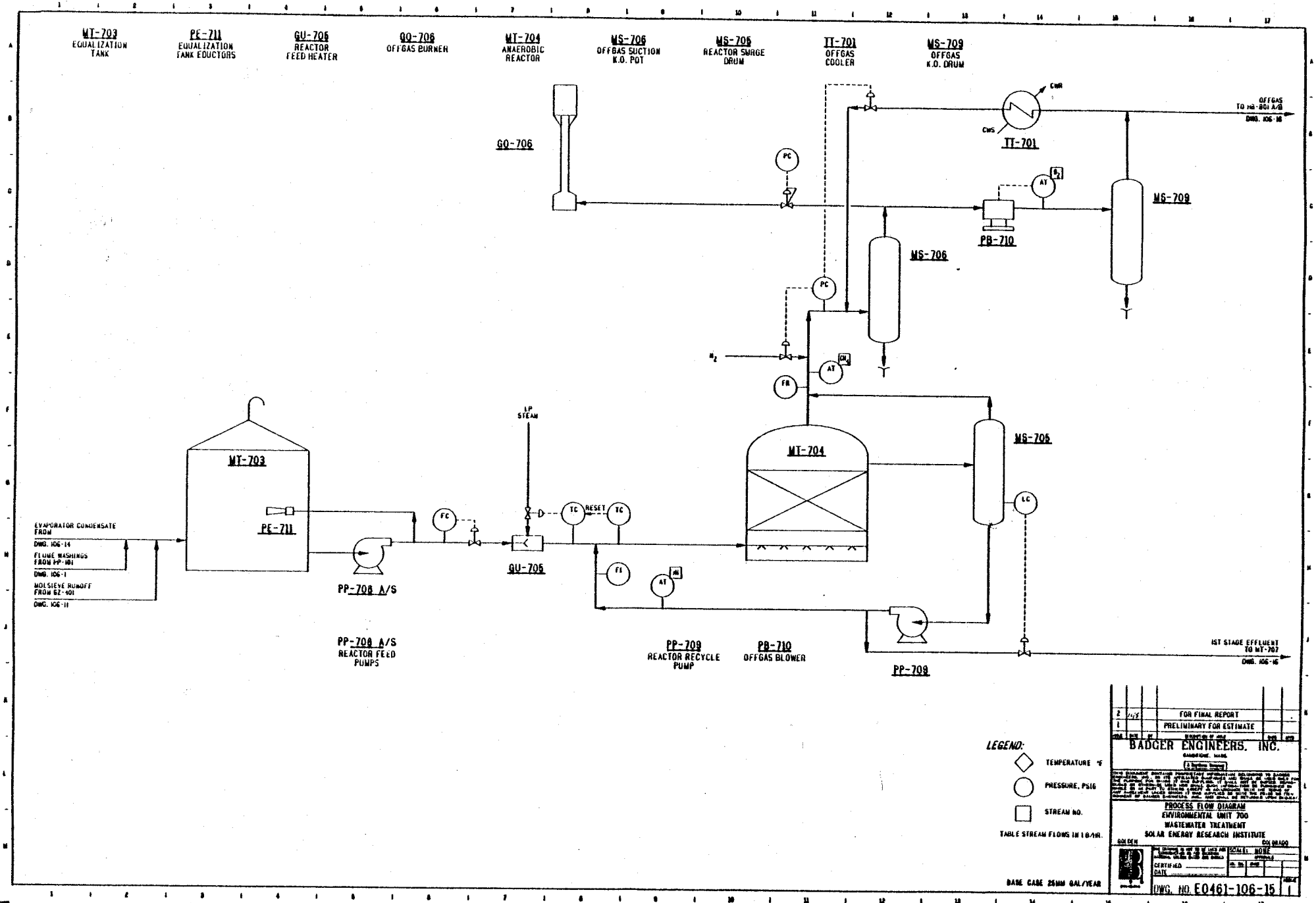
MT-703
EQUALIZATION TANK
PE-711
EQUALIZATION TANK EDUCTORS
GU-705
REACTOR FEED HEATER
GO-706
OFFGAS BURNER
MT-704
ANAEROBIC REACTOR
MS-706
OFFGAS SUCTION K.O. POT
MS-705
REACTOR SURGE DRUM
TT-701
OFFGAS COOLER
MS-709
OFFGAS K.O. DRUM
OFFGAS TO HB-801 A/B
DWG. 106-16
CWR
CWS
TT-701
GO-706
PC
AT
MS-709
PB-710
MS-706
PC
N_2
AT
FR
LP STEAM
MT-704
MS-705
MT-703
PE-711
FC
TC
RESET
TC
LC
EVAPORATOR CONDENSATE FROM
DWG. 106-14
FLUME WASHINGS FROM PP-101
DWG. 106-1
MOLSIEVE RUNOFF FROM GZ-401
DWG. 106-11
PP-708 A/S
GU-705
FI
AT
PP-708 A/S
REACTOR FEED PUMPS
PP-709
REACTOR RECYCLE PUMP
PB-710
OFFGAS BLOWER
PP-708
1ST STAGE EFFLUENT TO MT-707
DWG. 106-16
LEGEND:
TEMPERATURE °F
PRESSURE, PSIG
STREAM NO.
TABLE STREAM FLOWS IN LB/HR.
BASE CASE 25MM GAL/YEAR
2
FOR FINAL REPORT
1
PRELIMINARY FOR ESTIMATE
BADGER ENGINEERS, INC.
PROCESS FLOW DIAGRAM
ENVIRONMENTAL UNIT 700
WASTEWATER TREATMENT
SOLAR ENERGY RESEARCH INSTITUTE
GOLDEN
COLORADO
SCALE: NONE
CERTIFIED
DATE
DWG. NO. E0461-106-15
1

MT-707
BIOTREATER

GV-707
BIOTREATER AERATORS

MS-708
FILTER FEED TANK

GA-712
FILTER FEED TANK AGITATOR

GV-708
SECONDARY CLARIFIER

GV-710
BELT FILTER PRESS

GV-709
POLYMER FEED SYSTEM

GA-711
POLYMER MIXER

MF-709
FILTRATE SUMP

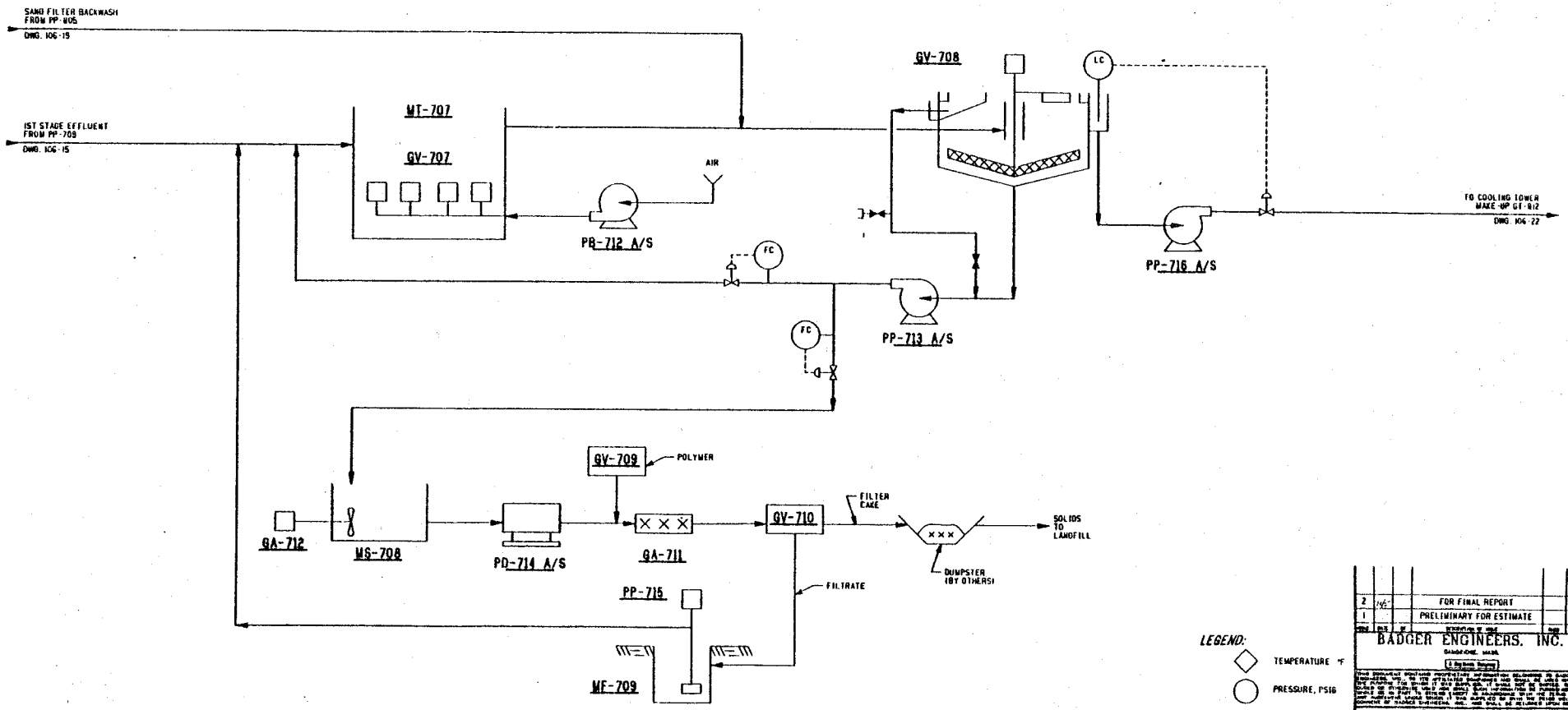

PB-712 A/S
AERATION BLOWERS

PP-713 A/S
SLUDGE PUMPS

PD-714 A/S
FILTER FEED PUMPS

PP-715
FILTRATE SUMP PUMP

PP-716 A/S
FINAL EFFLUENT PUMPS

LEGEND:

◇ TEMPERATURE °F

○ PRESSURE, PSIG

□ STREAM NO.

TABLE STREAM FLOWS IN LB/HR.

BASE CASE 25MM GAL/YEAR

2	1/96	FOR FINAL REPORT
1		PRELIMINARY FOR ESTIMATE

BADGER ENGINEERS, INC.
CAMBRIDGE, MASS.

PROCESS FLOW DIAGRAM
ENVIRONMENTAL - UNIT 700
WASTEWATER TREATMENT
SOLAR ENERGY RESEARCH INSTITUTE
GOLDEN COLORADO

SCALE: NONE
CERTIFIED
DATE

DWG. NO. E0461-106-16 2

MS-710
LP VENT KNOCKOUT DRUM

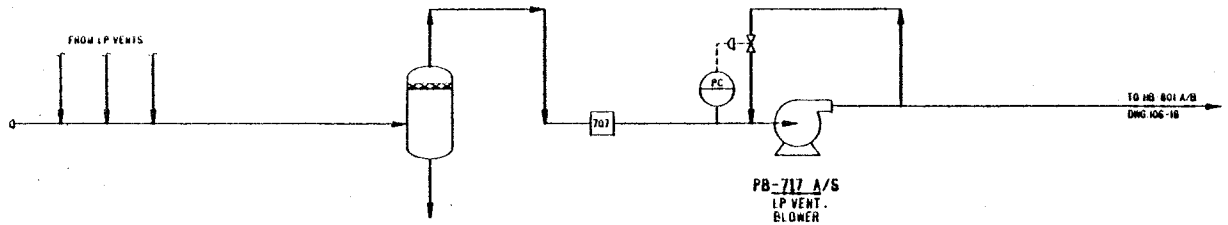

PB-717 A/S
LP VENT.
BLOWER

STREAM NO. / COMPONENTS	MW	707				
AIR	29	615				
CARBON DIOXIDE	44	790				
ACETALDEHYDE	44	2				
ACETONE	58	1				
ETHANOL	46	100				
ALPHA-PINENE	136	1				
WATER	18	18				
TOTAL - LB/HR.		1527				
TOTAL - LB MOL/HR		42.5				
GPM AT CONDITIONS						

LEGEND:
- ◇ TEMPERATURE °F
- ○ PRESSURE, PSIG
- □ STREAM NO.

TABLE STREAM FLOWS IN LB/HR.

BASE CASE 25MM GAL/YEAR

2	4/5	FOR FINAL REPORT
1		PRELIMINARY FOR ESTIMATE

BADGER ENGINEERS, INC.
CAMBRIDGE, MASS.

PROCESS FLOW DIAGRAM
ENVIRONMENTAL - (UNIT 700)
LP VENT SYSTEM
SOLAR ENERGY RESEARCH INSTITUTE
GOLDEN COLORADO

SCALE: NONE
CERTIFIED
DATE

DWG. NO. E0461-106-17 | 2

HB-801 A/B
BOILERS
(WITH FLAKT
SOLID FUEL SYSTEM)

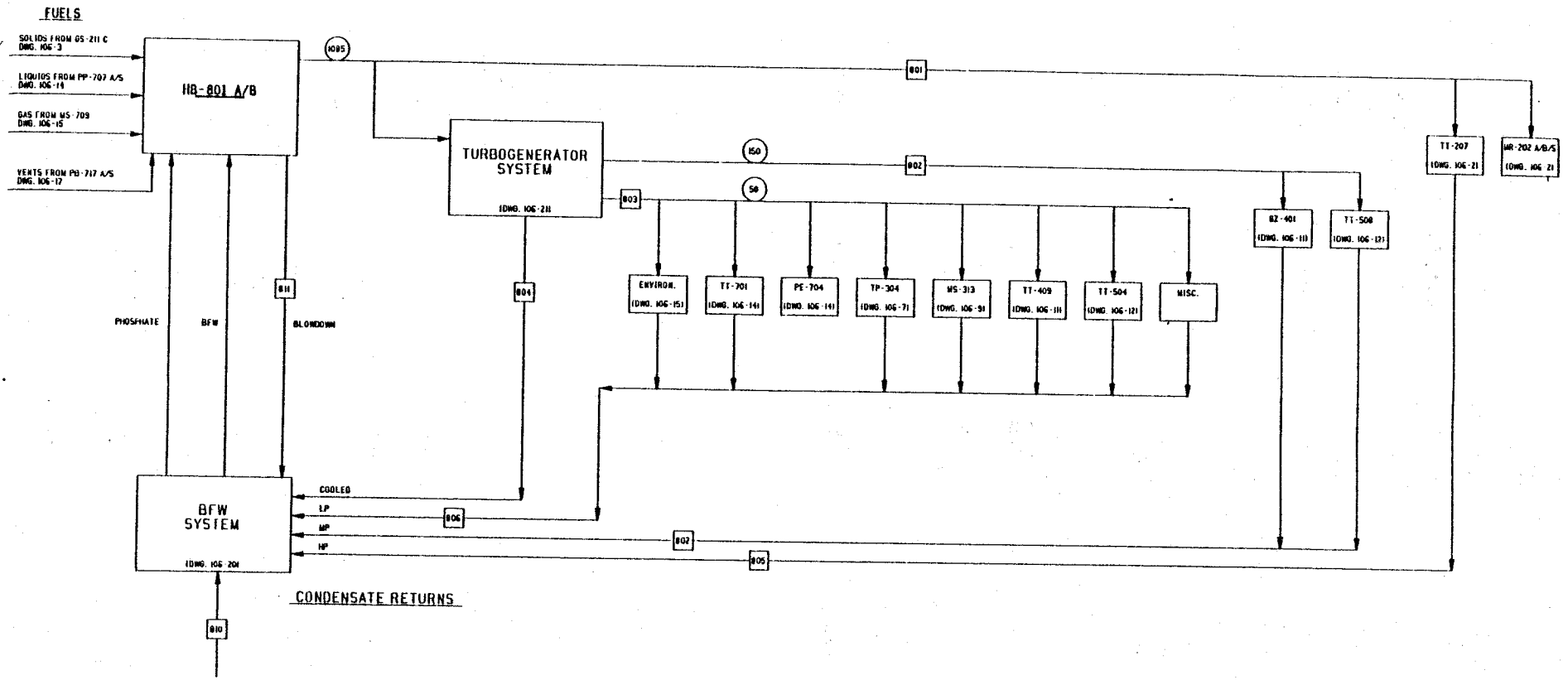

STREAM NO. / COMPONENTS	MW	801	802	803	804	808	806	810	811
WATER		152890	20500	344600	157010	38000	343455	180964	23400
TOTAL - LB/HR.		152890	20500	344600	157010	38000	343455	180964	23400
TOTAL - LB MOL/HR									
GPM AT CONDITIONS									

LEGEND:
- TEMPERATURE °F
- PRESSURE, PSIG
- STREAM NO.

TABLE STREAM FLOWS IN LB/HR.

BASE CASE 25MM GAL/YEAR

2		FOR FINAL REPORT
1		PRELIMINARY FOR ESTIMATE

BADGER ENGINEERS, INC.
CAMBRIDGE, MASS.

PROCESS FLOW DIAGRAM
UTILITIES - UNIT 800
BOILERS AND STEAM DISTRIBUTION
SOLAR ENERGY RESEARCH INSTITUTE
GOLDEN COLORADO

SCALE: NONE
CERTIFIED
DATE

DWG. NO. E0461-106-18

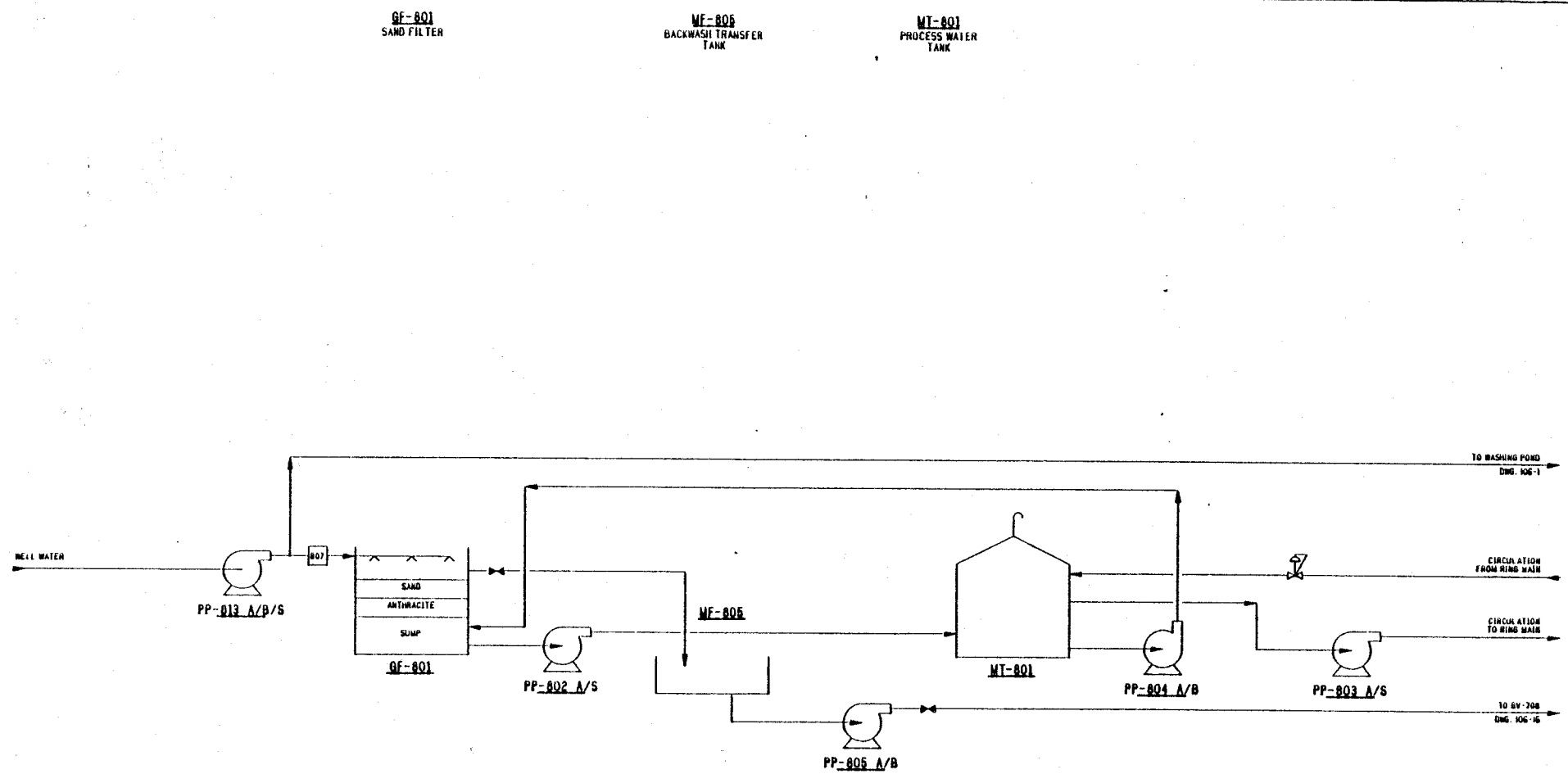

STREAM NO.		807				
COMPONENTS	MW					
WATER						
TOTAL - LB/HR						
TOTAL - LB MOL/HR						
GPM AT CONDITIONS		1700				

PP-813 A/B/S
WELL WATER PUMPS

PP-802 A/S
PROCESS WATER TRANSFER PUMP

PP-805 A/B
BACKWASH TRANSFER PUMPS

PP-804 A/B
BACKWASH FEED PUMPS

PF-803 A/S
PROCESS WATER CIRCULATING PUMP

LEGEND:

◇ TEMPERATURE °F

○ PRESSURE, PSIG

□ STREAM NO.

TABLE STREAM FLOWS IN LB/HR.

BASE CASE 25MM GAL/YEAR

2	14/1	FOR FINAL REPORT	
1		PRELIMINARY FOR ESTIMATE	

BADGER ENGINEERS, INC.
CAMBRIDGE, MASS.

PROCESS FLOW DIAGRAM
UTILITIES UNIT 800
PROCESS WATER SYSTEM
SOLAR ENERGY RESEARCH INSTITUTE
GOLDEN COLORADO

SCALE: NONE

CERTIFIED
DATE

DWG. NO. E0461-106-19 2

GU-805 CONDENSATE COLLECTION SYSTEM (PACKAGE UNIT)

GU-804A/S CONDENSATE POLISHER

GU-803A/B DEMINERALIZERS (PACKAGE UNIT)

MS-804 CONDENSATE SURGE DRUM

MS-803 HYDRAZINE DRUM

GU-807 HYDRAZINE ADDITION UNIT (PACKAGE UNIT)

GU-808 AMMONIA ADDITION UNIT (PACKAGE UNIT)

GU-809 PHOSPHATE ADDITION UNIT (PACKAGE UNIT)

GV-806 DEAERATOR

MS-802 BLOWDOWN FLASH DRUM

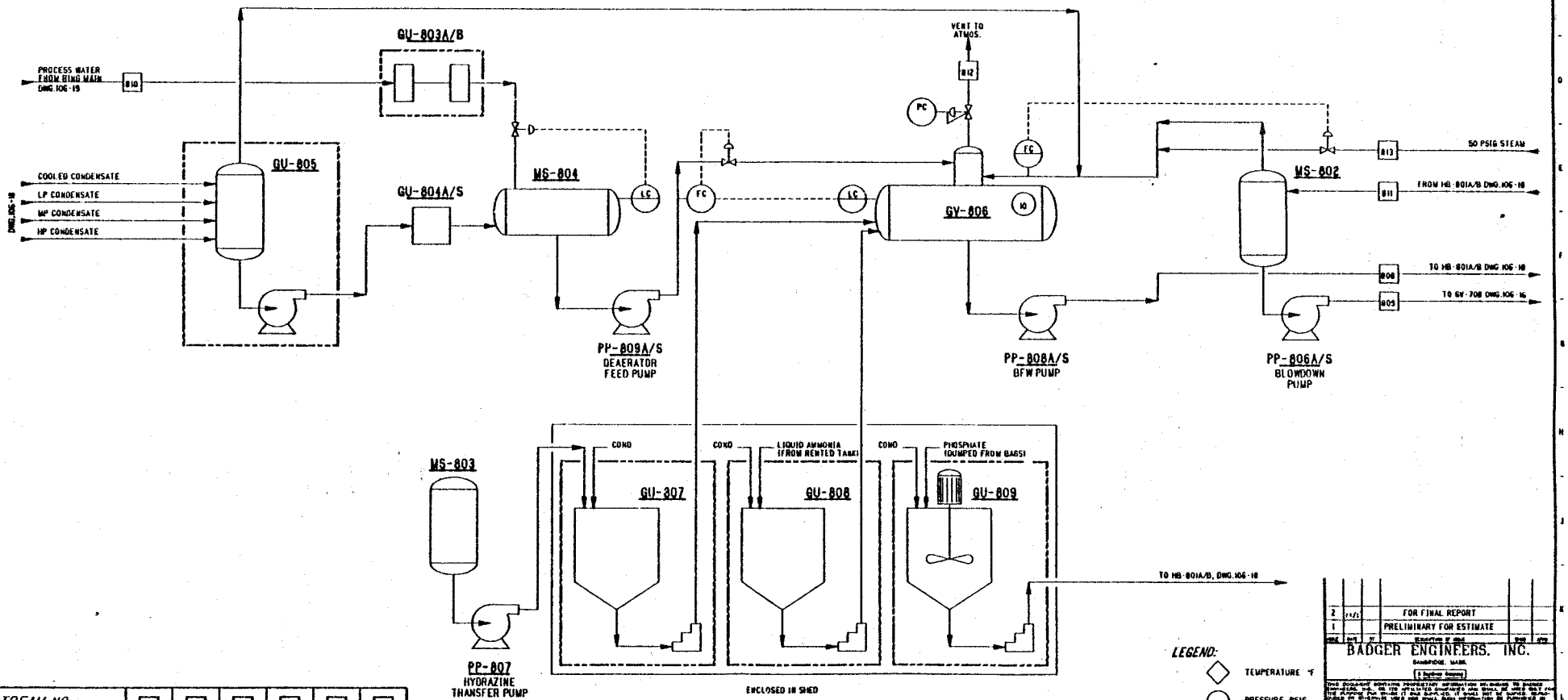

STREAM NO. / COMPONENTS	MW	809	808	810	811	812	813
WATER		776792	15000	180964	23400	10000	15700
TOTAL - LB/HR.		776792	15000	180964	23400	10000	15700
TOTAL - LB MOL/HR							
GPM AT CONDITIONS		1600	30	360	47		

LEGEND:
- TEMPERATURE °F
- PRESSURE, PSIG
- STREAM NO.

TABLE STREAM FLOWS IN LB/HR

BASE CASE 25MW GAL/YEAR

2		FOR FINAL REPORT
1		PRELIMINARY FOR ESTIMATE

BADGER ENGINEERS, INC.
CAMBRIDGE, MASS.

PROCESS FLOW DIAGRAM
UTILITIES - UNIT 800
BFW SYSTEM
SOLAR ENERGY RESEARCH INSTITUTE
GOLDEN COLORADO

SCALE: NONE
CERTIFIED
DATE

DWG. NO. E0461-106-20 2

GZ-811
TURBOGENERATOR
(PACKAGE UNIT INCLUDING
SURFACE CONDENSER
VACUUM EJECTOR SET
AND CONTROLS)

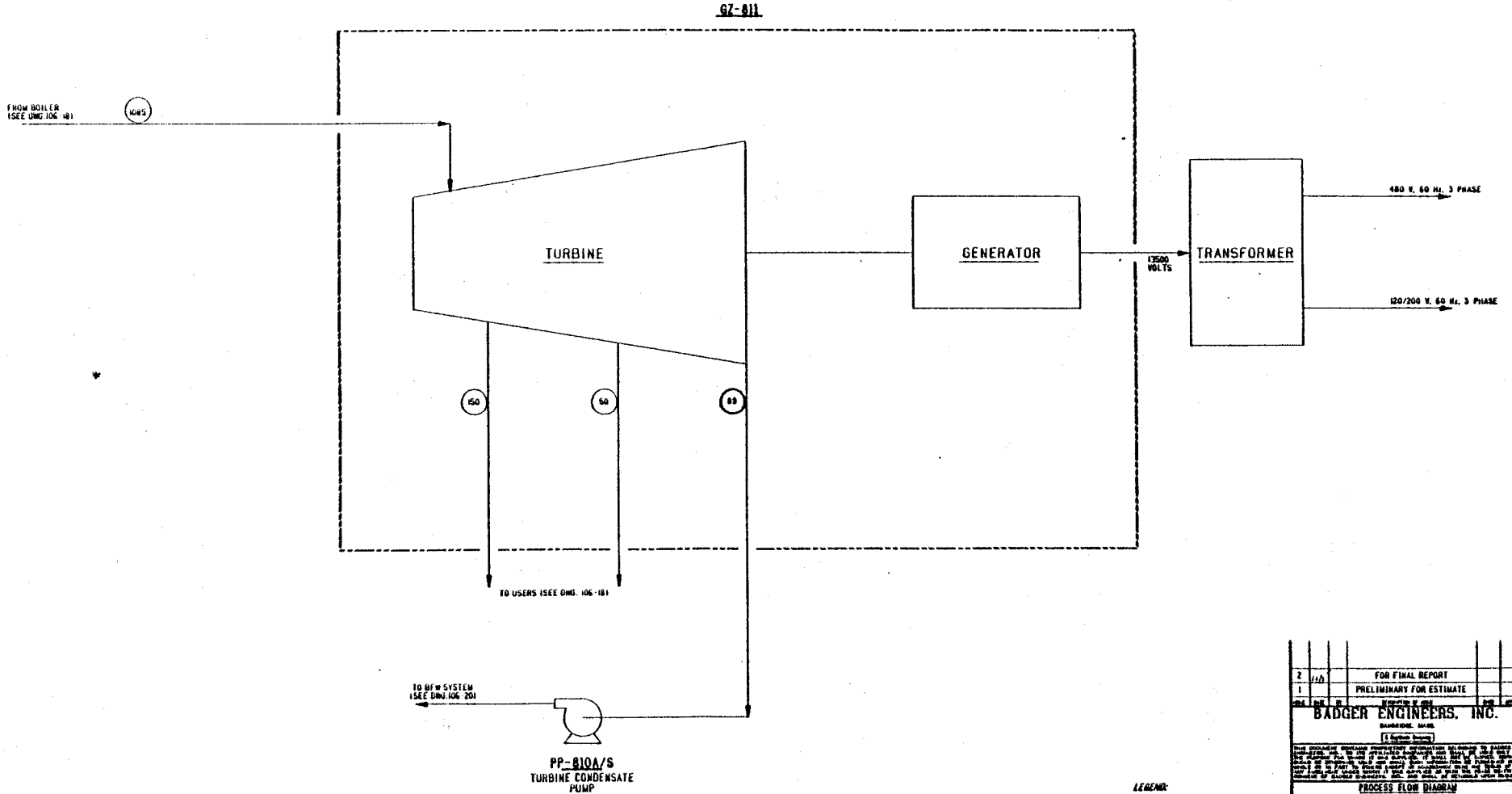

LEGEND:
PSIG
mm Hg

BASE CASE 25MW GAL/YEAR

2		FOR FINAL REPORT	
1		PRELIMINARY FOR ESTIMATE	

BADGER ENGINEERS, INC.
CAMBRIDGE, MASS.

PROCESS FLOW DIAGRAM
UTILITIES - UNIT 800
TURBOGENERATOR
SOLAR ENERGY RESEARCH INSTITUTE
GOLDEN COLORADO

SCALE: NONE
CERTIFIED
DATE

DWG. NO. E0461-106-21 | SHEET 1

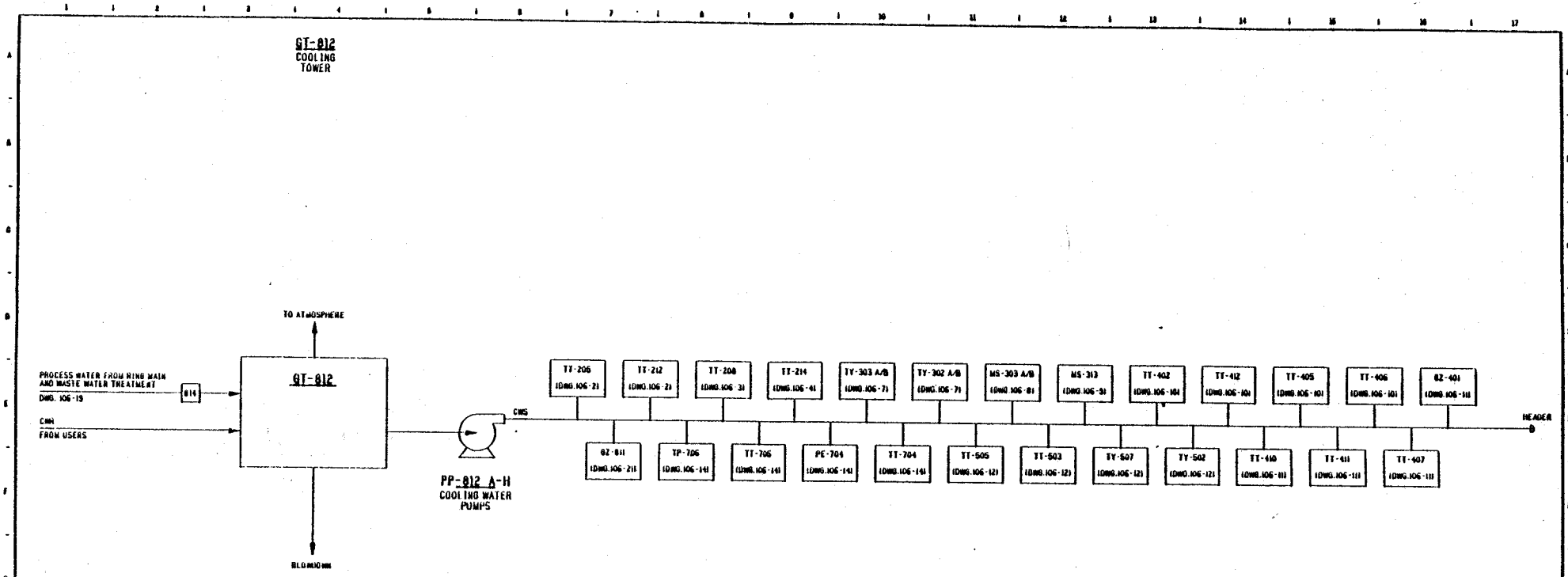

STREAM NO. / COMPONENTS	MW	814					
WATER		928000					
TOTAL - LB/HR		928000					
TOTAL - LB MOL/HR							
GPM AT CONDITIONS		1950					

LEGEND:
- TEMPERATURE °F
- PRESSURE, PSIG
- STREAM NO.

TABLE STREAM FLOWS IN LB/HR.

BASE CASE 25MM GAL/YEAR

2		FOR FINAL REPORT
1		PRELIMINARY FOR ESTIMATE

BADGER ENGINEERS, INC.

PROCESS FLOW DIAGRAM
UTILITIES - UNIT 800
COOLING WATER SYSTEM
SOLAR ENERGY RESEARCH INSTITUTE
GOLDEN, COLORADO

SCALE: NONE
CERTIFIED
DATE

DWG. NO. E0461-106-22 | 2

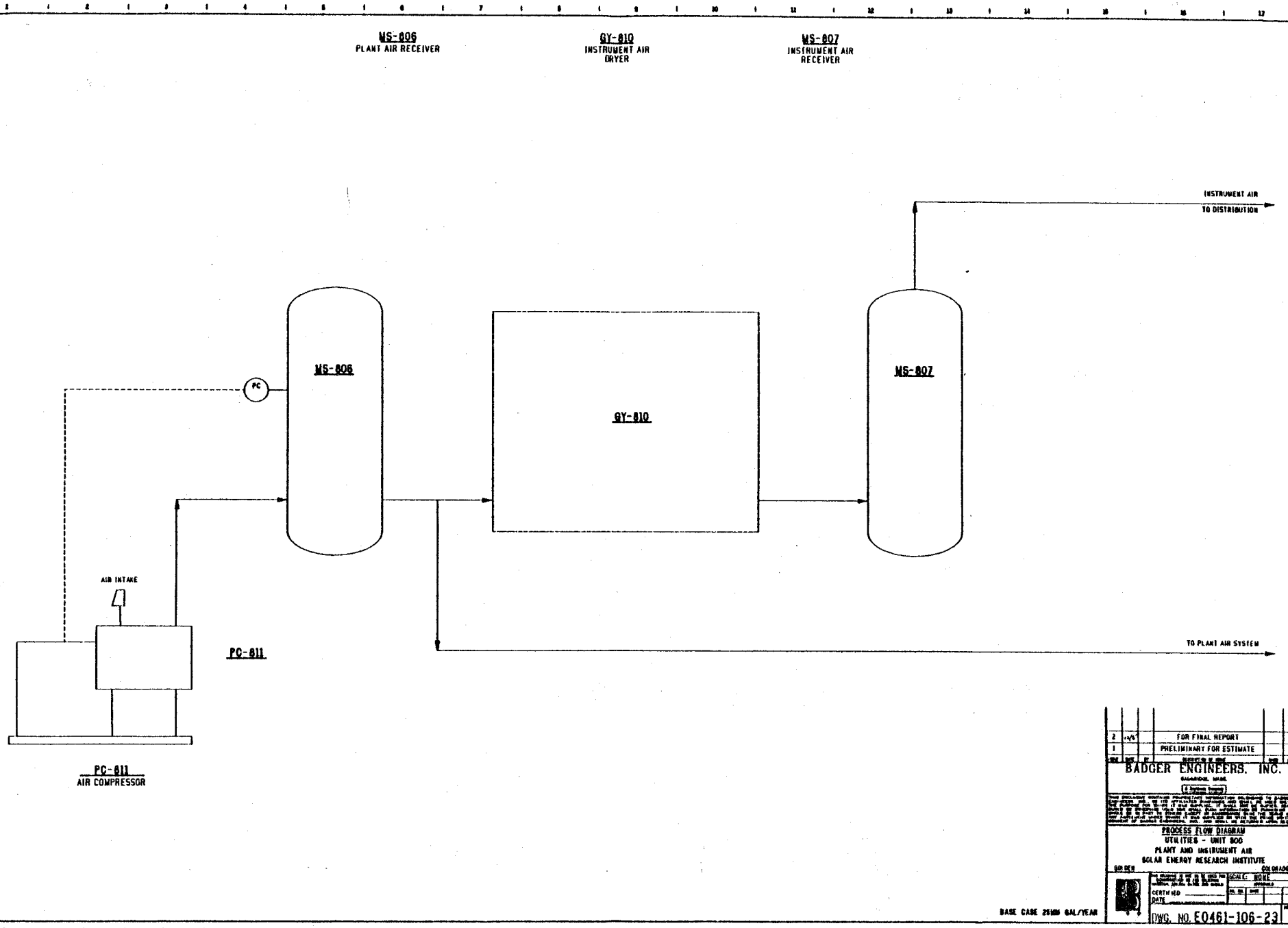

2		FOR FINAL REPORT
1		PRELIMINARY FOR ESTIMATE

BADGER ENGINEERS, INC.
CAMBRIDGE, MASS.

PROCESS FLOW DIAGRAM
UTILITIES - UNIT 800
PLANT AND INSTRUMENT AIR
SOLAR ENERGY RESEARCH INSTITUTE
GOLDEN COLORADO

SCALE: NONE
CERTIFIED
DATE

DWG. NO. E0461-106-23 1

PROCESS FLOW DIAGRAMS

HYDROLYSIS REACTION SECTION
(Alternative Case I)

GA-207 STATIC MIXER | TT-207 ACID WATER HEATER | MB-216 CHIP FEED BIN | GG-202 A/B/C GRINDER | GS-201 A/B/C CHIP SCREW | GS-203 A/B/C WOOD GRINDS CONVEYOR | GY-229 OVERSIZE WOOD GRIND SCREEN | MB-217 GROUND WOOD BIN | GS-231 A/B WOOD GRINDS BELT FEEDER | GA-204 A/B HIGH PRESS FEEDER | MS-201 A/B SLURRY VESSEL | GA-205 A/B WOOD SLURRY AGITATOR | MR-202 A/B/S HYDROLYSIS REACTOR | MS-203 HIGH PRESS. FLASH DRUM | MS-204 LOW PRESS. FLASH DRUM | TT-209 SLURRY COOLER

TT-216 SLURRY VESSEL VENT CONDENSER | TT-202 H.P. FLASH VAPOR AFTERCOOLER | TT-201 PRIMARY FEED WATER PREHEATER | TT-211 SECONDARY FEEDWATER PREHEATER | TT-205 AQUEOUS FURFURAL COOLER | TT-212 LP FLASH VAPOR AFTERCOOLER

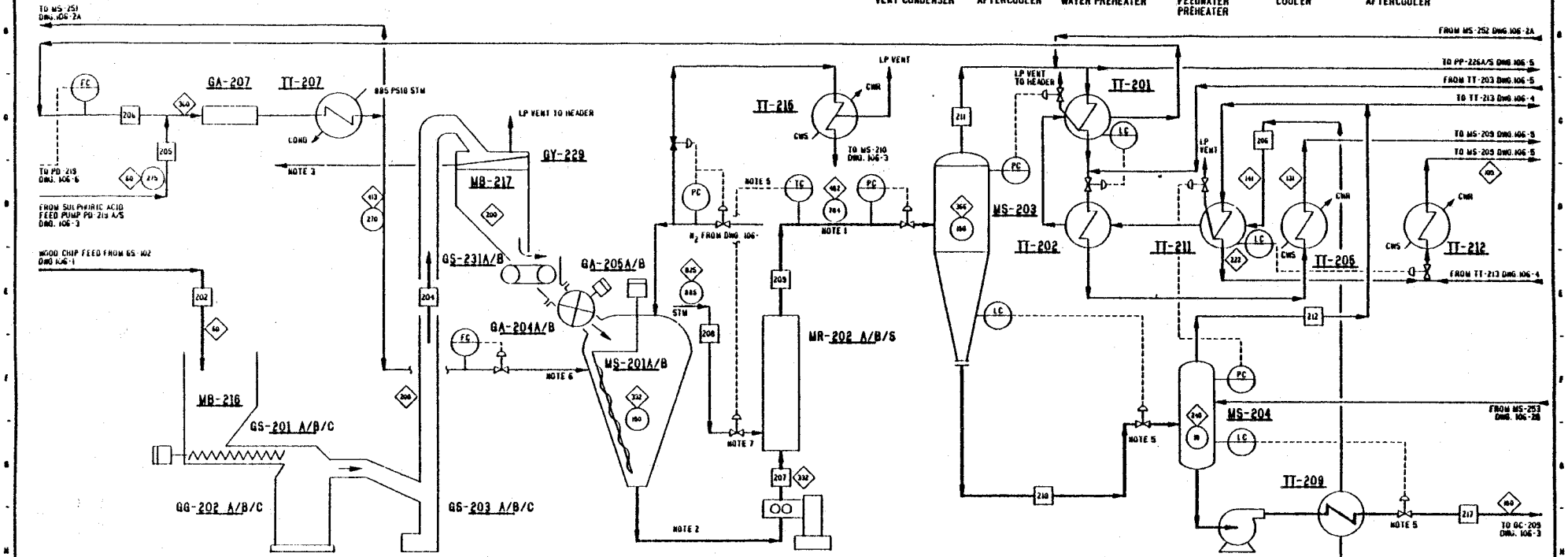

STREAM NO. / COMPONENTS	MW	202	204	206	208	207	238	209	210	211	212	217
WOOD (DRY)	800	134505	134505			134505						
FURFURAL	96							11642	4851	8203	2523	2328
ACETIC ACID	60							772	573	198	123	441
ALPHA-PINENE	136							2767	2205	551	353	1852
WATER	18	134505	134505		455024	532640	39057	635481	517293	119070	100441	442764
FORMIC ACID	46							662	578	84	65	512
LEVULINIC ACID	116							1676	1674	3		1674
HMF	126							2470	2470			2470
OLEIC ACID	282							2767	2756			2756
SULFURIC ACID	98			6262				5380	5380			5380
LIGNIN	5000							33235	33296			33296
ASH	100							463	463			463
HEXOSE SUGARS	180							34297	34237			34287
ANHYDROPYRANOSE	162							4498	4498			4498
TAR (SOLUBLE)	400							2337	2337			2337
HEXAN POLYMER	162							18522	18522			18522
PENTOSE SUGARS	150							14553	12348			12348
TOTAL - LB/HR		269010	269010	6262	455024	672525	39057	771582	643540	128109	103506	565920
TOTAL - LB MOL/HR										6400	4000	
GPM AT CONDITIONS				6	950	1360		1610	1320			1150

PD-201 A/B/S HYDROLYSIS FEED PUMP

PP-204 A/S LIGNIN SLURRY PUMP

NOTES:

1. TEFLON LINED C.S. FOR REACTOR EXIT PIPING.
2. ENTRANCE PIPING TO PD-201 12" DIAM. MINIMUM LENGTH
3. OVERSIZE RETURNED TO CHIP PILE VIA FRONT LOADER.
4. HIGH TEMP STEAM SHUT OFF AT 526° F.
5. 12" DURIRON CONTROL VALVE.
6. MINIMUM LENGTH
7. TANGENTIAL STEAM INLET

LEGEND:

- TEMPERATURE °F
- PRESSURE, PSIG
- STREAM NO.

TABLE STREAM FLOWS IN LB/HR.

BASE CASE 25MM GAL/YEAR

NO.	BY	DESCRIPTION	DATE	APP'D
2	M/F	FOR FINAL REPORT		
1		PRELIMINARY FOR ESTIMATE		

BADGER ENGINEERS, INC.
CAMBRIDGE, MASS.

PROCESS FLOW DIAGRAM
ACID HYDROLYSIS UNIT 200 (SHEET 1 OF 3)
HYDROLYSIS REACTION
SOLAR ENERGY RESEARCH INSTITUTE
GOLDEN ALTERNATE CASE COLORADO

SCALE: NONE
CERTIFIED
DATE

DWG. NO. E0461-106-2A 2

GC-209A/B	GA-212	MS-210	MS-211	GC-210A/B	GA-233	MS-225	MS-226	GC-232A/B	GA-234	MS-227	GC-214A/B	GA-213	GS-211A/B/C	MR-206	MS-212	GA-222
1 ST STAGE LIGNIN CENTRIFUGE	2 ND STAGE LIGNIN FEED TANK AGITATOR	1 ST STAGE WASH TANK	2 ND STAGE LIGNIN FEED TANK	2 ND STAGE LIGNIN CENTRIFUGE	3 RD STAGE LIGNIN FEED TANK AGITATOR	2 ND STAGE WASH TANK	3 RD STAGE LIGNIN FEED TANK	3 RD STAGE LIGNIN CENTRIFUGE	DEWATERING CENTRIFUGE FEED TANK AGITATOR	DEWATERING CENTRIFUGE FEED TANK	LIGNIN DEWATERING CENTRIFUGE	NEUTRALIZATION TANK AGITATOR	LIGNIN SLUDGE SCREWS	NEUTRALIZATION REACTION TANK	LIGNIN SLUDGE TANK	LIGNIN SLUDGE TANK AGITATOR

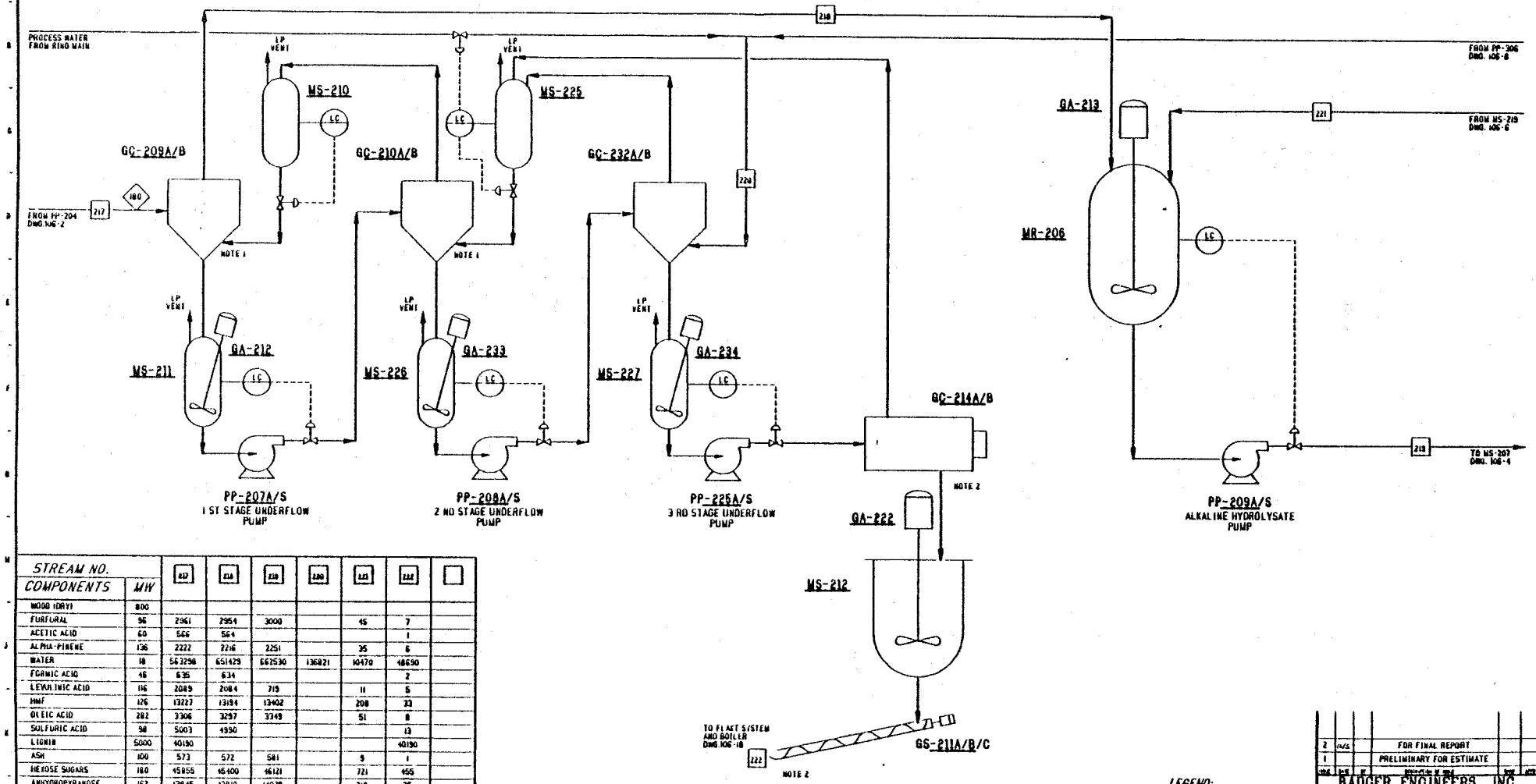

STREAM NO. / COMPONENTS	MW	217	218	219	220	221	222	
WOOD (DRY)	800							
FURFURAL	96	2961	2954	3000		45	7	
ACETIC ACID	60	565	564				1	
ALPHA-PINENE	136	2222	2216	2251		35	6	
WATER	18	563298	651429	662530	136821	10470	18690	
FORMIC ACID	46	635	634				2	
LEVULINIC ACID	116	2089	2084	715		11	5	
HMF	126	13227	13194	13402		208	33	
OLEIC ACID	282	3306	3297	3349		51	8	
SULFURIC ACID	98	5003	4990				13	
LIGNIN	5000	40190					40190	
ASH	100	573	572	581		9	1	
HEXOSE SUGARS	180	45855	45400	46121		721	455	
ANHYDROPYRANOSE	162	13845	13810	14028		218	35	
TAR (SOLUBLE)	400	2266	2266					
TAR (INSOLUBLE)	400	9066		2266			9066	
CALCIUM HYDROXIDE	74					6067		
CALCIUM FORMATE	130			910		14		
CALCIUM ACETATE	158			758		12		
GYPSUM	172			8760				
CALCIUM LEVULINATE	270			1626		25		
TOTAL - LB/HR.		705102	743411	760298	136821	15887	98512	
TOTAL - LB MOL/HR								
GPM AT CONDITIONS		1450	1530	1565	275	35	180	

LEGEND:
- TEMPERATURE °F
- PRESSURE, PSIG
- STREAM NO.

TABLE STREAM FLOWS IN LB/HR.

BASE CASE 25MM GAL/YEAR

NOTES:
1. DISPLACEMENT WASH LIQUOR TO CENTRIFUGE BY GRAVITY FEED.
2. 50 % LIGNIN/TAR SLUDGE

NO.	BY	DESCRIPTION	DATE
2	MAS	FOR FINAL REPORT	
1		PRELIMINARY FOR ESTIMATE	

BADGER ENGINEERS, INC.
CAMBRIDGE, MASS.

PROCESS FLOW DIAGRAM
ACID HYDROLYSIS UNIT 200 (SHEET 2 OF 3)
LIGNIN SEPARATION AND WASHING
SOLAR ENERGY RESEARCH INSTITUTE
GOLDEN ALTERNATE CASE GOLDEN

SCALE: NONE
CERTIFIED
DATE

DWG. NO. E0461-106-3 2

MS-251	MR-250	GA-250	IT-251	MS-252	MS-253	GC-253	MS-255	GC-251 A/B	GC-252	GA-256	GS-264 A/B/C	MS-257	MS-256	GA-255	GA-258	MS-258
2ND STAGE SLURRY VESSEL	2ND STAGE HYDROLYSIS REACTOR	2ND STAGE SLURRY VESSEL AGITATOR	2ND STAGE SLURRY COOLER	2ND STAGE H.P. FLASH DRUM	2ND STAGE L.P. FLASH DRUM	2ND STAGE LIGNIN DEWATERING CENTRIFUGE	2ND STAGE LIGNIN WASH TANK	2ND STAGE PRIMARY LIGNIN CENTRIFUGE	2ND STAGE LIGNIN WASHING CENTRIFUGE	LIGNIN SLUDGE TANK AGITATOR	LIGNIN SLUDGE SCREW	LIGNIN SLUDGE TANK	2ND STAGE LIGNIN CENTRIFUGE FEED TANK	2ND STAGE CENTRIFUGE FEED TANK AGITATOR	DEWATERING CENTRIFUGE FEED AGITATOR	DEWATERING CENTRIFUGE FEED TANK

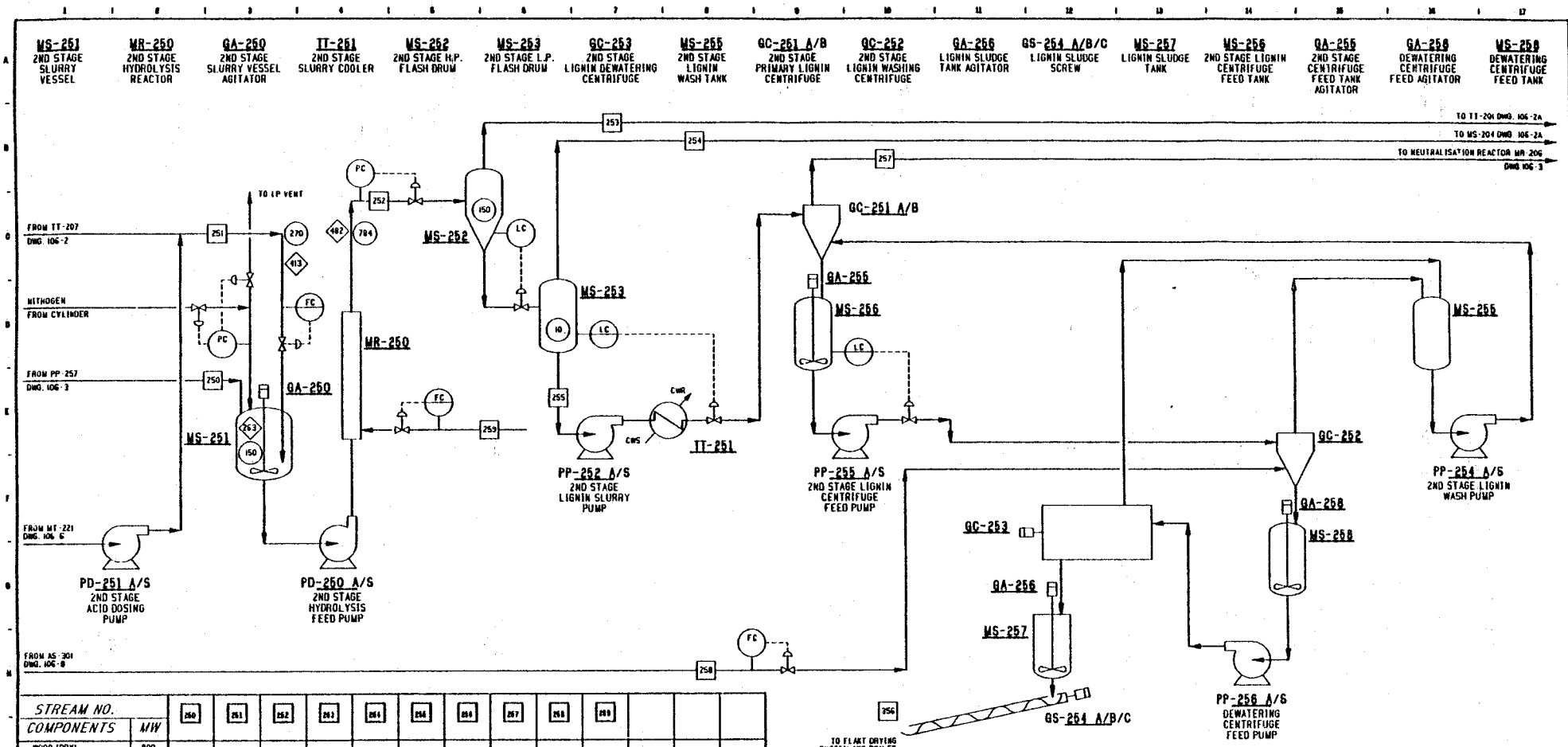

STREAM NO. / COMPONENTS	MW	250	251	252	253	254	256	258	257	258	259
WOOD (DRY)	800										
FURFURAL	96	20									
ACETIC ACID	60	1									
ALPHA-PINENE	136	18									
WATER	18	95076	56889	705963	38819	26316	140834	34957	180877	7500	53100
FORMIC ACID	46	4		221	29	22	170	2	168		
LEVULINIC ACID	116	18		551			551	6	545		
HMF	126	22		2989			2989	30	2969		
OLEIC ACID	282	30									
SULFURIC ACID	98	45	892	892			892	9	873		
LIGNIN	5000	33296		33296			33296	33296			
ASH	100	9									
HEXOSE SUGARS	180	331		11319			11319	113	11206		
ANHYDROPYRANOSE	162	44		3131			3131	31	3100		
TAR (SOLUBLE)	400	120									
TAR (INSOLUBLE)	400	1764		1852			1852	1852			
CELLULOSE		18552									
XYLOSE											
TOTAL - LB/HR.		149348	57771	260220	38396	25886	195034	70296	189738	7500	53100
TOTAL - LB MOL/HR					2133	1438					3000
GPM AT CONDITIONS		380	135	650			412	130	420	150	

LEGEND:
- TEMPERATURE °F
- PRESSURE, PSIG
- STREAM NO.

TABLE STREAM FLOWS IN LB/HR.

BASE CASE 25MM GAL/YEAR

2	12/5	FOR FINAL REPORT
1		PRELIMINARY FOR ESTIMATE

BADGER ENGINEERS, INC.
CAMBRIDGE, MASS.

PROCESS FLOW DIAGRAM
UNIT 200
2ND STAGE ACID HYDROLYSIS
SOLAR ENERGY RESEARCH INSTITUTE
ALTERNATE CASE
GOLDEN COLORADO

SCALE: NONE
CERTIFIED
DATE

DWG. NO. E0461-106-2B 2

GC-209A/B
1 ST STAGE LIGNIN CENTRIFUGE

GA-212
2 ND STAGE LIGNIN FEED TANK AGITATOR

MS-210
1 ST STAGE WASH TANK

MS-211
2 ND STAGE LIGNIN FEED TANK

GC-210A/B
2 ND STAGE LIGNIN CENTRIFUGE

GA-233
3 RD STAGE LIGNIN FEED TANK AGITATOR

MS-225
2 ND STAGE WASH TANK

MS-226
3 RD STAGE LIGNIN FEED TANK

GC-232A/B
3 RD STAGE LIGNIN CENTRIFUGE

GA-234
DEWATERING CENTRIFUGE FEED TANK AGITATOR

MS-227
DEWATERING CENTRIFUGE FEED TANK

GC-214A/B
LIGNIN DEWATERING CENTRIFUGE

GA-213
NEUTRALIZATION TANK AGITATOR

MR-206
NEUTRALIZATION REACTION TANK

MS-259
SLUDGE DILUTION VESSEL

GA-257
DILUTION VESSEL AGITATOR

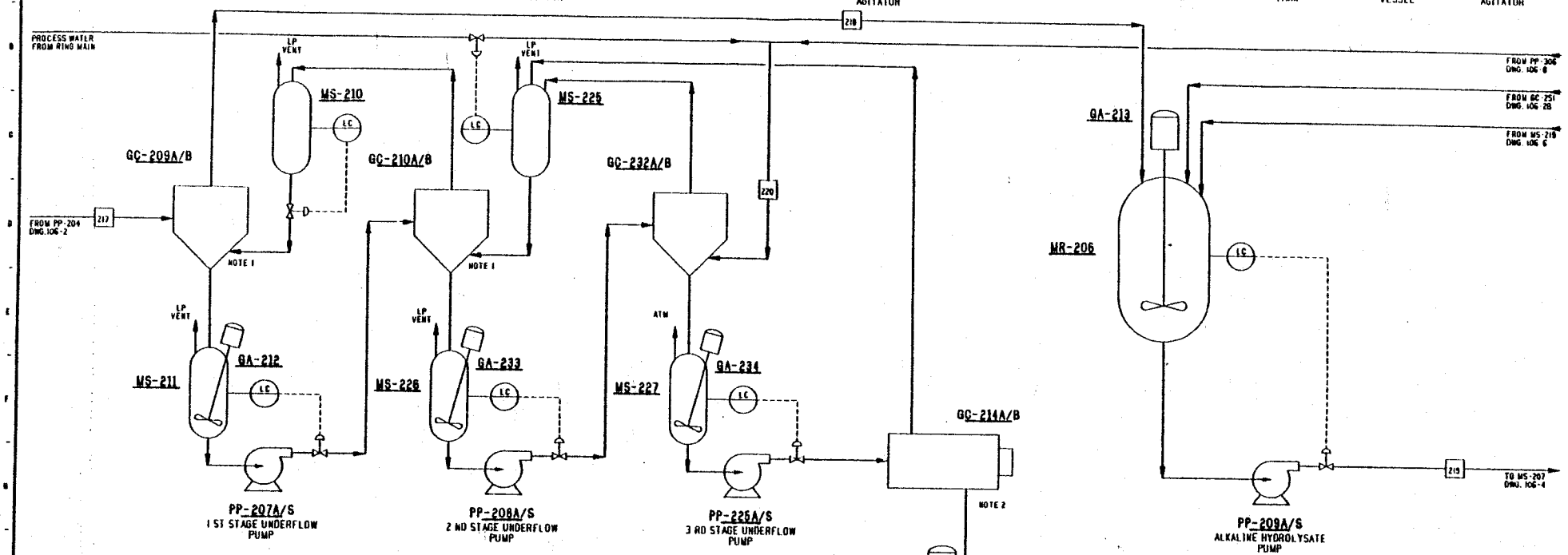

STREAM NO. / COMPONENTS	MW	217	218	219	220		222	224
WOOD (DRY)	800							
FURFURAL	96	2328	2306	2306				22
ACETIC ACID	60	441	441					4
ALPHA-PINENE	136	1852	1830	1830				18
WATER	18	442764	511560	707589	121716		42156	52920
FORMIC ACID	46	512	507					4
LEVULINIC ACID	116	1674	1654					18
HMF	126	2470	2448	5417				22
OLEIC ACID	282	2756	2734	2734				28
SULFURIC ACID	98	5380	5336					44
LIGNIN	5000	33296						33296
ASH	100	463	463	463				4
HEXOSE SUGARS	180	34297	33957	45163				331
ANHYDROPYRANOSE	162	4498	4454	7564				44
TAR (SOLUBLE)	400	2337	573					
TAR (INSOLUBLE)	400			573				1764
HEXAN POLYMERR		18522						18522
PENTOSE SUGARS		12348	12128	12128				123
CALCIUM HYDROXIDE	74							
CALCIUM LEVULINATE	270			2558				
CALCIUM FORMATE	130			953				
CALCIUM SULPHATE	172			10897				
CALCIUM ACETATE	158			581				
TOTAL - LB/HR.		565920	580391	800746	121716		42156	107164
TOTAL - LB MOL/HR								
GPM AT CONDITIONS		1200	1200	1620	250		85	25

NOTES:

1. DISPLACEMENT WASH LIQUOR TO CENTRIFUGE BY GRAVITY FEED.
2. 50 % LIGNIN/TAR/CELLULOSE SLUDGE

LEGEND:

- TEMPERATURE °F
- PRESSURE, PSIG
- STREAM NO.

TABLE STREAM FLOWS IN LB/HR.

BASE CASE 25MM GAL/YEAR

2	12/A	FOR FINAL REPORT
1		PRELIMINARY FOR ESTIMATE

BADGER ENGINEERS, INC.
CAMBRIDGE, MASS.

PROCESS FLOW DIAGRAM
ACID HYDROLYSIS UNIT 200 (SHEET 2 OF 8)
LIGNIN SEPARATION AND WASHING
SOLAR ENERGY RESEARCH INSTITUTE
GOLDEN ALTERNATE CASE COLORADO

SCALE: NONE
CERTIFIED
DATE

DWG. NO. E0461-106-3A 2

PLOT PLANS

(Design Case I)

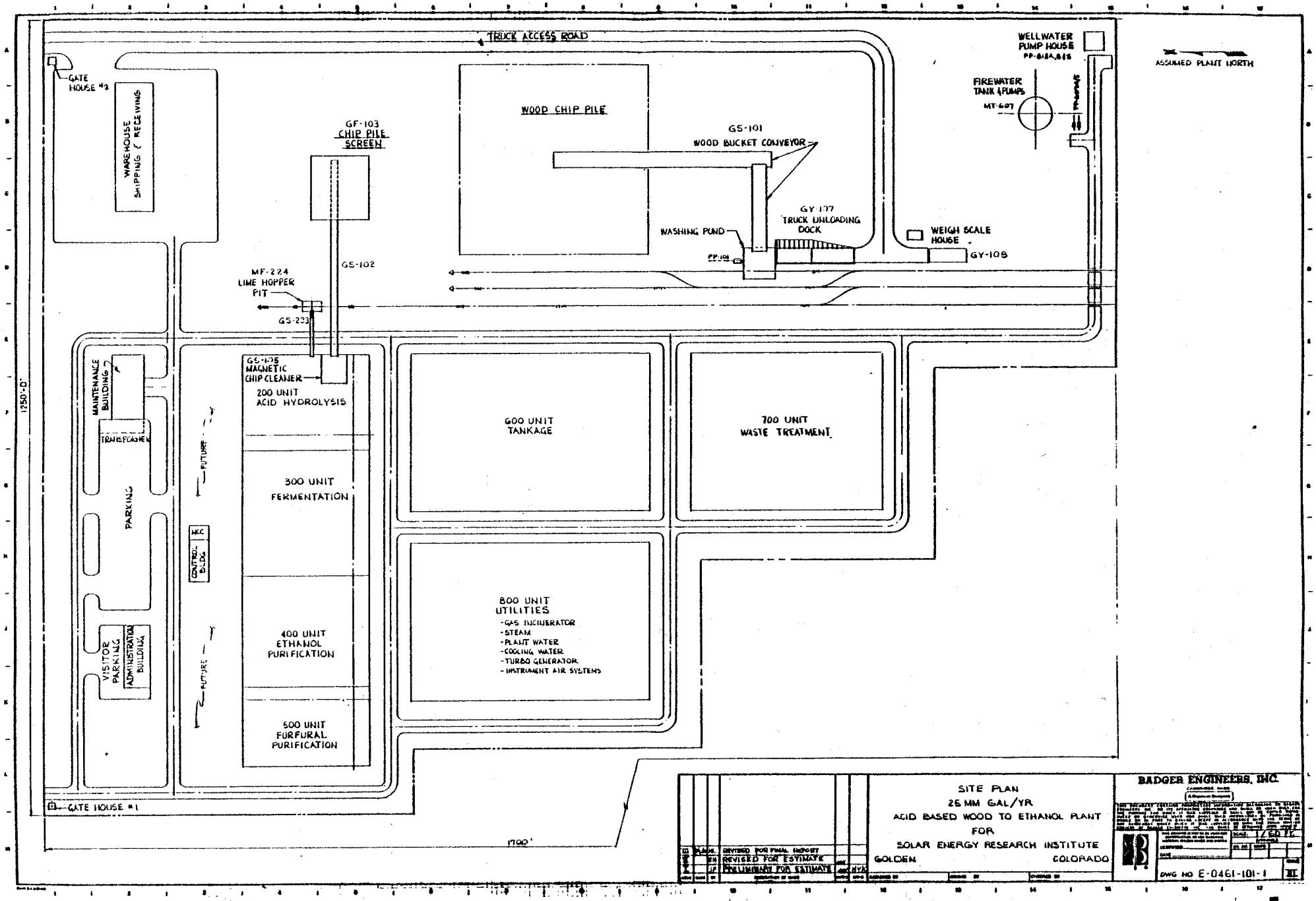
TRUCK ACCESS ROAD
GATE HOUSE #2
WAREHOUSE SHIPPING & RECEIVING
GF-103 CHIP PILE SCREEN
WOOD CHIP PILE
GS-101 WOOD BUCKET CONVEYOR
GY-107 TRUCK UNLOADING DOCK
WASHING POND
PP-101
WEIGH SCALE HOUSE
GY-108
WELLWATER PUMP HOUSE
FIREWATER TANK & PUMPS
MT-607
ASSUMED PLANT NORTH
GS-102
MF-224 LIME HOPPER PIT
GS-223
GS-105 MAGNETIC CHIP CLEANER
200 UNIT ACID HYDROLYSIS
300 UNIT FERMENTATION
400 UNIT ETHANOL PURIFICATION
500 UNIT FURFURAL PURIFICATION
600 UNIT TANKAGE
700 UNIT WASTE TREATMENT
800 UNIT UTILITIES
-GAS INCINERATOR
-STEAM
-PLANT WATER
-COOLING WATER
-TURBO GENERATOR
-INSTRUMENT AIR SYSTEMS
MAINTENANCE BUILDING
TRANSFORMER
PARKING
VISITOR PARKING
ADMINISTRATION BUILDING
FUTURE
FUTURE
MCC
CONTROL BLDG
GATE HOUSE #1
1250'-0"
1700'
SITE PLAN
25 MM GAL/YR
ACID BASED WOOD TO ETHANOL PLANT
FOR
SOLAR ENERGY RESEARCH INSTITUTE
GOLDEN COLORADO
REVISED FOR FINAL REPORT
REVISED FOR ESTIMATE
PRELIMINARY FOR ESTIMATE
BADGER ENGINEERS, INC.
DWG NO E-0461-101-1

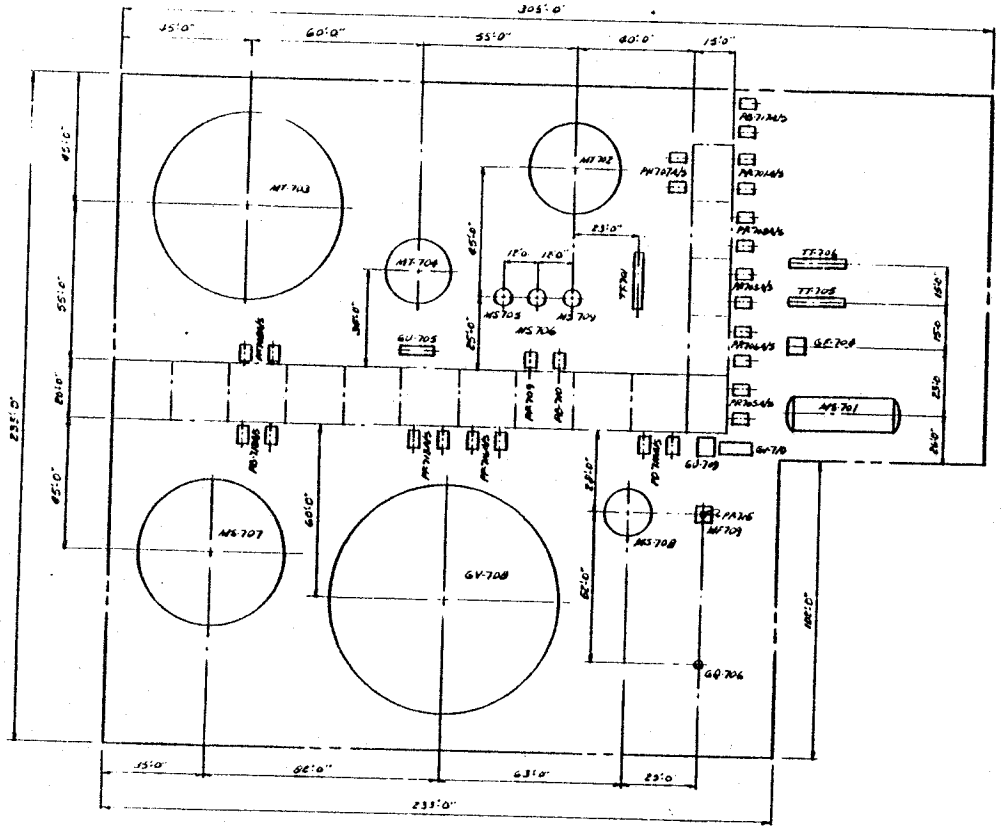

PLAN @ GRADE
700 UNIT - WASTE TREATMENT
SCALE: 1" = 20'-0"

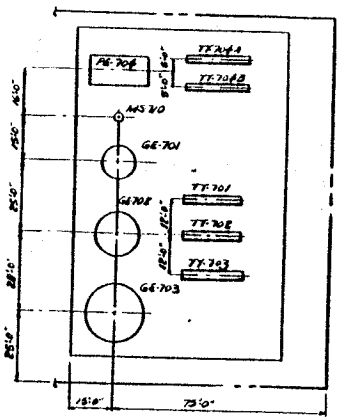

PLAN @ 1ST LEVEL EL 40'-0" ±
700 UNIT - WASTE TREATMENT
SCALE: 1" = 20'-0"

II			REVISED FOR FINAL REPORT
I		RH	PRELIMINARY FOR ESTIMATE

EQUIPMENT LOCATION PLAN
25 MM GAL/YR.
ACID BASED WOOD TO ETHANOL PLANT
FOR
SOLAR ENERGY RESEARCH INSTITUTE
GOLDEN COLORADO

BADGER ENGINEERS, INC.

DRAWN BY R. HISTEN

SCALE 1" = 20'-0"

DWG NO E04G1-102-1

ISSUE II

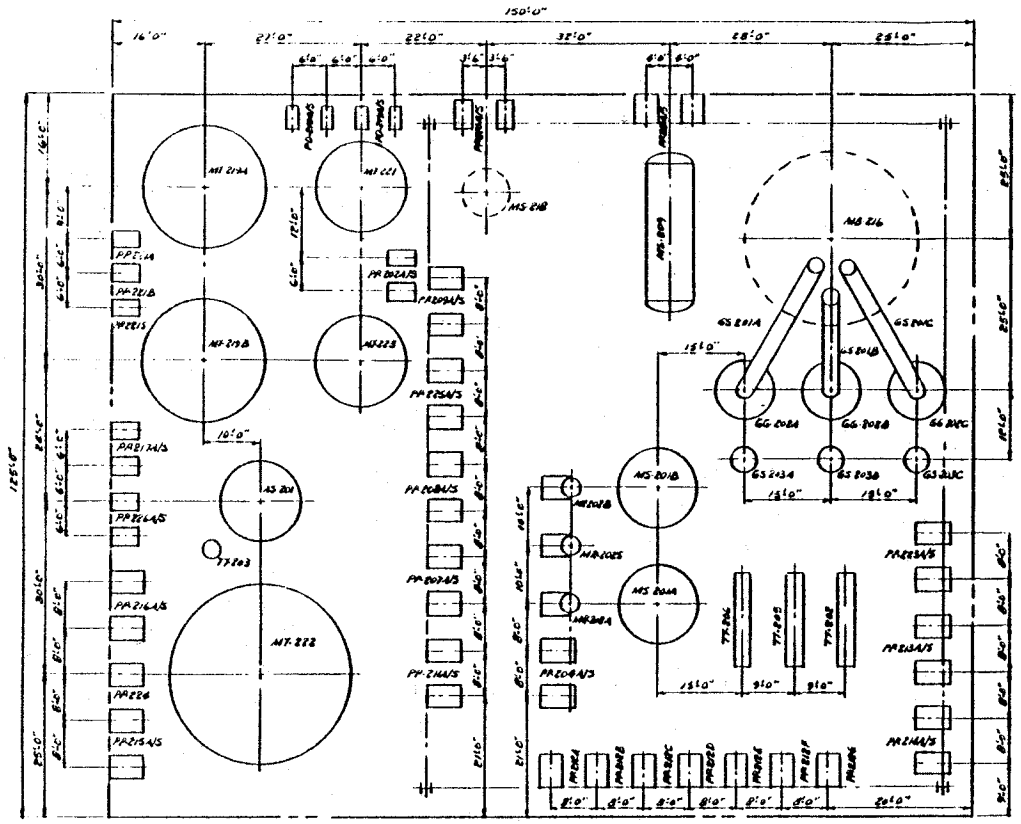

PLAN @ GRADE
200 UNIT- ACID HYDROLYSIS
SCALE: 1" = 10'-0"

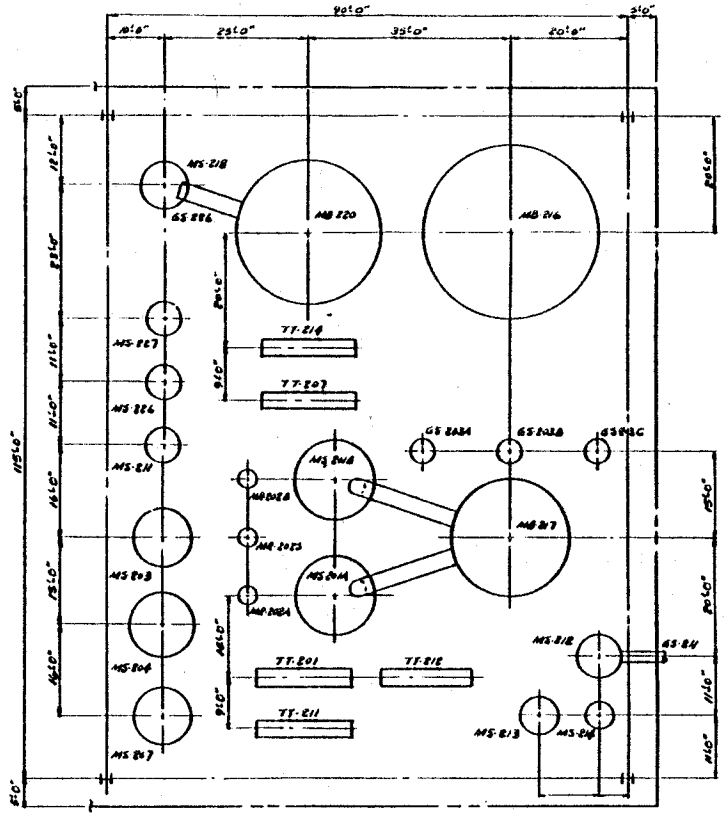

PLAN @ 1ST LEVEL EL +30'±
200 UNIT - ACID HYDROLYSIS
SCALE: 1" = 10'-0"

NOTE:
FOR PLAN @ 2ND LEVEL SEE DWG E0461-102-3

II			REVISED FOR FINAL REPORT			

EQUIPMENT LOCATION PLAN
25 MM GAL/YR
ACID BASED WOOD TO ETHANOL PLANT
FOR
SOLAR ENERGY RESEARCH INSTITUTE
GOLDEN COLORADO

DRAWN BY M. LECCESE

BADGER ENGINEERS, INC.

SCALE 1" = 10'-0"

DWG NO E0461-102-2 II

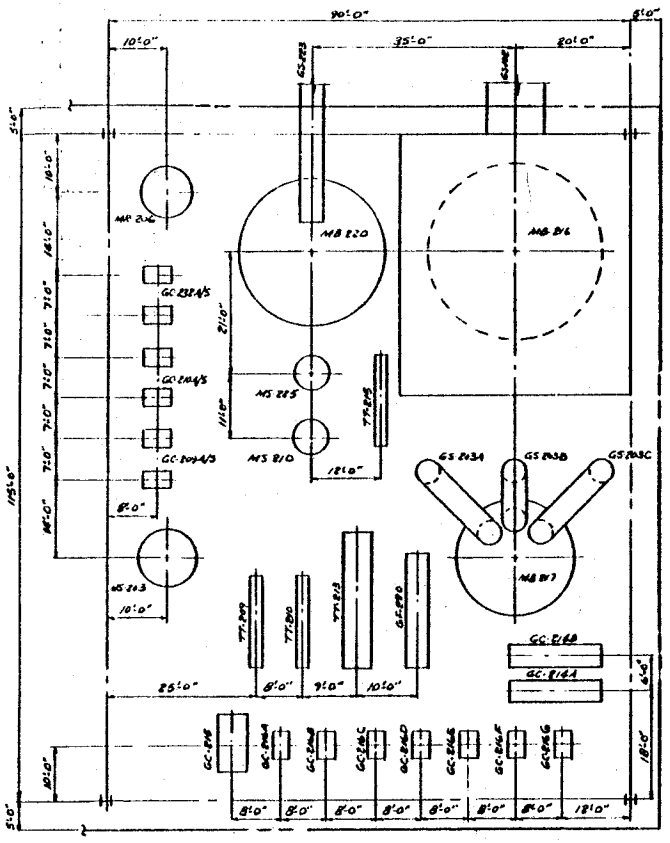

PLAN @ 2ND LEVEL + 60'

200 UNIT - ACID HYDROLYSIS

SCALE: 1"=10'-0"

NOTE:
FOR PLAN @ GRADE AND PLAN @ 1ST LEVEL
SEE DWG. E0461-102-2

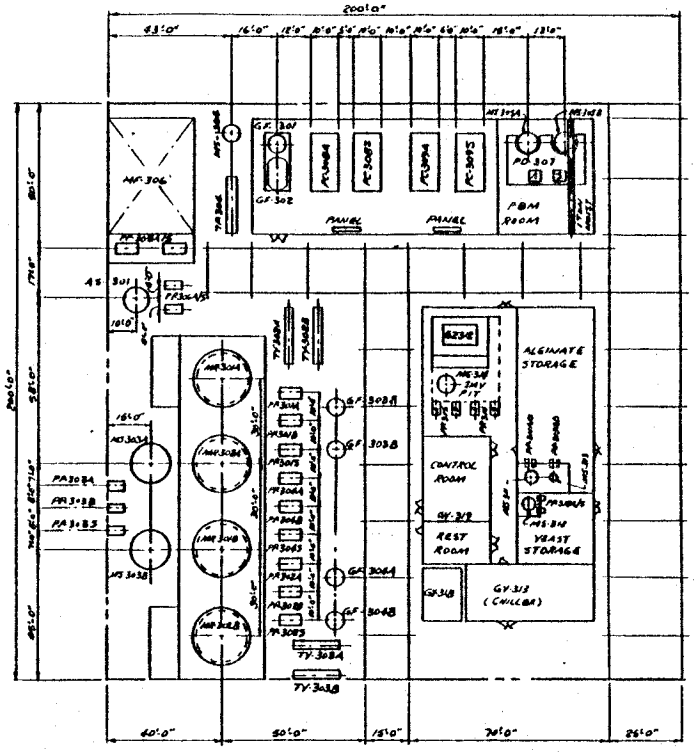

PLAN @ GRADE

300 UNIT - FERMENTATION

SCALE: 1"=20'-0"

EQUIPMENT LOCATION PLAN
25 MM GAL/YR.
ACID BASED WOOD TO ETHANOL PLANT
FOR
SOLAR ENERGY RESEARCH INSTITUTE
GOLDEN COLORADO

BADGER ENGINEERS, INC.

DWG NO E0461-102-3

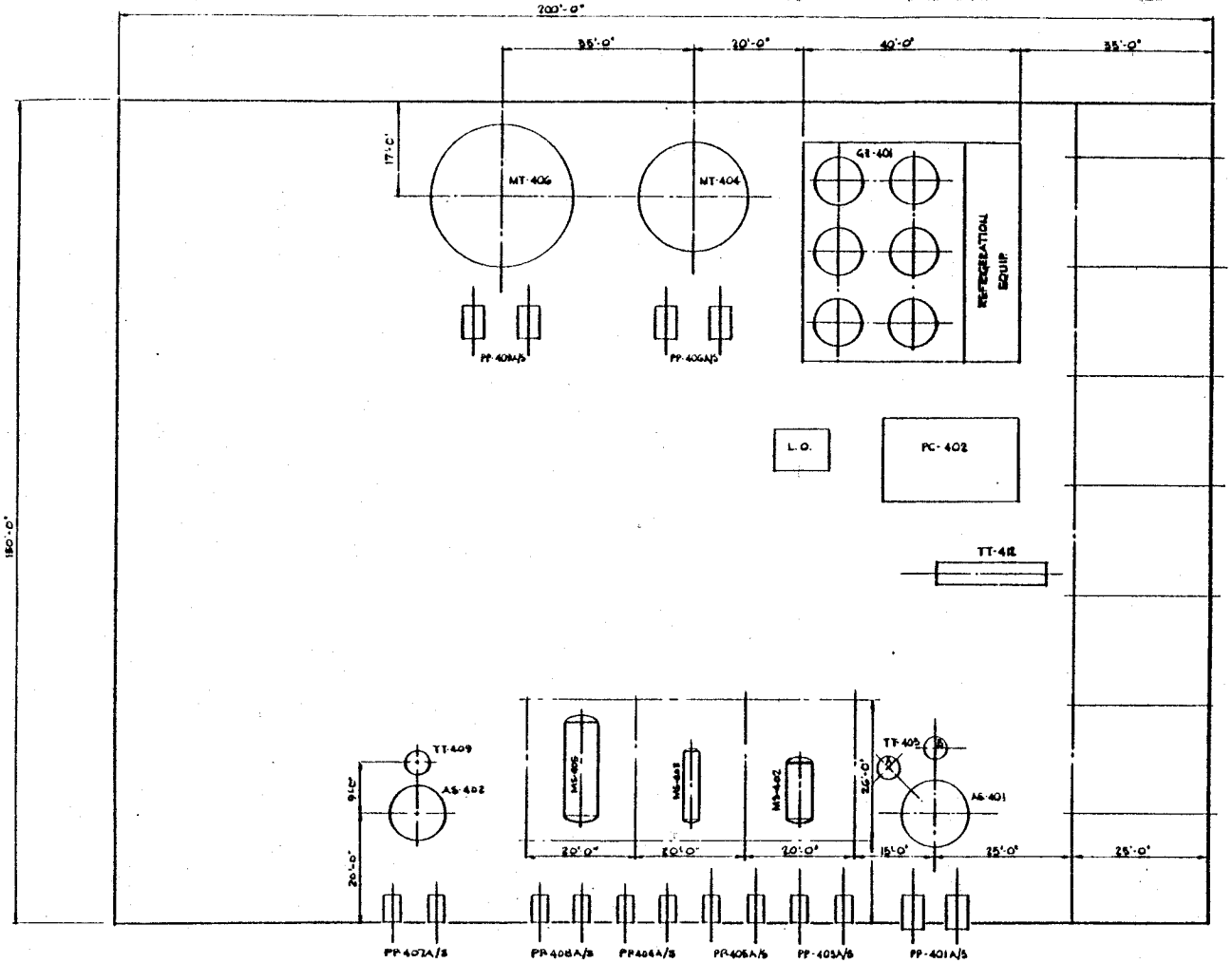

PLAN @ GRADE - 400 UNIT
ETHANOL PURIFICATION
SCALE: 1" = 10'-0"

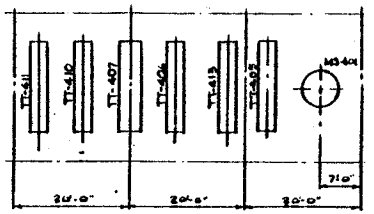

PLAN @ 1ST LEVEL -
ETHANOL EXCHANGER STRUCTURE
SCALE: 1" = 10'-0"

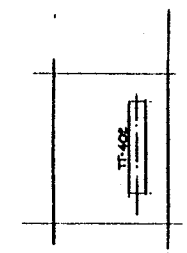

PLAN @ 2ND LEVEL

II					
I		RH	REVISED FOR FINAL REPORT		
			PRELIMINARY FOR ESTIMATE		

EQUIPMENT LOCATION PLAN
25 MM GAL/YR.
ACID BASED WOOD TO ETHANOL PLANT
FOR
SOLAR ENERGY RESEARCH INSTITUTE
GOLDEN COLORADO

DRAWN BY R. HISTEN

BADGER ENGINEERS, INC.

SCALE 1" = 10'-0"

DWG NO E0461-102-4 II

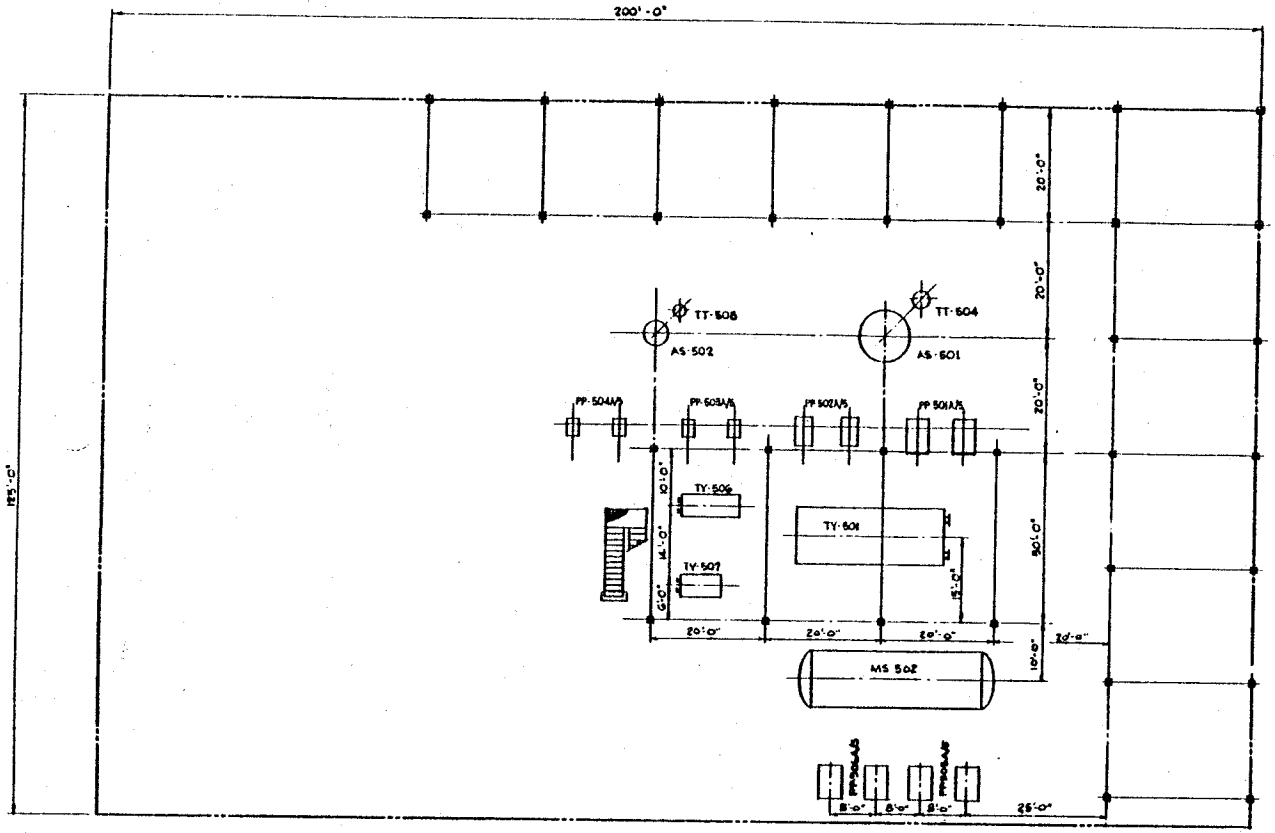

500 UNIT - PLAN @ GRADE
FURFURAL PURIFICATION
SCALE: 1"=10'-0"

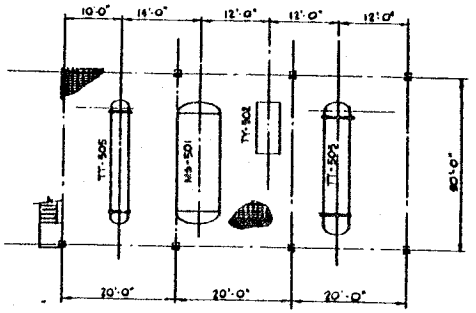

PLAN @ EL. 24'-0"
FURFURAL EXCHANGER STRUCTURE
SCALE: 1"=10'-0"

II		REVISED FOR FINAL REPORT	
I		PRELIMINARY FOR ESTIMATE	

EQUIPMENT LOCATION PLAN
25 MM GAL/YR.
ACID BASED WOOD TO ETHANOL PLANT
FOR
SOLAR ENERGY RESEARCH INSTITUTE
GOLDEN COLORADO

DRAWN BY R HISTEN

BADGER ENGINEERS, INC.

SCALE 1"=10'-0"

DWG. NO. E0461-102-5 II

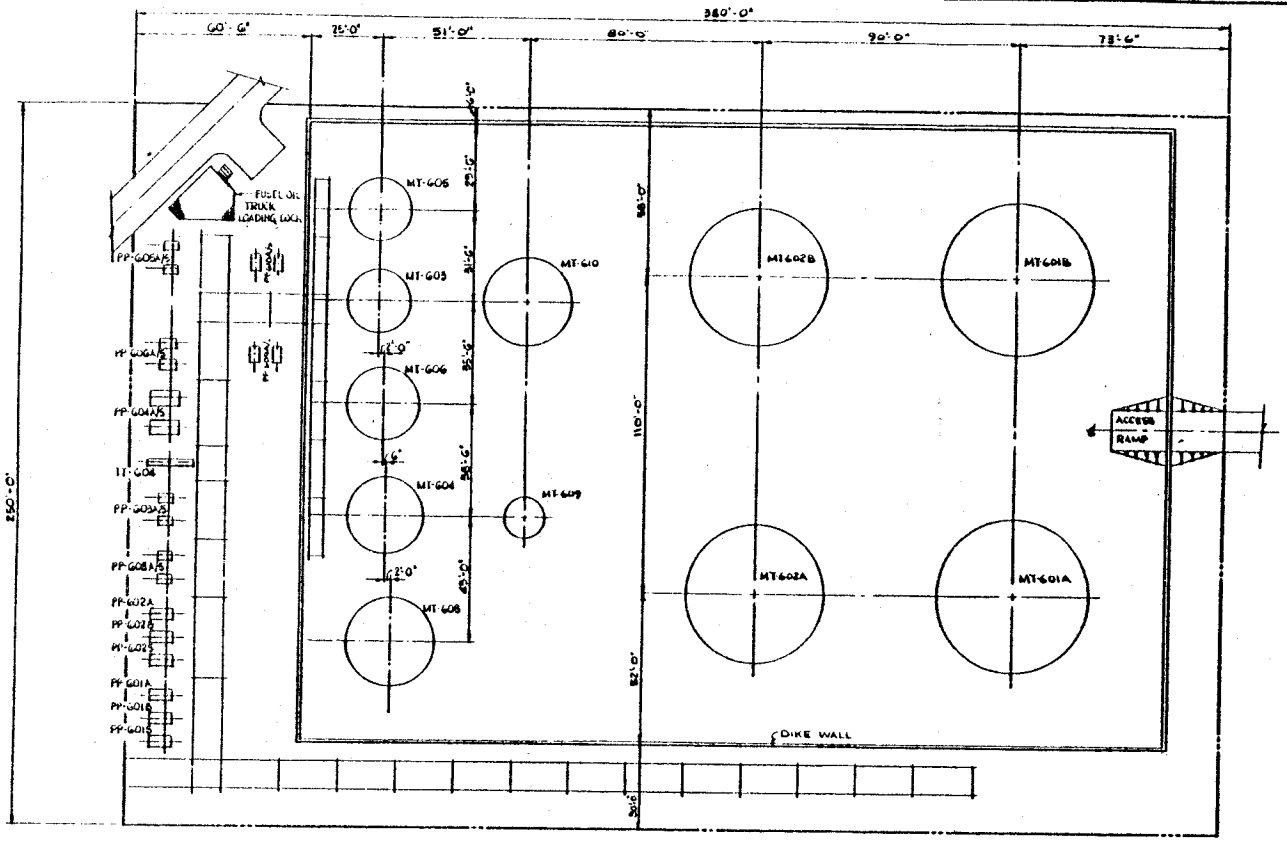

PLAN @ GRADE
600 UNIT - TANKAGE
SCALE: 1"=20'-0"

II			REVISED FOR FINAL REPORT
I			PRELIMINARY FOR ESTIMATE

EQUIPMENT LOCATION PLAN
25 MM GAL./YR.
ACID BASED WOOD TO ETHANOL PLANT
FOR
SOLAR ENERGY RESEARCH INSTITUTE
GOLDEN COLORADO

DESIGNED BY R. HISTEN

BADGER ENGINEERS, INC.
CAMBRIDGE, MASS.

SCALE: 1"=20'-0"

DWG NO E0461-102-6 II

THIS DOCUMENT CONTAINS PROPRIETARY INFORMATION BELONGING TO BADGER ENGINEERS, INC. AND SHALL NOT BE USED OR DISCLOSED FOR ANY PURPOSE EXCEPT AS EXPRESSLY PERMITTED BY WRITTEN AGREEMENT WITH BADGER ENGINEERS, INC. IT SHALL NOT BE USED IN WHOLE OR IN PART FOR ANY PURPOSE FOR WHICH IT WAS NOT SUPPLIED. IT SHALL NOT BE COPIED, REPRODUCED OR OTHERWISE USED, NOR SHALL SUCH INFORMATION BE FURNISHED IN WHOLE OR IN PART TO OTHERS EXCEPT IN ACCORDANCE WITH THE TERMS OF ANY AGREEMENT UNDER WHICH IT WAS SUPPLIED OR WITH THE PRIOR WRITTEN CONSENT OF BADGER ENGINEERS, INC. AND SHALL BE RETURNED UPON REQUEST.

BADGER ENGINEERS, INC.

A Raytheon Company

CAMBRIDGE, MASS.

EQUIPMENT LIST

DESIGN CASE I

25 MM GAL/YR ACID BASED WOOD TO ETHANOL PLANT

FOR

SOLAR RESEARCH INSTITUTE

GOLDEN, COLORADO

BADGER JOB NO. E-0461

SERI S/C NO. 2X-3-03096-2

ISSUE	DATE	DESCRIPTION	CH'K'D	APP'D
1	12-7-82	For Final Report		

CERTIFIED

ENG _____ DATE _____

_____ DATE _____

CLIENT _____ DATE _____

SHEET 1 OF

SPE-0461-EL-5C

BE-UE-3-1 (8/82)

UNIT	DESCRIPTION
100	Wood Chip Handling
200	Acid Hydrolysis
300	Fermentation
400	Ethanol Purification
500	Furfural Purification
600	Offsite Tankage
700	Environmental
800	Utilities

EQUIPMENT PIECE COUNT*

EQUIPMENT ACCOUNT	ACTUAL	UNIQUE	EQUIVALENT	REMARKS
AS Towers	6	6		
MT	21	19		
MF	4	4		
MR	8	4		
MS/MB	39	36		
PP	169	75		
PB	7	4		
PC	4	3		
PE	2	2		
PD	13	6		
TT	35	34		
TP	2	2		
TY	8	6		
GA		16		
GF	12	10		
G (Balance)	68	41		
H	3	2		
JC	-	-		
Totals	419	270		
B (Bldg)	12	12		

BE-UE-3-2 (Rev. 3/83)

EQUIPMENT LIST
ACCT. "G"

Client SERI — Signature

Unit Feedstock Handling — Location Unit 100

Item No.	Name	Mat'l.	P & I	Duty - Description - Remarks
GE-101	Wood Bucket Conveyor	CS	1	To remove chips from washing pond at 500 tons per hour (2,000 cu. yd/hr). Consider possibility of using radial stacker.
GS-102	Jet Belt Conveyor	CS	1	150 tons/hr chips (612 yd^3/hr) to process (package unit).
GF-103	Chip Pile Screen	CS	1	Vibrating screen with 6" apertures; dim's 20' x 25' wide.
GM-104 A,B,S	Front End Loader	-	1	Caterpillar Type 936 CAT 7.3 yd^3 bucket - one F/E Loader to manage chip pile one to feed belt conveyor.
GS-105	Magnetic Chip Cleaner	CS	1	5 kw Ding (Lexington, MA) to remove down to ½" nuts and bolts
GM-106 A,B	Yard Switching Engines	-	1	100 HP diesel
GY-107	Wood Chip Truck Unloader	-	1	100 HP, hydraulic oil oper.
GY-108	Wood Chip Truck Scale	-	1	In-ground mech. lever type
GY-109	Wood Chip Rail Car Scale	-	1	

NOTE: Above data (except for Item No. and Name) shall not be used for design purposes. For this purpose the data on the relevant specification/data sheets shall be used.

EQUIPMENT LIST
ACCT. P - PUMPS

Client SERI — Signature

Unit Feedstock Handling — Location Unit 100

Item No.	Name	Capacity gpm	Δp psi	Motor h.p.	Mat'l.	P & I	Remarks *(WT. LBS.)
PP-101	Flume Pump	2000	5	10	CS	1	To wash chips and drain washing pit

*Including driver and baseplate

NOTE: Above data (except for Item No. and Name) shall not be used for design purposes. For this purpose the data on the relevant specification/data sheets shall be used.

BE-UE-2-3 (8/82)

EQUIPMENT LIST
ACCT. A - TOWERS

Client SERI — Signature

Unit Acid Hydrolysis — Location Unit 200

Item No.	Name	Dia. ft. / Ht. ft.	No. Trays	Design: Press. psig.	Design: Temp. °F	Mat'l.	P & I	Remarks *(WT. KIPS.)
AS-210	Sugar Stripper	13' 6" / 40' 0"	20 Sieve	15 FV	275	CS	5	25' skirt
AS-201T	Lot Sieve Trays for AS-201		20			CS	5	

* Estimated erection weight. (Excluding insulation and attachments)

NOTE: Above data (except for Item No. and Name) shall not be used for design purposes. For this purpose the data on the relevant specification/data sheets shall be used.

BE-UE-2-1 (8/82)

EQUIPMENT LIST
ACCT. M - VESSELS

Client SERI — Signature

Unit Acid Hydrolysis — Location Unit 200

Item No.	Name	Dia. ft. / Lth. ft.	H V	Design Press. psig	Design Temp. °F	Mat'l.	P & I	Remarks *(WT. KIPS.)
MS-201 A,B	Slurry Vessel	4000 gal 525 cu ft conical	V	150 FV	500	316L	2	Jayco/Vrieco Conical mixer ~~(see quotation)~~
MR-202 A,B,S	Hydrolysis Reactor	0'-10" 25'-0"	V	1200 FV	750	See remarks	2	Zirconium lined carbon steel
MS-203	High Pressure Flash Drum	10'-0" 16'-0"	V	200 FV	420	316L	2	With 16'6" long 30° cone bottom
MS-204	Low Pressure Flash Drum	11'-6" 22'-0"	V	50 FV	310	316L	2	
MR-206	Neutralisation Reaction Tank	9'-0" 25'-0"	V	50 FV	250	CS	3	
MS-207	Gypsum Hydroclone	10'-0" 30'-0"	V	50 FV	250	CS	4	
MS-209	Aqueous Furfural Drum	8'-0" 24'-0"	H	50 FV	25	304L	5	
MS-210	1st Stage Wash Tank	6'-0" 18'-0"	V	50 FV	25	304L	3	
MS-211	2nd Stage Lignin Feed Tank	6'-0" 18'-0"	V	50 FV	200	304L	3	
MS-212	Lignin Sludge Tank	7'-0" 20'-0"	V	Atmos	200	304L	3	with agitator 60° cone bottom
MS-213	Gypsum Wash Tank Tank	6'-0" 18'-0"	V	50 FV	200	CS	4	
MS-214	Gypsum Filter Feed Tank	4'-0" 12'-0"	V	50 FV	200	Rubber lined CS	4	

* Estimated erection weight. (Excluding insulation and attachments)

NOTE: Above data (except for Item No. and Name) shall not be used for design purposes. For this purpose the data on the relevant specification/data sheets shall be used.

BE-UE-2-2 (8/82)

EQUIPMENT LIST
ACCT. M - VESSELS

Client SERI — Signature

Unit Acid Hydrolysis — Location Unit 200

Item No.	Name	Dia. ft. / Lth. ft.	H V	Design Press. psig	Design Temp. °F	Mat'l.	P & I	Remarks *(WT. KIPS.)
MB-216	Chip Feed Bin	15'-0" / 40'-0"	V	Atm.	100	CS	2	Activated Bottom Disch.
MB-217	Ground Wood Bin	20'-0" / 20'-0"	V	Atm.	250	CS	2	Activated bottom disch. ~~60° sloped btm.~~
MS-218	Lime Mix Tank	8'-0" / 8'-0"	V	25	200	CS	6	Flat top with agitator
MT-219 A,B	Lime Slurry Day Tanks	21'-0" / 24'-0"	V	Atm.	150	CS	6	API with top agitator
MB-220	Lime Storage Bin	25'-0" / 50'-0"	V	Atm.	150	CS	6	Storage silo with 21'-0" lg ~~60° cone base~~
MT-221	Sulfuric Acid Day Tank	15'-0" / 16'-0"	V	Atm.	150	CS	6	API
MT-222	Sugar Stripper Feed Tank	32'-0" / 32'-0"	V	Atm.	200	CS	5	API with 4' x 2' DP sump and internal ~~baffles on inlet~~ and outlet
MT-223	Hydrolysis Process Water Tank	14'-6" / 16'-0"	V	Atm.	200	CS	6	API Epoxy lined
MF-224	Lime Unloading Pit	20'x50' x3'	-	Atm.		Conc.	6	Below ground
MS-225	2nd Stage Wash Tank	6'-0" / 18'-0"	V	25	250	304L	3	
MS-226	3rd Stage Lignin Feed Tank	6'-0" / 18'-0"	V	25	250	304L	3	
MS-227	Dewatering Centrifuge Feed Tank	6'-0" / 18'-0"	V	25	250	304L	3	

* Estimated erection weight. (Excluding insulation and attachments)

NOTE: Above data (except for Item No. and Name) shall not be used for design purposes. For this purpose the data on the relevant specification/data sheets shall be used.

EQUIPMENT LIST
ACCT. P - PUMPS

Client SERI **Signature**

Unit Acid Hydrolysis **Location** Unit 200

Item No.	Name	Capacity gpm	Δp psi	Motor h.p.	Mat'l.	P & I	Remarks *(WT. LBS.)
PD-201 A,B,S	Hydrolysis Feed Pump	815 Worthington	860	700	Alloy	2	See A,B,S quotation
PP-202 A,S	Feed Water Pump	1100	340	300	CS	6	
PP-204 A,S	Lignin Slurry Pump	1850	36	60	Duriron	2	
PP-207 A,S	1st Stage Underflow Pump	570	15	15	Duriron	3	25-30% Lignin Slurry
PP-208 A,S	2nd Stage Underflow Pump	500	20	20	Duriron	3	25-30% Lignin Slurry
PP-209 A,S	Alkaline Hydrolysate Pump	1570	20	25	CD4 MCU	3	
PD-210 A,S	Acid Dosing Pump	0.1	20	0.1	Duriron	6	Gear Type
PP-211 A,S	Gypsum Hydroclone Feed Pump	1650	50	60	CD4 MCU	4	
PP-212 A to G	Gypsum Hydroclone Pumps	200	30	15	CD4 MCU	4	7 total
PP-213 A,S	Gypsum Wash Pump	100	35	10	CS	4	
PP-214 A,S	Gypsum Filter Pump	100	20	10	CD4 MCU	4	
PP-215 A,S	Sugar Stripper Feed Pump	1550	35	40	CS	5	

*Including driver and baseplate

NOTE: Above data (except for Item No. and Name) shall not be used for design purposes.
For this purpose the data on the relevant specification/data sheets shall be used.

EQUIPMENT LIST
ACCT. P - PUMPS

Client SERI — Signature

Unit Acid Hydrolysis — Location Unit 200

Item No.	Name	Capacity gpm	Δp psi	Motor h.p.	Mat'l.	P & I	Remarks *(WT. LBS.)
PP-216 A,S	Lime Slurry Liquor Pump	100	40	10	CS	5	Intermittent Operation (Batch)
PP-217 A,S	Sugar Stripper Pump	1550	50	60	CS	5	
PP-218 A,S	Aqueous Furfural Pump	800	55	40	Duriron	5	
PD-219 A,S	Sulphuric Acid Feed Pump	10	275	10	Duriron	6	Gear
PP-220 A,S	Lime Mixing Pump	250	25	10	Duriron	6	
PP-221 A,B,S	Lime Slurry Pump	150	35	10	Duriron	6	
PP-223 A,S	Gypsum Filter Wash Pump	60	20	5	CS	4	
PP-224	Sump Pump	250	35	15	CS	5	Intermittent Operation
PP-225	3rd Stage Lignin Underflow Pump	500	20	20	Duriron	3	25-30% Lignin Slurry
PP-226	Sugar Stripper Reboiler Pump	300	125	40	Duriron	5	
PP-227	Hydrolyzate Reheater Pump	150	15	2	Duriron	4	

*Including driver and baseplate

NOTE: Above data (except for Item No. and Name) shall not be used for design purposes. For this purpose the data on the relevant specification/data sheets shall be used.

EQUIPMENT LIST
ACCT. T - HEAT EXCHANGERS

Client SERI — Signature

Unit Acid Hydrolysis — Location Unit 200

Item No.	Name	Area ft^2	Tube Mat'l. D.P. psig D.T. °F	Shell Mat'l. D.P. psig D.T. °F	Type	P & I	Remarks *(WT. KIPS.)
TT-201	Primary Feedwater Preheater	16,000	304L 200/FV 420	CS 400 400	BEM	2	
TT-202	H.P. Flash Vapor Aftercooler	4,000	304L 200/FV 420	CS 400 350	BEM	2	
TT-203	Sugar Stripper Reboiler	8,500	304L 200 420	304L 40 400	CEN	5	Vertical Thermosyphon
TT-205	Aqueous Furfural Cooler	5,100	304L 200 320	CS 100 150	BEM	2	
TT-206	Hydrolysate Cooler	11,000	CS 120 275	CS 100 200	BEM	5	
TT-207	Acid Water Heater	2,500	304L 400 500	CS 1250 600	BEM	2	
TT-209	Slurry Cooler	11,000	304L 100 300	CS 400 300	BEM	3	
TT-210	Sugar Stripper Preheater	11,000	CS 100 250	CS 120 275	BEM	5	
TT-211	Secondary Feedwater Preheater	13,000	304L 25/FV 300	CS 400 300	BEM	2	
TT-212	L.P. Flash Vapor Aftercooler	3,000	304L 100 300	CS 100 150	BEM	2	
TT-213	Hydrolyzate Reheater	12,500	304L 100/FV 300	CS 25/FV 300	BEM	4	
TT-214	Overflow Cooler	7,400	CS 100 150	CS 100 150	BEM	4	
TT-215	Slurry Vessel Vent Condenser	100	CS 150 400	CS 100 150	BEM	2	

*Estimated erection weight. (Excluding insulation and attachments)

NOTE: Above data (except for Item No. and Name) shall not be used for design purposes. For this purpose the data on the relevant specification/data sheets shall be used.

EQUIPMENT LIST

ACCT. G - Misc. Equip.

Client SERI Signature

Unit Acid Hydrolysis Location Unit 200

Item No.	Name	Mat'l.	P & I	Duty - Description - Remarks
GS-201 A,B,C	Chip Screen	CS	2	110,000 lb/hr, 1" raw wood chips HP-20 RPM Diam. Length 10'0" (approx.)
GG-202 A,B,C	Grinder	CS	2	110,000 lb/hr "through 20 mesh wood" grinds HP - 3,000 See C.E. Bauer quote.
GS-203 A,B,C	Wood Grinds Conveyor	CS	2	110,000 lb/hr wood grinds (thru 20 mesh) HP - 25 Height - 60'-0"
GA-204 A/B	High Pressure Feeder	316L	2	210,000 lb/hr wood grinds (thru 20 mesh) from atmos. press. to 150 psig 30 HP See Ingersoll Rand quote.
GA-205 A,B	Wood Slurry Agitator	316L	2	HP-75 (approx) conical screen mixer. See Jayco Vrieco quote.
GA-207	Static Mixer	316L	2	790 gpm (1.2% H_2SO_4 @ 350°F) Diam: 10"
GC-209 A/B	1st Stage Lignin Centrifuge	316L	3	1500 gpm P 35 psi Type H-36 Dorr Oliver (Merco) 200 HP See Dorr Oliver Quotation
GC-210 A/B	2nd Stage Lignin Centrifuge	316L	3	450 gpm; 200 HP, Type H-36 Dorr Oliver Merco
GS-211 A,B,C	Lignin Sludge Screws	304L	3	95000 lb/hr moist lignin sludge HP-10 RPM GPM 300 Length 100 feet (Allowance)
GA-212	1st Stage Lignin Feed Tank Agitator	304L	3	HP 3 Prop. type Diam 3'-0"
GA-213	Neutralization Tank Agitator	CS	3	HP-10 Propellor type Diam. = 5'-0"
GC-214 A/B	Lignin Dewatering Centrifuge	316L	3	250 GPM Feed; 200 GPM discharged sludge; HP=150 Type Solid Bowl (See quote)
GC-215	Primary Gypsum Hydroclone	Nylon	4	1650 GPM solid See Bauer & Dorr-Oliver Quotes

NOTE: Above data (except for Item No. and Name) shall not be used for design purposes. For this purpose the data on the relevant specification/data sheets shall be used.

EQUIPMENT LIST

ACCT. G - Misc. Equip.

Client SERI Signature

Unit Acid Hydrolysis Location Unit 200

Item No.	Name	Mat'l.	P & I	Duty - Description - Remarks
GC-216 A to G	Gypsum Washing Hydroclones	Nylon	4	190 GPM Total of 7 See Bauer quote or Dorr quote
GA-217	Gypsum Filter Tank Agitator	304L	4	HP - 1 Diam = 24"
GA-219	Gypsum Hydroclone Feed Tank Agitator	CS	4	20 HP Diam = 5'-0"± Prop. type
GF-220	Gypsum Rotary Filter	CS	4	50,000 lb/hr feed slurry (30% solids) to wash and produce 70% solids cake; 20 ft^2 rotary filter; includes vacuum equipment
GA-222	Lignin Sludge Tank Agitator	316L	3	10 HP; helical or prop type; diam = 5'-0"
GC-232A/B	3rd Stage Lignin Centrifuge	316L	3	450 GPM; Type H-36 Dorr Oliver (Merco); 200 HP
GA-233	2nd Stage Lignin Feed Tank Agitator	304L	3	HP-3; Diam 3'-0"; Prop type
GA-234	3rd Stage Lignin Feed Tank Agitator	304L	3	HP-3; Diam 3'-0"; Prop type

NOTE: Above data (except for Item No. and Name) shall not be used for design purposes. For this purpose the data on the relevant specification/data sheets shall be used.

EQUIPMENT LIST

ACCT. G - Misc. Equip.

Client SERI — Signature

Unit Acid Hydrolysis — Location Unit 200

Item No.	Name	Mat'l.	P & I	Duty - Description - Remarks
GS-223	Lime Unloading Conveyor	CS	6	Intermittent Operation 200,000 lb/hr pulverised lime 120 ft. high; 50 HP; Redler type
GA-224	Lime Mix Tank Agitator	304L	6	10 HP; propellor type
GS-225	Lime Solids Feeder	CS	6	20,000 lb/hr rotary feed valve
GS-226	Lime Mixing Conveyor	CS	6	20,000 lb/hr horizontal belt type conveyor weigh feeder
GC-227	Lime Dust Cyclone	CS	6	250 ASFM Air; 15 lb/hr solids
GA-228A/B	Lime Slurry Day Tank Agitator	304L	6	25 HP Propellor type
GY-229	Oversize Wood Grind Screen	CS	2	Vibrating screen Diam - 20'0"
GA-230	Gypsum Wash Tank Agitator	CS	4	5 HP; propellor type Diam 4'-0", length 8'-0"
GS-231 A,B	Wood Grinds Belt Feeder	CS	2	3'-0"x10'-0" LG 170,000 lb/hr wood @ 50% moisture

NOTE: Above data (except for Item No. and Name) shall not be used for design purposes. For this purpose the data on the relevant specification/data sheets shall be used.

EQUIPMENT LIST
ACCT. A - TOWERS

Client SERI — Signature

Unit Fermentation — Location Unit 300

Item No.	Name	Dia. ft. / Ht. ft.	No. Trays	Design Press. psig.	Design Temp. °F	Mat'l.	P & I	Remarks *(WT. KIPS.)
AS-301	Scrubber	7'-3" 23'-0" Packed height 16'-5"	Packed	1.5	110	CS	8	
		1" Plastic Raschig Rings Packing volume 36.9 m^3						

* Estimated erection weight. (Excluding insulation and attachments)

NOTE: Above data (except for Item No. and Name) shall not be used for design purposes. For this purpose the data on the relevant specification/data sheets shall be used.

BE-UE-2-1 (8/82)

EQUIPMENT LIST
ACCT. M - VESSELS

Client SERI — Signature

Unit Fermentation — Location Unit 300

Item No.	Name	Dia. ft. / Lth. ft.	H V	Design Press. psig	Design Temp. °F	Mat'l.	P & I	Remarks *(WT. KIPS.)
MR-301 A,B	#1 Fermenter	17'-0" 60'-0"	V	1.5	105	CS	7	Internal Draft-tube (see sketch)
MR-302 A,B	#2 Fermenter	17'-0" 60'-0"	V	1.5	105	CS	7	Internal Draft-tube (see sketch)
MS-303 A,B	IMY Regeneration Tank	13'-0" 25'-6"	V	50	105	CS	8	With jacket (see sketch)
MS-304	Air Receiver	6'-0" 14'-0"	V	75	150	CS	7	(see sketch)
MS-305 A,B	PBM Tank	7'-0" 12'-0"	V	Atmos + water full	150	CS	7	(see sketch)
MF-306	Blowdown Pit	250 m^3		Atmos + full water		Conc	7	In-ground
MS-311	Resin Tank	4'-0" 4'-0"	V	Atmos + water full	125	304L	9	
MS-312	Yeast Liquid Tank	2'-0" 2'-0"	V	Atmos + water full	125	304L	9	
MS-313	Alginate Tank	2'-6" 2'-6"	V	Atmos + water full	125	304L	9	With jacket designed to 35 psig +125°F (see sketch)
MS-314	CA Tank	6'-0" 8'-0"	V	Atmos + water full	105	Epoxy Coated CS	9	
MF-315	IMY Storage Pit	30'x40' x10' deep	V			Conc	9	nground

* Estimated erection weight. (Excluding insulation and attachments)

NOTE: Above data (except for Item No. and Name) shall not be used for design purposes. For this purpose the data on the relevant specification/data sheets shall be used.

BE-UE-2-2 (8/82)

EQUIPMENT LIST
ACCT. P - PUMPS

Client SERI **Signature**

Unit Fermentation **Location** Unit 300

Item No.	Name	Capacity gpm	Δp psi	Motor h.p.	Mat'l.	P & I	Remarks *(WT. LBS.)
PP-301 A,B,S	#1 Broth Recycle Pump	1295	50	50	CI	7	
PP-302 A,B,S	#2 Broth Recycle Pump	1100	50	40	CI	7	
PP-303 A,B,S	Broth Transfer Pump	450	35	20	CI	8	
PP-304 A,B,S	IMY Transfer Pump	450	35	20	CI	7	
PP-305 A,S	Chemical Feed Pump	350	50	25	CI	7	
PP-306 A,S	Scrubber Pump	250	35	15	CI	8	
PD-307 A,S	PBM Pump	3	50	1	PVC	7	Reciprocating
PC-308 A,S	Air Compressor	350 SCFM	50	75	CI	7	Oil Free Reciprocating
PB-309 A,S	Recycle Blower	850 SCFM	50	160	CI	8	Nash/root Blower
PP-311 A,S	Polymer Pump	10	25	1.5	304SS	9	
PP-312 A,S	Yeast Pump	10	25	1.5	304SS	9	
PD-313 A,S	Feed Pump	0.2	25	0.5	304SS	9	
PP-314 A,S	IMY Feed Pump	100	35	5	304SS	9	
PP-315 A,S	CA - Pump	1.5	35	1.5	304SS	9	

*Including driver and baseplate

NOTE: Above data (except for Item No. and Name) shall not be used for design purposes.
For this purpose the data on the relevant specification/data sheets shall be used.

EQUIPMENT LIST
ACCT. T - HEAT EXCHANGERS

Client SERI | Signature

Unit Fermentation | Location Unit 300

Item No.	Name	Area ft²	Tube Mat'l. D.P. psig D.T. °F	Shell Mat'l. D.P. psig D.T. °F	Type	P & I	Remarks *(WT. KIPS.)
TY-302 A,B	#1 Broth Cooler	4600	Plate 304L	Frame 304L	Plate & Frame	7	NBR Gaskets
TY-303 A,B	#2 Broth Cooler	3200	Plate 304L	Frame 304L	Plate & Frame	7	NBR Gaskets
TP-304	Air Heater	4	CS	CS	Double Pipe	7	

*Estimated erection weight. (Excluding insulation and attachments)

NOTE: Above data (except for Item No. and Name) shall not be used for design purposes. For this purpose the data on the relevant specification/data sheets shall be used.

EQUIPMENT LIST
ACCT. "G"

Client SERI — Signature

Unit Fermentation — Location Unit 300

Item No.	Name	Mat'l.	P & I	Duty - Description - Remarks
GF-301	Air Prefilter	PVA	7	Glass Wool Packed; 350 SCFM Design Pressure 50 psig
GF-302	Air Filter	PVA	7	Depth Filter ; ; 350 SCFM Design pressure = 50 psig
GF-303 A,B	#1 Auto Strainer	304L SS	7	Rotary Brush Type 1300 GPM Design Pressure 60 psig
GF-304 A,B	#2 Auto Strainer	304L SS	7	Rotary Brush Type 1100 GPM Design Pressure 60 psig
GA-305	PBM Tank Agitator	CS	7	HP 2 Propellor type
GA-311	Line Mixer	304L SS	9	Mechanical in-line mixer 0.3 HP 0.3 GPM
GZ-312	Yeast Immobilising Unit	304L SS	9	Package Unit 0.5 GPM 50 HP Total cost for Seattle - 40.5 million yen (JGC)
GY-313	Chiller Unit		9	80,000 BTU/hr 20 HP Brine circulation supply temp. 0°C Package unit
GA-314	Resin Tank Agitator	304L SS	9	0.5 HP Propellor type
GA-315	Yeast Liquid Tank Agitator	304L SS	9	0.5 HP Propellor type
GA-316	Alginate Tank Agitator	304L SS	9	0.5 HP Propellor type
GA-317	CA Tank Agitator	304L SS	9	5 HP Propellor type
GY-318	Emergency Chiller Unit		7	1.1 mm BTU/hr Package unit 250 HP
GL-319	Lab Equipment		-	For Fermentation unit see attached sheets.

NOTE: Above data (except for Item No. and Name) shall not be used for design purposes. For this purpose the data on the relevant specification/data sheets shall be used.

EQUIPMENT LIST
ACCT. A - TOWERS

Client SERI — Signature

Unit Ethanol Purification — Location Unit 400

Item No.	Name	Dia. ft. / Ht. ft.	No. Trays	Design: Press. psig.	Design: Temp. °F	Mat'l.	P & I	Remarks *(WT. KIPS.)
AS-401	Beer Column	12'-6" / 32'-0"	16 sieve	15 FV	300	CS	10	20 ft. skirt
AS-401T	Lot Sieve Trays for AS-401		16			CS	-	
AS-402	Rectification Column	10'-0" / 44'-0"	24 sieve	15 FV	300	CS	11	20 ft. skirt
AS-402T	Lot Sieve Trays for AS-402		24			CS	-	

* Estimated erection weight. (Excluding insulation and attachments)

NOTE: Above data (except for Item No. and Name) shall not be used for design purposes. For this purpose the data on the relevant specification/data sheets shall be used.

BADGER ENGINEERS, INC.	ISSUE	DATE	SHEET 20OF	SPE-0461-EL-5C

BE-UE-2-1 (8/82)

EQUIPMENT LIST
ACCT. M - VESSELS

Client SERI **Signature**

Unit Ethanol Purification **Location** Unit 400

Item No.	Name	Dia. ft. / Lth. ft.	H / V	Design Press. psig	Design Temp. °F	Mat'l.	P & I	Remarks *(WT. KIPS.)
MS-401	Degasser Drum	6'-0" 18'-0"	V	15 FV	300	CS	10	
MS-402	Beer Column Reflux Drum	3'-6" 11'-0"	H	50 FV	250	CS	10	
MS-403	Fusel Oil Decanter	3'-6" 12'-0"	H	25 FV	150	CS	11	with baffle
MT-404	Molecular Sieve Feed Tank	20'-0" 16'-0"	V	Atm.	250	CS	11	API
MS-405	Rectification Column Reflux Drum	6'-0" 18'-0"	H	50 FV	250	CS	11	
MT-406	Dilute Beer Feed Tank	26'-0" 32'-0"	V	6"WC Atm.	200	CS	10	API type

*Estimated erection weight. (Excluding insulation and attachments)

NOTE: Above data (except for Item No. and Name) shall not be used for design purposes. For this purpose the data on the relevant specification/data sheets shall be used.

EQUIPMENT LIST
ACCT. P - PUMPS

Client SERI **Signature**

Unit Ethanol Purification **Location** Unit 400

Item No.	Name	Capacity gpm	Δp psi	Motor h.p.	Mat'l.	P & I	Remarks *(WT. LBS.)
PP-401 A,S	Beer Column Bottoms Pump	1450	50	60	DI	10	
PC-402	Sugar Stripper Vapor Compressor	32,000 ACFM	23	3500	CI	10	
PP-403 A,S	Beer Column Reflux Pump	220	60	15	DI	10	
PP-404 A,S	Wash Return Pump	30	60	5	DI	11	
PP-405 A,S	Fusel Oil Pump	5	40	1	DI	11	
PP-406 A,S	Molecular Sieve Feed Pump	65	114	15	DI	11	
PP-407 A,S	Rectification Column Bottoms Pump	120	40	5	DI	11	
PP-408 A,S	Rectification Column Reflux Pump	260	60	15	DI	11	
PP-409 A,S	Dilute Beer Feed Pump	1450	50	60	DI	10	

*Including driver and baseplate

NOTE: Above data (except for Item No. and Name) shall not be used for design purposes. For this purpose the data on the relevant specification/data sheets shall be used.

EQUIPMENT LIST
ACCT. T - HEAT EXCHANGERS

Client SERI — Signature

Unit Ethanol Purification — Location Unit 400

Item No.	Name	Area ft^2	Tube Mat'l. D.P. psig D.T. °F	Shell Mat'l. D.P. psig D.T. °F	Type	P & I	Remarks *(WT. KIPS.)
TT-402	Degasser Drum Condenser	1500	CS 100 300	CS 25/FV 300	BEM	10	
TT-403 A,B	Beer Column Reboilers	Total 20,000	CS 25/FV 400	CS 100 350	CEN	10	Vertical Thermosyphon
TT-405	Beer Column Condenser	6,000	CS 100 150	CS 15/FV 300	BEM	10	
TT-406	Beer Column Vent Condenser	7,000	CS 100 150	CS 15/FV 250	BEM	10	
TT-407	Fusel Oil Cooler	300	CS 25 250	CS 100 150	BEM	11	
TT-409	Rectification Column Reboiler	9,100	CS 25/FV 350	CS 100 350	CEN	11	Vertical Thermosyphon
TT-410	Rectification Column Condenser	3,500	CS 100 150	CS 15/FV 300	BEM	11	
TT-411	Rectification Column Vent Condenser	7,000	CS 100 150	CS 15/FV 250	BEM	11	
TT-412	Aqueous Furfural Cooler	6,000	304L 40 400	CS 100 150	BEM	10	
TT-413	Feed Preheater	20,000	304L 40 400	CS 100 400	BEM	10	

*Estimated erection weight. (Excluding insulation and attachments)

NOTE: Above data (except for Item No. and Name) shall not be used for design purposes. For this purpose the data on the relevant specification/data sheets shall be used.

EQUIPMENT LIST
ACCT.

Client SERI Signature

Unit Ethanol Purification Location Unit 400

Item No.	Name	Mat'l.	P & I	Duty - Description - Remarks
GZ-401	Molecular Sieve		11	Package Unit to produce 25 mm gal/yr dehydrated ethanol from 181 proof alcohol - see Kemp information

NOTE: Above data (except for Item No. and Name) shall not be used for design purposes.
For this purpose the data on the relevant specification/data sheets shall be used.

EQUIPMENT LIST
ACCT. A - TOWERS

Client SERI — Signature

Unit Furfural Recovery — Location Unit 500

Item No.	Name	Dia. ft. / Ht. ft.	No. Trays	Design Press. psig.	Design Temp. °F	Mat'l.	P & I	Remarks *(WT. KIPS.)
AS-501	Azeo Column	9'-0" / 60'-0"	25 sieve	15	300	304L	12	20' skirt
AS-501T	Lot Sieve Trays for AS-501		25			304L	12	
AS-502	Dehydration Column	4'-0" / 20'-0"	11 sieve	15	400	CS	12	10' skirt
AS-502T	Lot Sieve Trays for AS-502		11			CS	12	

* Estimated erection weight. (Excluding insulation and attachments)

NOTE: Above data (except for Item No. and Name) shall not be used for design purposes. For this purpose the data on the relevant specification/data sheets shall be used.

BE-UE-2-1 (8/82)

EQUIPMENT LIST
ACCT. M - VESSELS

Client SERI — Signature

Unit Furfural Recovery — Location Unit 500

Item No.	Name	Dia. ft. / Lth. ft.	H V	Design Press. psig	Design Temp. °F	Mat'l.	P & I	Remarks *(WT. KIPS.)
MS-501	Furfural Decanter	7'-0" 21'-0"	H	100	250	304L	12	With internal baffle
MS-502	Solvent Decanter	10'-0" 30'-0"	H	100	300	304L	12	With internal baffle

*Estimated erection weight. (Excluding insulation and attachments)

NOTE: Above data (except for Item No. and Name) shall not be used for design purposes. For this purpose the data on the relavant specification/data sheets shall be used.

BE-UE-2-2 (8/82)

BADGER ENGINEERS, INC. | ISSUE | DATE | SHEET 26OF | SPE-0461-EL-5C

EQUIPMENT LIST
ACCT. P - PUMPS

Client SERI — Signature

Unit Furfural Recovery — Location Unit 500

Item No.	Name	Capacity gpm	Δp psi	Motor h.p.	Mat'l.	P & I	Remarks *(WT. LBS.)
PP-501 A,S	Azeo Column Bottoms Pump	700	35	30	CI	12	
PP-502 A,S	Azeo Column Reflux Pump	120	60	10	CI	12	
PP-503 A,S	Dehydration Column Feed Pump	40	35	5	CI	12	
PP-504 A,S	Dehydration Column Bottoms Pump	30	35	5	CI	12	
PP-505 A,S	Solvent Pump	700	35	30	CI	12	
PP-506 A,S	Furfural Waste Water Pump	700	35	30	CI	12	

*Including driver and baseplate

NOTE: Above data (except for Item No. and Name) shall not be used for design purposes. For this purpose the data on the relevant specification/data sheets shall be used.

EQUIPMENT LIST
ACCT. T - HEAT EXCHANGERS

Client SERI — Signature

Unit Furfural Recovery — Location Unit 500

Item No.	Name	Area ft^2	Tube Mat'l. D.P. psig D.T. °F	Shell Mat'l. D.P. psig D.T. °F	Type	P & I	Remarks *(WT. KIPS.)
TY-501	Azeo Column Preheater	23,000	304L SS / 100 / 300		Plate	12	Plate type
TY-502	Azeotrope Aftercooler	600	304L SS / 50 / 250		Plate	12	Plate type
TT-503	Azeo Column Condenser	4,000	304L SS / 50 / 300	CS / 100 / 150	BEM	12	
TT-504	Azeo Column Reboiler	11,000	304L SS / 50 / 350	CS / 150 / 350	BEM	12	
TT-505	Dehydration Column Condenser	2,000	CS / 50 / 350	CS / 100 / 150	BEM	12	
TY-506	Dehydration Column Preheater	500	CS / 50 / 350	— / —	Plate	12	Plate type
TY-507	Furfural Product Cooler	120	CS / 50 / 350	— / —	Plate	12	Plate type
TT-508	Dehydration Column Reboiler	2000	CS / 250 / 400	CS / 250 / 400	BEM	12	

* Estimated erection weight. (Excluding insulation and attachments)

NOTE: Above data (except for Item No. and Name) shall not be used for design purposes. For this purpose the data on the relevant specification/data sheets shall be used.

EQUIPMENT LIST
ACCT. M - VESSELS

Client SERI — Signature

Unit Offsite Storage Tankage — Location Unit 600

Item No.	Name	Dia. ft. / Lth. ft.	H V	Design Press. psig	Design Temp. °F	Mat'l.	P & I	Remarks *(WT. KIPS.)
MT-606	Azeo Stripper Surge Tank	25'-0" 24'-0"	V	6"WG Atm	200	CS	13	API Type
MT-604	Fermentation Feed Tank	26'-0" 32'-0"	V	6"WG Atm	250	CS	13	API Type Insulated
MT-601 A,S	Ethanol Product Tank	52'-0" 32'-0"	V	6"WG Atm	200	CS	13	API Type Floating Roof
MT-608	Slops Tank	30'-0" 24'-0"	V	6"WG Atm	220	CS	13	API Type Insulated & steam traced
MT-607	Fire Water Tank	52'-0" 32'-0"	V	6"WG Atm	220	CS	13	API Insulated & steam traced
MT-602 A,B	Furfural Product Tank	48'-0" 32'-0"	V	6"WG Atm	250	CS	13	API Type Floating Roof
MT-603	Sulphuric Acid Storage	21'-0" 24'-0"	V	6"WG Atm	200	CS	13	API Type
MT-605	Fusel Oil Storage	21'-0" 16'-0"	V	6"WG Atm	250	CS	13	API Type Floating Roof
MT-609	Diesel Fuel Tank	15'-0" 16'-0"	V	6"WG Atm	150	CS	13	API Type Floating Roof
MT-610	Gasoline Storage Tank	30'-0" 32'-0"	V	6"WG Atm	150	CS	13	API Type Floating Roof

* Estimated erection weight. (Excluding insulation and attachments)

NOTE: Above data (except for Item No. and Name) shall not be used for design purposes. For this purpose the data on the relevant specification/data sheets shall be used.

BADGER ENGINEERS, INC. A Raytheon Company | ISSUE | DATE | SHEET 29 OF | SPE-0461-EL-5C

EQUIPMENT LIST
ACCT. P - PUMPS

Client SERI **Signature**

Unit Offsite Storage Tankage **Location** Unit 600

Item No.	Name	Capacity gpm	Δp psi	Motor h.p.	Mat'l.	P & I	Remarks *(WT. LBS.)
PP-606 A/S	Azeo Stripper Feed Pump	800	60	40	DI	13	
PP-604 A/S	Fermentation Feed Pump	1550	70	100	DI	13	
PP-601 A,B,S	Ethanol Product Pump	525	30	20	CS	13	
PP-608 A,S	Slops Transfer Pump	100	40	10	CI	13	
PP-607 A,S	Fire Water Pump	600	100	60	CS	13	
PP-602 A,B,S	Furfural Export Pump	500	30	35	CS	13	
PP-603 A,S	Sulphuric Acid Transfer Pump	100	40	15	CI	13	
PP-605 A,S	Fusel Oil Export Pump	100	30	10	CI	13	
PP-609 A,S	Diesel Fuel Pump	25	50	5	CS	13	
PP-610 A,S	Gasoline Blending Pump	30	30	3	CS	13	

*Including driver and baseplate

NOTE: Above data (except for Item No. and Name) shall not be used for design purposes. For this purpose the data on the relevant specification/data sheets shall be used.

EQUIPMENT LIST
ACCT. T - HEAT EXCHANGERS

Client SERI — Signature

Unit Offsite Storage Tankage — Location Unit 600

Item No.	Name	Area ft^2	Tube Mat'l. D.P. psig D.T. °F	Shell Mat'l. D.P. psig D.T. °F	Type	P & I	Remarks *(WT. KIPS.)
TT-604	Fermentation Feed Cooler	10,000	CS 100 250	CS 100 150	BEM	13	Plate type

*Estimated erection weight. (Excluding insulation and attachments)

NOTE: Above data (except for Item No. and Name) shall not be used for design purposes. For this purpose the data on the relevant specification/data sheets shall be used.

EQUIPMENT LIST

ACCT.

Client SERI — Signature

Unit Offsite Storage Tankage — Location Unit 600

Item No.	Name	Mat'l.	P & I	Duty - Description - Remarks
GF-604	Air Vent Filter	CS	13	Depth Filter, Glass Wool Cartridge Element, 350 SCFM; ΔP max -2"WG
GF-603	Dessicant Air Filter	CS	13	Silica gel dessicant; max P 2"WG on vent air for MS-803 diameter 1ft. x length 3 ft.

NOTE: Above data (except for Item No. and Name) shall not be used for design purposes. For this purpose the data on the relevant specification/data sheets shall be used.

BE-UE-2-5 (8/82)

BADGER ENGINEERS, INC.	ISSUE	DATE	SHEET 32 OF	SPE-0461-EL-5C

EQUIPMENT LIST
ACCT. B - Buildings

Client SERI Signature

Unit Offsite Storage Tankage Location Unit 600

Item No.	Name	Mat'l.	P & I	Duty - Description - Remarks
B-1	Administration Building	Conc + Brick		
B-2	Maintenance Building	Corr siding on steel		
B-3	Warehouse Building	Corr siding on steel		60 ft W x 200 ft Lg x 40 ft H for drum and bag storage with winter space heating from steam pipes; 2 doors each end; small office; lunch room.
B-4	Control & Electrical Building	Conc Block		
B-5	Acid Hydrolysis Process Building	Corr siding on steel		
B-6	Fermentation Process Building	Corr siding on steel		
B-7	Fire Pump House	Corr siding on steel		
B-8	Truck Weigh Scale House	Wood		Heated by steam.
B-9	Boiler House	Corr siding on steel		Includes boilers, BFW treating, deaerators.
B-10	Gate House #1	Wood		
B-11	Gate House #2	Wood		
B-12	Well Water Pump House	Corr siding on steel		

NOTE: Above data (except for Item No. and Name) shall not be used for design purposes. For this purpose the data on the relevant specification/data sheets shall be used.

BE-UE-2-5 (8/82)

EQUIPMENT LIST
ACCT. M - VESSELS

Client SERI — Signature

Unit Environmental — Location Unit 700

Item No.	Name	Dia. ft. / Lth. ft.	H V	Design Press. psig	Design Temp. °F	Mat'l.	P & I	Remarks *(WT. KIPS.)
MS-701	Hotwell Decanter	11'-6" 35'-0"	H	15	200	304L	14	With internal baffle.
MT-702	Mixed Solvent Tank	30'-0" 32'-0"	V	6"WG Atm	200	CS	14	API floating roof.
MT-703	Equalization Tank	-					15	
MT-704	Anaerobic Reactor	-					15	
MS-705	Reactor Surge Drum	-					15	
MS-706	Offgas K.O. Pot	-					15	
MT-707	Biotreater	50'-0" 24'-0"	V	Open top	150	CS Epoxy lined	16	API Tank Open Top
MS-708	Filter Feed Tank	16'-0" 20'-0"	V	Atm	150	CS Epoxy lined	16	
MF-709	Filtrate Sump	4'x4' x6' dp	V	Atm	Amb	Conc	16	Below ground
MS-710	LP Vent K.O. Drum	3'-0" 9'-0"	V	15	150	CS	17	With wire mesh mist eliminator

* Estimated erection weight. (Excluding insulation and attachments)

NOTE: Above data (except for Item No. and Name) shall not be used for design purposes. For this purpose the data on the relevant specification/data sheets shall be used.

EQUIPMENT LIST
ACCT. P - PUMPS

Client SERI — Signature

Unit Environmental — Location Unit 700

Item No.	Name	Capacity gpm	Δp psi	Motor h.p.	Mat'l.	P & I	Remarks *(WT. LBS.)
PP-701 A,S	First Effect Pump	1050	20	20	CD4 MCU	14	
PP-702 A,S	Second Effect Pump	600	30	15	CD4 MCU	14	
PP-703 A,S	Third Effect Pump	150	55	7½	CD4 MCU	14	
PE-704	Evaporator Vacuum System	115 lb/hr Air	Suction Press 2.5 psia	-	304L	14	With condenser 50ft^2
PP-705 A,S	Evaporator Wastewater Pump	1,250	40	40	304L	14	
PP-706 A,S	Solvent Pump	5	35	1	DI	14	
PP-707 A,S	Mixed Solvent Pump	300	40	10	DI	14	
PP-708 A,S	Reactor Feed Pump	-	-	-	-	15	
PP-709	Reactor Recycle Pump	-	-	-	-	15	
PB-710	Offgas Blower	-	-	-	-	15	
PE-711	Equalization Tank Eductor	-	-	-	-	15	
PB-712 A/S	Aeration Blowers	840 SCFM		50	CI	16	
PP-713 A/S	Sludge Pumps	650	20	15	DI	16	
PD-714 A,S	Filter Feed Pumps	85	15	25	DI	16	
PP-715	Filtrate Sump Pump	50	30	3	DI	16	

*Including driver and baseplate

NOTE: Above data (except for Item No. and Name) shall not be used for design purposes. For this purpose the data on the relevant specification/data sheets shall be used.

BE-UE-2-3 (8/82)

EQUIPMENT LIST
ACCT. P - PUMPS

Client SERI — Signature

Unit Environmental — Location Unit 700

Item No.	Name	Capacity gpm	Δp psi	Motor h.p.	Mat'l.	P & I	Remarks *(WT. LBS.)
PP-716 A/S	Final Effluent Pumps	700	40	30	CI	16	
PB-717 A,S	L.P. Vent Blower	2400 ACFM	5	25	CI	17	

*Including driver and baseplate

NOTE: Above data (except for Item No. and Name) shall not be used for design purposes. For this purpose the data on the relevant specification/data sheets shall be used.

EQUIPMENT LIST
ACCT. T - HEAT EXCHANGERS

Client SERI — Signature

Unit Environmental — Location Unit 700

Item No.	Name	Area ft^2	Tube Mat'l. D.P. psig D.T. °F	Shell Mat'l. D.P. psig D.T. °F	Type	P & I	Remarks *(WT. KIPS.)
TT-701	First Effect Heater	26,000	CS 50/FV 350	CS 100 350	BEM	14	
TT-702	Second Effect Heater	26,000	CS 50/FV 300	CS 25/FV 300	BEM	14	
TT-703	Third Effect Heater	26,000	304L 50/FV 250	304L 25/FV 250	BEM	14	
TT-704	Evaporator Condenser	28,000	304L 100 150	304L 100/FV 250	BEM	14	
TT-705	Stillage Cooler	10,000	304L 100 150	304L 50 250	BEM	14	
TP-706	Solvent Cooler	40	CS 100 150	CS 50 250	BEM	14	

*Estimated erection weight. (Excluding insulation and attachments)

NOTE: Above data (except for Item No. and Name) shall not be used for design purposes. For this purpose the data on the relevant specification/data sheets shall be used.

EQUIPMENT LIST
ACCT. "C" - Special

Client SERI — Signature

Unit Environmental — Location Unit 700

Item No.	Name	Mat'l.	P & I	Duty - Description - Remarks
CE-701	First Effect Evaporator	CS	14	12'-0" dia x 18'-0" high plus cone bottom 25 psig/FV, 300°F
CE-702	Second Effect Evaporator	CS	14	15'-0" dia x 20'-0" high plus cone bottom 25 psig/FV, 250°F
CE-703	Third Effect Evaporator	304L	14	20'-0" dia x 18'-0" high plus cone bottom 25 psig/FV, 250°F
CF-704	Rotary Filter	CS	14	2,000 lb/hr, 10 sq. ft.
CU-705	Reactor Feed Heater	-	15	
CQ-706	Offgas Burner	-	15	
CV-707	Biotreater Agitators	Poly-ethylene	16	40 Kenic S type static aerator tubes 12" diam. x 16' lg.
CV-708	Secondary Clarifier	CS	16	80'-0" diam. center feed clarifier x 11'-0" sidewall with sludge rake and skimmer above grade, 2 HP motor
CV-709	Polymer Feed System	SS or plastic	16	Automated system for batch make-up, transfer to storage, & injection into process.
CV-710	Belt Filter Press	CS	16	Horizontal belt filter press 2 meters.
CA-711	Polymer Mixer	CS	16	In-line static mixer 3" ø
CA-712	Filter Feed Tank	CS	16	Side Mtd Impeller Type Agitator located on MS-708; HP-7.5
	Flame Arrestor			
	MT-704 A,B Packing License			

NOTE: Above data (except for Item No. and Name) shall not be used for design purposes. For this purpose the data on the relevant specification/data sheets shall be used.

EQUIPMENT LIST
ACCT. M - VESSELS

Client SERI **Signature**

Unit Utilities **Location** Unit 800

Item No.	Name	Dia. ft. / Lth. ft.	H V	Design Press. psig	Design Temp. °F	Mat'l.	P & I	Remarks *(WT. KIPS.)
MT-801	Process Water Tank	50'-0" 40'-0"	V	Atm	200	CS	19	API
MS-802	Blowdown Flash Drum	3'-0" 10'-0"	V	50/FV	350	CS	20	
MS-803	Hydrazine Drum	250 gals	V	10	200	316L SS	20	
MS-804	Condensate Surge Drum	10'-0" 30'-0"	H	15	250	CS	20	
MF-805	Backwash Transfer Tank	22'-0" 4'-0"	V	Atm	Amb	CS	19	
MS-806	Plant Air Receiver	5'-0" 16'-0"	V	150	150	CS	23	
MS-807	Instrument Air Receiver	5'-0" 16'-0"	V	150	150	CS	23	

* Estimated erection weight. (Excluding insulation and attachments)

NOTE: Above data (except for Item No. and Name) shall not be used for design purposes. For this purpose the data on the relevant specification/data sheets shall be used.

EQUIPMENT LIST
ACCT. P - PUMPS

Client SERI — Signature

Unit Utilities — Location Unit 800

Item No.	Name	Capacity gpm	Δp psi	Motor h.p.	Mat'l.	P & I	Remarks *(WT. LBS.)
PP-802 A,S	Process Water Transfer Pumps	2400	31	75	DI	19	
PP-803 A,S	Process Water Circulating Pump	5000	60	250	DI	19	
PP-804 A,B	Backwash Feed Pumps	6000	21	125	DI	19	
PP-805 A,B	Backwash Transfer Pumps	50	21	1.5	DI	19	
PP-806 A,S	Blowdown Pump	50	25	3	DI	20	
PP-807	Hydrazine Transfer Pump	5	20	1	316SS	20	
PP-808 A,S	H.P. BFW Pump	1700	1250	2750	Chrome Steel	20	Multistage
PP-809 A,S	Deaerator Feed Pump	1700	20	40	DI	20	
PP-810 A,S	Turbine Condensate Pump	650	40	30	DI	21	
PC-811	Air Compressor	1000 SCFM	125	250	CS	23	Oil free recip with coolers and ancillaries
PP-812 A-H	Cooling Water Circ. Pumps	7500	60	350	CI	22	Motor drives qty. = 8
PP-813 A,B,S	Well Water Pumps	2000	25	50	DI	19	

*Including driver and baseplate

NOTE: Above data (except for Item No. and Name) shall not be used for design purposes. For this purpose the data on the relevant specification/data sheets shall be used.

EQUIPMENT LIST

ACCT. C

Client SERI Signature

Unit Utilities Location Unit 800

Item No.	Name	Mat'l.	P & I	Duty - Description - Remarks
GF-801	Sand Filter	CS	19	34'-0" dia. x 8'-0"; 18" sand, 18" anthracite
GU-803 A,B	Demineralizers		20	2 bed, skid mounted, 400 GPM capacity at 50 psig, 100 F, with intermediate degasifier, regeneration equipment, required tanks, pumps
				and auxiliaries and chemical storage for 14 days operation. Permutit or equal.
GU-804 A,S	Condensate Polisher	SS	20	Duplex bed; 1,400 GPM capacity
GU-805	Condensate Collection System		20	2,000 gal. tank with two 1,700 GPM, 70 ft. head pumps, CS, rubber lined.
GV-806	Deaerator	CS shell SS internals	20	30 psig/FV, 300 F, 1700 GPM capacity, 17,000 gals. storage. To reduce dissolved oxygen to 0.005 cc/l.
GU-807	Hydrazine Addition Unit	316L SS	20	150 gal. tank and two metering pumps, 0.1 to 5 GPH.
GU-808	Ammonia Addition Unit	Chrome Steel	20	150 gal. tank and two metering pumps, 0.1 to 5 GPH.
GU-809	Phosphate Addition Unit	316L SS	20	150 gal. tank with agitator and two metering pumps, 0.1 to 5 GPH.
GY-810	Instrument Air Dryer	CS	23	600 SCFM, dual tower, dessicant type, electric heater regeneration
GZ-811	Turbo Generator	-	21	44.5 mw See next sheet for details
GT-812	Cooling Tower	Internals vendor Std	22	60,000 GPM, inlet temp. 118 F, outlet 88 F, heat load 900 mm BTU air; New England temps: dry bulb 88F, wet bulb 74 F.

NOTE: Above data (except for Item No. and Name) shall not be used for design purposes. For this purpose the data on the relevant specification/data sheets shall be used.

EQUIPMENT LIST
ACCT. C

Client SERI — Signature

Unit Utilities — Location Unit 800

Item No.	Name	Mat'l.	P & I	Duty - Description - Remarks
CZ-811	Turbogenerator Rated steam in: 1100 psia; 874°F 522,110 lb/hr		21	
	steam out: 150 psig, 22,500 lb/hr 50 psig, 344,600 lb/hr			
	Total electrical generation 44.5 mw Supply 480V, 60 Hz, 3 pH 120/208V, 60 Hz, 3 pH (4 wire)			
	With turbine condenser: 30,000 ft^2, 180 mm BTU/hr CS/CS and vacuum ejector set and controls.			

NOTE: Above data (except for Item No. and Name) shall not be used for design purposes. For this purpose the data on the relevant specification/data sheets shall be used.

BE-UE-2-5 (8/82)

EQUIPMENT LIST
ACCT. H

Client SERI — Signature

Unit Utilities — Location Unit 800

Item No.	Name	Mat'l.	P & I	Duty - Description - Remarks
HB-801 A,B	Steam Boilers			18
	Steam rate:(actual)		357,500	lb/hr (each)
	(design)		400,000	lb/hr (each)
	Pressure:		1100 psia	
	Temp.		874°F	
	Feedwater temp.:		212°F	
	Absorbed heat load: (actual)		446 mm BTU/hr (each)	
	Efficiency:		85.0 percent	
	Total fuel available:			
	Process liquids:		63,000 lb/hr, LHV = 7100 BTU/lb	
	Process vent gas:		11,000 SCF/hr, LHV = 544 BTU/SCF	
	Lignin/tar solids:		50,000 lb/hr	
	Auxiliary startup fuel: Diesel oil			
	Each boiler to be able to take full solids flow			
	Use Flakt system for lignin and tar; common system for both boiler covers:			
	Drying			
	and			
	Particulate emission control			
	Note: (1) Each boiler produces 50% of the total steam make. This corresponds to 64% of process requirements.			
	(2) Each boiler is rated for 110% of actual steam make.			
HC-803	Common stack, concrete, 270 ft. high, 12'-0" ø			
	self supporting (allowance - to be confirmed)			

NOTE: Above data (except for Item No. and Name) shall not be used for design purposes. For this purpose the data on the relevant specification/data sheets shall be used.

BE-UE-2-5 (8/82)

THIS DOCUMENT CONTAINS PROPRIETARY INFORMATION BELONGING TO BADGER ENGINEERS, INC. OR ITS AFFILIATED COMPANIES AND SHALL BE USED ONLY FOR THE PURPOSE FOR WHICH IT WAS SUPPLIED. IT SHALL NOT BE COPIED, REPRODUCED OR OTHERWISE USED, NOR SHALL SUCH INFORMATION BE FURNISHED IN WHOLE OR IN PART TO OTHERS, EXCEPT IN ACCORDANCE WITH THE TERMS OF ANY AGREEMENT UNDER WHICH IT WAS SUPPLIED OR WITH THE PRIOR WRITTEN CONSENT OF BADGER ENGINEERS, INC. AND SHALL BE RETURNED UPON REQUEST.

BADGER ENGINEERS, INC.

A Raytheon Company

CAMBRIDGE, MASS.

EQUIPMENT LIST

DESIGN CASE II

ALTERNATE CASE

25 MM GAL/YR ACID BASED WOOD TO ETHANOL PLANT

FOR

SOLAR ENERGY RESEARCH INSTITUTE

GOLDEN, COLORADO

BADGER JOB NO. E-0461

SERI S/C NO. ZX-3-03096-2

ISSUE	DATE	DESCRIPTION	CH'K'D	APP'D

CERTIFIED

ENG _____ DATE _____

_____ DATE _____

CLIENT_____ DATE _____

SHEET 1 OF

SPE-0461-EL-5D

BE-UE-3-1 (8/82)

EQUIPMENT LIST
ACCT. "C"

Client SERI — Signature

Unit Feedstock Handling (Alt. Case) — Location Unit 100

Item No.	Name	Mat'l.	P & I	Duty - Description - Remarks
GE-101	Wood Bucket Conveyor	CS	1	To remove chips from washing pond at 500 tons per hour (2,000 cu. yd/hr). Consider possibility of using radial stacker
GS-102	Jet Belt Conveyor	CS	1	150 tons/hr chips (612 yd^3/hr) to process (package unit).
GF-103	Chip Pile Screen	CS	1	Vibrating screen with 6 apertures; dim's 20' x 25' wide
GM-104 A,B,S	Front End Loader	-	1	Caterpillar Type 936 CAT 7.3 yd^3 bucket - one F/E Loader to manage chip pile, one to feed belt conveyor
GS-105	Magnetic Chip Cleaner	CS	1	5 kw Ding (Lexington, MA) to remove down to ½" nuts and bolts
GM-106 A,B	Yard Switching Engines	-	1	100 HP diesel
GY-107	Wood Chip Truck Unloader	-	1	100 HP, hydraulic oil oper.
GY-108	Wood Chip Truck Scale	-	1	In-ground mech. lever type
GY-109	Wood Chip Rail Car Scale	-	1	

NOTE: Above data (except for Item No. and Name) shall not be used for design purposes. For this purpose the data on the relevant specification/data sheets shall be used.

EQUIPMENT LIST
ACCT. A - TOWERS

Client SERI — Signature

Unit Acid Hydrolysis (Alt. Case) — Location Unit 200

Item No.	Name	Dia. ft. / Ht. ft.	No. Trays	Design Press. psig.	Design Temp. °F	Mat'l.	P & I	Remarks *(WT. KIPS.)
AS-201	Sugar Stripper	13' 6" / 40' 0"	20 Sieve	15 FV	275	CS	5	25' skirt
AS-201T	Lot Sieve Trays for AS-201		20			CS	5	

* Estimated erection weight. (Excluding insulation and attachments)

NOTE: Above data (except for Item No. and Name) shall not be used for design purposes. For this purpose the data on the relevant specification/data sheets shall be used.

BE-UE-2-1 (8/82)

EQUIPMENT LIST
ACCT. M - VESSELS

Client SERI — Signature

Unit Acid Hydrolysis (Alt. Case) — Location Unit 200

Item No.	Name	Dia. ft. / Lth. ft.	H V	Design Press. psig	Design Temp. °F	Mat'l.	P & I	Remarks *(WT. KIPS.)
MS-201 A,B	Slurry Vessel	4000 gal 525 cu ft conical	V	150 FV	500	316L	2	Jayco/Vrieco Conical mixer (see quotation)
MR-202 A,B,S	Hydrolysis Reactor	0'-10" 25'-0"	V	1200 FV	750	See remarks	2	Zirconium lined carbon steel
MS-203	High Pressure Flash Drum	10'-0" 16'-0"	V	200 FV	420	316L	2	With 16'6" long 30° cone bottom
MS-204	Low Pressure Flash Drum	11'-6" 22'-0"	V	50 FV	310	316L	2	
MR-206	Neutralisation Reaction Tank	9'-0" 25'-0"	V	50 FV	250	CS	3	
MS-207	Gypsum Hydroclone Feed Tank	10'-0" 30'-0"	V	50 FV	250	CS	4	
MS-209	Aqueous Furfural Drum	8'-0" 24'-0"	H	50 FV	25	304L	5	
MS-210	1st Stage Wash Tank	6'-0" 18'-0"	V	50 FV	25	304L	3	
MS-211	2nd Stage Lignin Feed Tank	6'-0" 18'-0"	V	50 FV	200	304L	3	
MS-213	Gypsum Wash Tank Tank	6'-0" 18'-0"	V	50 FV	200	CS	4	
MS-214	Gypsum Filter Feed Tank	4'-0" 12'-0"	V	50 FV	200	Rubber lined CS	4	

* Estimated erection weight. (Excluding insulation and attachments)

NOTE: Above data (except for Item No. and Name) shall not be used for design purposes. For this purpose the data on the relevant specification/data sheets shall be used.

EQUIPMENT LIST
ACCT. M - VESSELS

Client SERI — Signature

Unit 2nd Stage Hydrolysis (Alternative Case) — Location

Item No.	Name	Dia. ft. / Lth. ft.	H V	Design Press. psig	Design Temp. °F	Mat'l.	P & I	Remarks *(WT. KIPS.)
MR-250	2nd Stage Hydrolysis Reactor	0'-7" / 25'-0"	V	1200 / FV	750	Zirconium 2A Lined CS		
MS-251	2nd Stage Slurry Vessel	6'-6" / 18'-0"	V	200	500	316L	2A	
MS-252	2nd Stage H.P. Flash Drum	5'-0" / 10'-0"	V	200 / FV	500	316L	2A	30° Cone Bottom
MS-253	2nd Stage LP Flash Drum	6'-0" / 18'-0"	V	50 / FV	500	316L	2A	30° Cone Bottom
MS-255	2nd Stage Lignin Wash Tank	5'-0" / 12'-0"	V	50	250	304L	2A	
MS-256	2nd Stage Lignin Centrifuge Feed Tank	5'-0" / 12'-0"	V	50	250	304L	2A	
MS-257	Lignin Sludge Tank	8'-0" / 20'-0"	V	Atm	250	304L	2A	
MS-258	Dewatering Centrifuge Feed Tank	5'-0" / 12'-0"	V	Atm	200	304L	2A	
MS-259	Sludge Dilution Vessel	6'-0" / 15'-0"	V	50	200	304L	3	

*Estimated erection weight. (Excluding insulation and attachments)

NOTE: Above data (except for Item No. and Name) shall not be used for design purposes. For this purpose the data on the relevant specification/data sheets shall be used.

EQUIPMENT LIST
ACCT. M - VESSELS

Client SERI — Signature

Unit Acid Hydrolysis (Alt. Case) — Location Unit 200

Item No.	Name	Dia. ft. / Lth. ft.	H V	Design Press. psig	Design Temp. °F	Mat'l.	P & I	Remarks *(WT. KIPS.)
MB-216	Chip Feed Bin	15'-0" / 40'-0"	V	Atm.	100	CS	2	Activated Bottom Disch.
MB-217	Ground Wood Bin	20'-0" / 20'-0"	V	Atm.	250	CS	2	Activated bottom disch. 60° sloped btm.
MS-218	Lime Mix Tank	8'-0" / 8'-0"	V	25	200	CS	6	Flat top with agitator
MT-219 A,B	Lime Slurry Day Tanks	21'-0" / 24'-0"	V	Atm.	150	CS	6	API with top agitator
MB-220	Lime Storage Bin	25'-0" / 50'-0"	V	Atm.	150	CS	6	Storage silo with 21'-0" lg 60° cone base
MT-221	Sulfuric Acid Day Tank	15'-0" / 16'-0"	V	Atm.	150	CS	6	API
MT-222	Sugar Stripper Feed Tank	32'-0" / 32'-0"	V	Atm.	200	CS	5	API with 4' x 2' DP sump and Internal
								baffles on Inlet and outlet
MT-223	Hydrolysis Process Water Tank	14'-6" / 16'-0"	V	Atm.	200	CS	6	API Epoxy lined
MF-224	Lime Unloading Pit	20'x50' x3'	-	Atm.		Conc.	6	Below ground
MS-225	2nd Stage Wash Tank	6'-0" / 18'-0"	V	25	250	304L	3	
MS-226	3rd Stage Lignin Feed Tank	6'-0" / 18'-0"	V	25	250	304L	3	
MS-227	Dewatering Centrifuge Feed Tank	6'-0" / 18'-0"	V	25	250	304L	3	

* Estimated erection weight. (Excluding insulation and attachments)

NOTE: Above data (except for Item No. and Name) shall not be used for design purposes. For this purpose the data on the relevant specification/data sheets shall be used.

EQUIPMENT LIST
ACCT. P - PUMPS

Client SERI **Signature**

Unit Acid Hydrolysis (Alt. Case) **Location** Unit 200

Item No.	Name	Capacity gpm	Δp psi	Motor h.p.	Mat'l.	P & I	Remarks *(WT. LBS.)
PD-201 A,B,S	Hydrolysis Feed Pump	600	860	520	Alloy 20	2	See Worthing. quotation
PP-202 A,S	Feed Water Pump	1100	340	300	CS	6	
PP-204 A,S	Lignin Slurry Pump	1150	36	40	Durifron	2	
PP-207 A,S	1st Stage Lignin Underflow Pump	570	15	15	Durifron	3	
PP-208 A,S	2nd Stage Lignin Underflow Pump	500	20	20	Durifron	3	
PP-209 A,S	Alkaline Hydrolysate Pump	1570	20	25	CD4 MCU	3	
PD-210 A,S	Acid Dosing Pump	0.1	20	0.1	Durifron	6	Gear Type
PP-211 A,S	Gypsum Hydroclone Feed Pump	1650	50	60	CD4 MCU	4	
PP-212 A to G	Gypsum Hydroclone Pumps	200	30	15	CD4 MCU	4	7 total
PP-213 A,S	Gypsum Wash Pump	100	35	10	CS	4	
PP-214 A,S	Gypsum Filter Pump	100	20	10	CD4 MCU	4	
PP-215 A,S	Sugar Stripper Feed Pump	1550	35	40	CS	5	

*Including driver and baseplate

NOTE: Above data (except for Item No. and Name) shall not be used for design purposes. For this purpose the data on the relevant specification/data sheets shall be used.

EQUIPMENT LIST
ACCT. P - PUMPS

Client SERI **Signature**

Unit Acid Hydrolysis (Alt. Case) **Location** Unit 200

Item No.	Name	Capacity gpm	Δp psi	Motor h.p.	Mat'l.	P & I	Remarks *(WT. LBS.)
PP-216 A,S	Lime Slurry Liquor Pump	100	40	10	CS	5	Intermittent Operation (Batch)
PP-217 A,S	Sugar Stripper Pump	1550	50	60	CS	5	
PP-218 A,S	Aqueous Furfural Pump	800	55	40	Duriron	5	
PD-219 A,S	Sulphuric Acid Feed Pump	10	275	10	Duriron	6	Gear
PP-220 A,S	Lime Mixing Pump	250	25	10	Duriron	6	
PP-221 A,B,S	Lime Slurry Pump	150	35	10	Duriron	6	
PP-223 A,S	Gypsum Filter Wash Pump	60	20	5	CS	4	
PP-224	Sump Pump	250	35	15	CS	5	Intermittent Operation
PP-225 A/S	3rd Stage Lignin Underflow Pump	500	20	20	Duriron	3	
PP-226	Sugar Stripper Reboiler Pump	300	125	40	Duriron	5	
PP-227	Hydrolyzate Reheater Pump	150	15	2	Duriron	4	

*Including driver and baseplate

NOTE: Above data (except for Item No. and Name) shall not be used for design purposes. For this purpose the data on the relevant specification/data sheets shall be used.

EQUIPMENT LIST
ACCT. P - PUMPS

Client SERI **Signature**

Unit 2nd Stage Hydrolysis (Alternative Case) **Location** Unit 200

Item No.	Name	Capacity gpm	Δp psi	Motor h.p.	Mat'l.	P & I	Remarks *(WT. LBS.)
PD-250 A/S	2nd Stage Hydrolysis Feed Pump	420	634	500	Alloy 20	2A	By Worthington
PD-251 A/S	2nd Stage Acid Dosing Pump	0.1	275	0.25	Duriron	2A	Gear Type
PP-252 A/S	2nd Stage Lignin Slurry Pump	405	35	15	Duriron	2A	
PP-254 A/S	2nd Stage Lignin Wash Pump	330	35	15	CI	2A	
PP-255	2nd Stage Lignin Centrifuge Feed Pump	200	20	10	CI	2A	
PP-256	Dewatering Centrifuge Feed Pump	160	20	10	CI	2A	
PP-257	2nd Stage Slurry Pump	400	35	15	Duriron	3	

*Including driver and baseplate

NOTE: Above data (except for Item No. and Name) shall not be used for design purposes.
For this purpose the data on the relevant specification/data sheets shall be used.

BE-UE-2-3 (8/82)

EQUIPMENT LIST
ACCT. T - HEAT EXCHANGERS

Client SERI — Signature

Unit Acid Hydrolysis (Alt. Case) — Location Unit 200

Item No.	Name	Area ft^2	Tube Mat'l. D.P. psig D.T. °F	Shell Mat'l. D.P. psig D.T. °F	Type	P & I	Remarks *(WT. KIPS.)
TT-201	Primary Feedwater Preheater	16,000	304L 200/FV 420	CS 400 400	BEM	2	
TT-202	H.P. Flash Vapor Aftercooler	4,000	304L 200/FV 420	CS 400 350	BEM	2	
TT-203	Sugar Stripper Reboiler	8,500	304L 200 420	304L 40 400	CEN	5	Vertical Thermosyphon
TT-205	Aqueous Furfural Cooler	5,100	304L 200 320	CS 100 150	BEM	2	
TT-206	Hydrolysate Cooler	11,000	CS 120 275	CS 100 200	BEM	5	
TT-207	Acid Water Heater	2,500	304L 400 500	CS 1250 600	BEM	2	
TT-209	Slurry Cooler	11,000	304L 100 300	CS 400 300	BEM	3	
TT-210	Sugar Stripper Preheater	11,000	CS 100 250	CS 120 275	BEM	5	
TT-211	Secondary Feedwater Preheater	13,000	304L 25/FV 300	CS 400 300	BEM	2	
TT-212	L.P. Flash Vapor Aftercooler	3,000	304L 100 300	CS 100 150	BEM	2	
TT-213	Hydrolyzate Preheater	12,500	CS 100/FV 300	304L 25/FV 300	BEM	4	
TT-214	Overflow Cooler	7,400	CS 100 150	CS 100 150	BEM	4	
TT-215	Slurry Vessel Vent Condenser	100	CS 150 400	CS 100 150	BEM	2	

*Estimated erection weight. (Excluding insulation and attachments)

NOTE: Above data (except for Item No. and Name) shall not be used for design purposes. For this purpose the data on the relevant specification/data sheets shall be used.

EQUIPMENT LIST
ACCT. T - HEAT EXCHANGERS

Client SERI **Signature**

Unit 2nd Stage Hydrolysis (Alternative Case) **Location**

Item No.	Name	Area ft^2	Tube Mat'l. D.P. psig D.T. °F	Shell Mat'l. D.P. psig D.T. °F	Type	P & I	Remarks *(WT. KIPS.)
TT-251	2nd Stage Slurry Cooler	1750	304L 100 300	CS 400 300	BEM	2A	

*Estimated erection weight. (Excluding insulation and attachments)

NOTE: Above data (except for Item No. and Name) shall not be used for design purposes. For this purpose the data on the relevant specification/data sheets shall be used.

EQUIPMENT LIST

ACCT. G - Misc. Equip.

Client SERI Signature

Unit Acid Hydrolysis (Alt. Case) Location Unit 200

Item No.	Name	Mat'l.	P & I	Duty - Description - Remarks
CS-201 A,B,C	Chip Screen	CS	2	110,000 lb/hr, 1" raw wood chips; HP-20 Length 10'0" (approx.)
CG-202 A,B,C	Grinder	CS	2	110,000 lb/hr "through 20 mesh wood" grinds HP - 3,000 See C.E. Bauer quote.
CS-203 A,B,C	Wood Grinds Conveyor	CS	2	110,000 lb/hr wood grinds (thru 20 mesh) HP - 25 Height - 60'-0"
CA-204 A/B	High Pressure Feeder	316L	2	140,000 lb/hr wood grinds (thru 20 mesh) from atmos. press. to 150 psig; 30 HP See Ingersoll Rand quote.
CA-205 A,B	Wood Slurry Agitator	316L	2	HP-75 (approx); conical screen mixer; see Jayco Vrieco quote.
CA-207	Static Mixer	316L	2	790 gpm; (1.2% H_2SO_4 @ 350°F) Diam: 10"
CC-209 A/B	1st Stage Lignin Centrifuge	316L	3	1728 gpm See Dorr Oliver quote.
CC-210 A/B	2nd Stage Lignin Centrifuge	316L	3	1160 gpm; See Dorr Oliver quote
CA-212	1st Stage Lignin Centrifuge Feed Tank Agitator	304L	3	HP 3 Prop. type Diam 3'-0"
CA-213	Neutralization Tank Agitator	CS	3	HP-10 Propellor type Diam. = 5'-0"
CC-214 A/B	Lignin Dewatering Centrifuge	316L	3	500 GPM Feed; HP=200; Type: Screen Bowl (See Dorr Oliver quote)
CC-215	Primary Gypsum Hydroclone	Nylon	4	1650 GPM See Bauer & Dorr-Oliver Quotes

NOTE: Above data (except for Item No. and Name) shall not be used for design purposes. For this purpose the data on the relevant specification/data sheets shall be used.

EQUIPMENT LIST

ACCT. G - Misc. Equip.

Client SERI Signature

Unit Acid Hydrolysis (Alt. Case) Location Unit 200

Item No.	Name	Mat'l.	P & I	Duty - Description - Remarks
GC-216 A to G	Gypsum Washing Hydroclones	Nylon	4	190 GPM; Total of 7 See Bauer quote or Dorr quote
GA-217	Gypsum Filter Tank Agitator	304L	4	HP - 1; Diam = 24"
GA-219	Gypsum Hydroclone Feed Tank Agitator	CS	4	20 HP; Diam = 5'-0" Prop. type
GF-220	Gypsum Rotary Filter	CS	4	50,000 lb/hr feed slurry (30% solids). To wash and produce 70% solids cake; 20 ft^2 rotary filter; includes vacuum equipment

NOTE: Above data (except for Item No. and Name) shall not be used for design purposes. For this purpose the data on the relevant specification/data sheets shall be used.

EQUIPMENT LIST
ACCT. C - Misc. Equip.

Client SERI Signature

Unit Acid Hydrolysis (Alt. Case) Location Unit 200

Item No.	Name	Mat'l.	P & I	Duty - Description - Remarks
GS-223	Lime Unloading Conveyor	CS	6	Intermittent Operation 200,000 lb/hr pulverised lime 120 ft. high; 50 HP; Redler type
GA-224	Lime Mix Tank Agitator	304L	6	10 HP; propellor type
GS-225	Lime Solids Feeder	CS	6	20,000 lb/hr rotary feed valve
GS-226	Lime Mixing Conveyor	CS	6	20,000 lb/hr horizontal belt type conveyor weigh feeder
GC-227	Lime Dust Cyclone	CS	6	250 ASFM Air; 15 lb/hr solids
GA-228A/B	Lime Slurry Day Tank Agitator	304L	6	25 HP Propellor type
GY-229	Oversize Wood Grind Screen	CS	2	Vibrating screen Diam - 20'0"
GA-230	Gypsum Wash Tank Agitator	CS	4	5 HP; propellor type; Diam 4'-0", length 8'-0"
GS-231 A,B	Wood Grinds Belt Feeder	CS	2	3'-0"x10'-0" LG; 170,000 lb/hr wood @ 50% moisture
GC-232A/B	3rd Stage Lignin Centrifuge	316L	3	1160 GPM See Dorr Oliver quote
GA-233	2nd Stage Lignin Feed Tank Agitator	304L	3	HP = 3 Diam 3'-0" Prop type
GA-234	3rd Stage Lignin Feed Tank Agitator	304	3	HP = 3; Diam 3'-0"; Prop type

NOTE: Above data (except for Item No. and Name) shall not be used for design purposes. For this purpose the data on the relevant specification/data sheets shall be used.

BE-UE-2-5 (8/82)

EQUIPMENT LIST

ACCT.

Client SERI — Signature

Unit 2nd Stage Acid Hydrolysis (Alt. Case) — Location

Item No.	Name	Mat'l.	P & I	Duty - Description - Remarks
GA-250	2nd Stage Slurry Vessel Agitator	316L	2A	Prop. Type
GC-251 A/B	2nd Stage Primary Lignin Centrifuge	316L	2A	412 gpm See Dorr Oliver quotation
GC-252	2nd Stage Lignin Washing Centrifuge	316L	2A	650 gpm; see Dorr Oliver quotation.
GC-253	2nd Stage Lignin Dewatering Centrifuge	316L	2A	157 gpm
GS-254 A,B,C	2nd Stage Lignin Sludge Screw	304L	2A	Total sludge flow 130 gpm
GA-255	2nd Stage Centrifuge Feed Tank Agitator	304L	2A	2.5 HP Diam. 3'-0" Length 12' Prop. type
GA-257	Dilution Vessel Agitator	304L	3	HP - 3.0 Diam. 4'-0"
GA-258	Dewatering Centrifuge Feed Agitator	304L	2	HP - 3.0; Diam 3'-0"

NOTE: Above data (except for Item No. and Name) shall not be used for design purposes. For this purpose the data on the relevant specification/data sheets shall be used.

EQUIPMENT LIST
ACCT. M - VESSELS

Client SERI **Signature**

Unit Utilities (Alt. Case). **Location** Unit 800

Item No.	Name	Dia. ft. / Lth. ft.	H V	Design Press. psig	Design Temp. °F	Mat'l.	P & I	Remarks *(WT. KIPS.)
MT-801	Process Water Tank	50'-0" 40'-0"	V	Atm	200	CS	19	API
MS-802	Blowdown Flash Drum	3'-0" 10'-0"	V	50/FV	350	CS	20	
MS-803	Hydrazine Drum	250 gals	V	10	200	316L SS	20	
MS-804	Condensate Surge Drum	10'-0" 30'-0"	H	15	250	CS	20	
MF-805	Backwash Transfer Tank	22'-0" 4'-0"	V	Atm	Amb	CS	19	
MS-806	Plant Air Receiver	5'-0" 16'-0"	V	150	150	CS	23	
MS-807	Instrument Air Receiver	5'-0" 16'-0"	V	150	150	CS	23	

* Estimated erection weight. (Excluding insulation and attachments)

NOTE: Above data (except for Item No. and Name) shall not be used for design purposes. For this purpose the data on the relevant specification/data sheets shall be used.

EQUIPMENT LIST
ACCT. P - PUMPS

Client SERI — Signature

Unit Utilities (Alt. Case) — Location Unit 800

Item No.	Name	Capacity gpm	Δp psi	Motor h.p.	Mat'l.	P & I	Remarks *(WT. LBS.)
PP-802 A,S	Process Water Transfer Pumps	2400	31	75	DI	19	
PP-803 A,S	Process Water Circulating Pump	5000	60	250	DI	19	
PP-804 A,B	Backwash Feed Pumps	6000	21	125	DI	19	
PP-805 A,B	Backwash Transfer Pumps	50	21	1.5	DI	19	
PP-806 A,S	Blowdown Pump	50	25	3	DI	20	
PP-807 A,S	Hydrazine Transfer Pump	5	20	1	316SS	20	
PP-808 A,S	H.P. BFW Pump	1700	1250	2750	Chrome Steel	20	Multistage
PP-809 A,S	Deaerator Feed Pump	1700	20	40	DI	20	
PP-810 A,S	Turbine Condensate Pump	650	40	30	DI	21	
PC-811	Air Compressor	1000 SCFM	125	250	CS	23	Oil free recip with coolers and ancillaries
PP-812 A-H	Cooling Water Circ. Pumps	7500	60	350	CI	22	Motor drives qty. = 8
PP-813 A,B,S	Well Water Pumps	2000	25	50	DI	19	

*Including driver and baseplate

NOTE: Above data (except for Item No. and Name) shall not be used for design purposes. For this purpose the data on the relevant specification/data sheets shall be used.

EQUIPMENT LIST
ACCT. C

Client SERI — Signature

Unit Utilities (Alt. Case) — Location Unit 800

Item No.	Name	Mat'l.	P & I	Duty - Description - Remarks
GF-801	Sand Filter	CS	19	34'-0" dia. x 8'-0"; 18" sand, 18" anthracite
GU-803 A,B	Demineralizers		20	2 bed, skid mounted, 400 GPM capacity at 50 psig, 100 F, with intermediate degasifier, regeneration equipment, required tanks, pumps and auxiliaries and chemical storage for 14 days operation. Permutit or equal.
GU-804 A,S	Condensate Polisher	SS	20	Duplex bed; 1,400 GPM capacity
GU-805	Condensate Collection System		20	2,000 gal. tank with two 1,700 GPM, 70 ft. head pumps, CS, rubber lined.
GV-806	Deaerator	CS shell SS internals	20	30 psig/FV, 300 F, 1700 GPM capacity, 17,000 gals. storage. To reduce dissolved oxygen to 0.005 cc/l.
GU-807	Hydrazine Addition Unit	316L SS	20	150 gal. tank and two metering pumps, 0.1 to 5 GPH.
GU-808	Ammonia Addition Unit	Chrome Steel	20	150 gal. tank and two metering pumps, 0.1 to 5 GPH.
GU-809	Phosphate Addition Unit	316L SS	20	150 gal. tank with agitator and two metering pumps, 0.1 to 5 GPH.
GY-810	Instrument Air Dryer	CS	23	600 SCFM, dual tower, dessicant type, electric heater regeneration
GZ-811	Turbo Generator	-	21	20 mw See next sheet for details
GT-812	Cooling Tower	Internals vendor Std	22	60,000 GPM, inlet temp. 118 F, outlet 88 F, heat load 900 mm BTU air; New England temps: dry bulb 88F, wet bulb 74 F.

NOTE: Above data (except for Item No. and Name) shall not be used for design purposes. For this purpose the data on the relevant specification/data sheets shall be used.

EQUIPMENT LIST

ACCT. G

Client SERI — Signature

Unit Utilities (Alt. Case) — Location Unit 800

Item No.	Name	Mat'l.	P & I	Duty - Description - Remarks
GZ-811	Turbogenerator		21	
	Actual steam in: 900 psia; 825°F 278,838 lb/hr			
	steam out: 150 psig, 17,201 lb/hr			
	50 psig, 267,259 lb/Hr			
	Total electrical generation 20 mw			
	Supply 480V, 60 Hz, 3 pH			
	120/208V, 60 Hz, 3 pH (4 wire)			
	With turbine condenser: 6,500 ft^2, 38 mm BTU/hr CS/CS			
	and vacuum ejector set and controls.			

NOTE: Above data (except for Item No. and Name) shall not be used for design purposes. For this purpose the data on the relevant specification/data sheets shall be used.

EQUIPMENT LIST
ACCT. H

Client SERI — Signature

Unit Utilities (Alt. Case) — Location Unit 800

Item No.	Name	Mat'l.	P & I	Duty - Description - Remarks
HB-801 A/B	Steam Boilers		18	
	Steam rate (actual) (design) Pressure			246,020 lb/hr (each) 300,000 lb/hr (each) 900 psia
	Temp Feed water temp Absorbed heat (actual)			825°F 212°F 302 mm BTU/hr (each)
	(design) Efficiency Fuel Available:			362 mm BTU/hr (each) 85%
	Process liquids: Lignin/tar solids: Auxiliary start-up fuel:			24,031 lb/hr; LHV-8,500 BTU/lb 35,148 lb/hr; LHV=12,000 BTU/lb Diesel oil
	Each boiler to be able to take full solids flow. Use Flakt system for lignin and tar, common system for both boilers; Flakt system covers drying and particulates emmission control.			
HC-803	Common stack, concrete	270 ft.	high 12'-0" self supporting.	

NOTE: Above data (except for Item No. and Name) shall not be used for design purposes. For this purpose the data on the relevant specification/data sheets shall be used.

THIS DOCUMENT CONTAINS PROPRIETARY INFORMATION BELONGING TO BADGER ENGINEERS, INC. OR ITS AFFILIATED COMPANIES AND SHALL BE USED ONLY FOR THE PURPOSE FOR WHICH IT WAS SUPPLIED IT SHALL NOT BE COPIED, REPRODUCED OR OTHERWISE USED, NOR SHALL SUCH INFORMATION BE FURNISHED IN WHOLE OR IN PART TO OTHERS, EXCEPT IN ACCORDANCE WITH THE TERMS OF ANY AGREEMENT UNDER WHICH IT WAS SUPPLIED OR WITH THE PRIOR WRITTEN CONSENT OF BADGER ENGINEERS, INC. AND SHALL BE RETURNED UPON REQUEST

BADGER ENGINEERS, INC.

A Raytheon Company

CAMBRIDGE, MASS.

EQUIPMENT LIST

DESIGN CASE III

5 MM GAL/YR ACID BASED WOOD TO ETHANOL PLANT

FOR

SOLAR RESEARCH INSTITUTE

GOLDEN, COLORADO

BADGER JOB NO. E-0461

SERI S/C NO. 2X-3-03096-2

ISSUE	DATE	DESCRIPTION	CH'K'D	APP'D
E	6 AUG. 84	FOR FINAL REPORT DRAFT SW		

CERTIFIED

ENG _____ DATE _____

_____ DATE _____

CLIENT _____ DATE _____

BE-UE-3-1 (8/82)

SHEET 1 OF

SPE-0461-EL-5E

UNIT	DESCRIPTION
100	Wood Chip Handling
200	Acid Hydrolysis
300	Fermentation
400	Ethanol Purification
500	Furfural Purification
600	Offsite Tankage
700	Environmental
800	Utilities

EQUIPMENT PIECE COUNT*

EQUIPMENT ACCOUNT	ACTUAL	UNIQUE	EQUIVALENT	REMARKS
AS (Towers)	6	6		
MT	21	19		
MF	4	4		
MR	8	4		
MS/MB	39	36		
PP	169	75		
PB	7	4		
PC	4	3		
PE	2	2		
PD	13	6		
TT	35	34		
TP	2	2		
TY	8	6		
GA		16		
GF	12	10		
G (Balance)	68	41		
H	3	2		
JC	-	-		
Totals	419	270		
B (Bldg)	12	12		

BE-UE-3-2 (Rev. 3/83)

EQUIPMENT LIST
ACCT. "G"

Client SERI **Signature**

Unit Feedstock Handling **Location** Unit 100

Item No.	Name	Mat'l.	P & I	Duty - Description - Remarks
GE-101	Wood Bucket Conveyor	CS	1	To remove chips from washing pond at 100 tons per hour (400 cu. yd/hr.) Consider possibility of using radial stacker.
GS-102	Jet Belt Conveyor	CS	1	30 tons/hr chips (120 yd^3/hr) to process (package unit).
GF-103	Chip Pile Screen	CS	1	Vibrating screen with 6" apertures; dimensions 9' x 12' wide.
GM-104 A,S	Front End Loader	-	1	Caterpillar Type 936 CAT 7.3 yd^3 bucket - one F/E
GS-105	Magnetic Chip Cleaner	CS	1	5 kw Ding (Lexington, MA) to remove down to ½" nuts and bolts
GM-106 A	Yard Switching Engines	-	1	100 HP diesel
GY-107	Wood Chip Truck Unloader	-	1	100 HP, hydraulic oil oper.
GY-108	Wood Chip Truck Scale	-	1	In-ground mech. lever type
GY-109	Wood Chip Rail Car Scale	-	1	

NOTE: Above data (except for Item No. and Name) shall not be used for design purposes.
For this purpose the data on the relevant specification/data sheets shall be used.

EQUIPMENT LIST
ACCT. P - PUMPS

Client SERI — Signature

Unit Feedstock Handling — Location Unit 100

Item No.	Name	Capacity gpm	Δp psi	Motor h.p.	Mat'l.	P & I	Remarks *(WT. LBS.)
PP-101	Flume Pump	2000	5	10	CS	1	To wash chips and drain washing pit

*Including driver and baseplate

NOTE: Above data (except for Item No. and Name) shall not be used for design purposes.
For this purpose the data on the relevant specification/data sheets shall be used.

BE-UE-2-3 (8/82)

EQUIPMENT LIST
ACCT. A - TOWERS

Client SERI — Signature

Unit Acid Hydrolysis — Location Unit 200

Item No.	Name	Dia. ft. / Ht. ft.	No. Trays	Design: Press. psig.	Design: Temp. °F	Mat'l.	P & I	Remarks *(WT. KIPS.)
AS-210	Sugar Stripper	6' 0" / 40' 0"	20 Sieve	15 FV	275	CS	5	25' skirt
AS-201T	Lot Sieve Trays for AS-201		20			CS	5	

* Estimated erection weight. (Excluding insulation and attachments)

NOTE: Above data (except for Item No. and Name) shall not be used for design purposes. For this purpose the data on the relevant specification/data sheets shall be used.

EQUIPMENT LIST
ACCT. M - VESSELS

Client SERI — Signature

Unit Acid Hydrolysis — Location Unit 200

Item No.	Name	Dia. ft. / Lth. ft.	H V	Design Press. psig	Design Temp. °F	Mat'l.	P & I	Remarks *(WT. KIPS.)
MS-201 A	Slurry Vessel	1600 gal conical	V	150 FV	500	316L	2	Jayco/Vrieco Conical mixer ~~(see quotation)~~
MR-202 A,S	Hydrolysis Reactor	0'-6" 24'-0"	V	1200 FV	750	See remarks	2	Zirconium lined carbon steel
MS-203	High Pressure Flash Drum	6'-0" 12'-0"	V	200 FV	420	316L	2	With 7'-0" long 30° cone bottom
MS-204	Low Pressure Flash Drum	7'-0" 12'-0"	V	50 FV	310	316L	2	
MR-206	Neutralisation Reaction Tank	5'-0" 16'-0"	V	50 FV	250	CS	3	
MS-207	Gypsum Hydroclone Feed Tank	6'-0" 16'-0"	V	50 FV	250	CS	4	
MS-209	Aqueous Furfural Drum	5'-0" 12'-0"	H	50 FV	25	304L	5	
MS-210	1st Stage Wash Tank	3'-6" 12'-0"	V	50 FV	25	304L	3	
MS-211	2nd Stage Lignin Feed Tank	3'-6" 12'-0"	V	50 FV	200	304L	3	
MS-212	Lignin Sludge Tank	4'-0" 12'-0"	V	Atmos	200	304L	3	with agitator 60° cone bottom
MS-213	Gypsum Wash Tank Tank	3'-6" 12'-0"	V	50 FV	200	CS	4	
MS-214	Gypsum Filter Feed Tank	2'-6" 8'-0"	V	50 FV	200	Rubber lined CS	4	

*Estimated erection weight. (Excluding insulation and attachments)

NOTE: Above data (except for Item No. and Name) shall not be used for design purposes. For this purpose the data on the relevant specification/data sheets shall be used.

EQUIPMENT LIST
ACCT. M - VESSELS

Client SERI Signature

Unit Acid Hydrolysis Location Unit 200

Item No.	Name	Dia. ft. / Lth. ft.	H V	Design Press. psig	Design Temp. °F	Mat'l.	P & I	Remarks *(WT. KIPS.)
MB-126	Chip Feed Bin	9'-0" / 24'-0"	V	Atm.	100	CS	2	Activated Bottom Disch.
MB-217	Ground Wood Bin	12'-0" / 12'-0"	V	Atm.	250	CS	2	Activated bottom disch. ~~60° sloped btm.~~
MS-218	Lime Mix Tank	5'-0" / 8'-0"	V	25	200	CS	6	Flat top with agitator
MT-219 A,B	Lime Slurry Day Tanks	12'-0" / 12'-0"	V	Atm.	150	CS	6	API with top agitator
MB-220	Lime Storage Bin	15'-0" / 28'-0"	V	Atm.	150	CS	6	Storage silo with 21'-0" lg ~~60° cone base~~
MT-221	Sulfuric Acid Day Tank	9'-0" / 12'-0"	V	Atm.	150	CS	6	API
MT-222	Sugar Stripper Feed Tank	19'-0" / 20'-0"	V	Atm.	200	CS	5	API with 4'x2' DP sump and ~~internal~~ baffles on inlet and outlet
MT-223	Hydrolysis Process Water Tank	8'-6" / 9'-6"	V	Atm.	200	CS	6	API Epoxy lined
MF-224	Lime Unloading Pit	20'x30' x3'	-	Atm.		Conc.	6	Below ground
MS-225	2nd Stage Wash Tank	4'-0" / 12'-0"	V	25	250	304L	3	
MS-226	3rd Stage Lignin Feed Tank	4'-0" / 12'-0"	V	25	250	304L	3	
MS-227	Dewatering Centrifuge Feed Tank	4'-0" / 12'-0"	V	25	250	304L	3	

* Estimated erection weight. (Excluding insulation and attachments)

NOTE: Above data (except for Item No. and Name) shall not be used for design purposes. For this purpose the data on the relevant specification/data sheets shall be used.

EQUIPMENT LIST

ACCT. P - PUMPS

Client SERI — Signature

Unit Acid Hydrolysis — Location Unit 200

Item No.	Name	Capacity gpm	Δp psi	Motor h.p.	Mat'l.	P & I	Remarks *(WT. LBS.)
PD-201 A,S	Hydrolysis Feed Pump	350	860	300	Alloy 20	2	See Worthington quotation
PP-202 A,S	Feed Water Pump	220	340	75	CS	6	
PP-204 A,S	Lignin Slurry Pump	400	36	15	Duriron	2	
PP-207 A,S	Lignin Wash Pump	120	15	2.5	Duriron	3	
PP-208 A,S	Lignin Centrifuge Pump	100	20	5	Duriron	3	
PP-209 A,S	Alkaline Hydrolysate Pump	320	20	7.5	CD4 MCU	3	
PD-210 A,S	Acid Dosing Pump	0.05	20	0.05	Duriron	6	Gear Type
PP-211 A,S	Gypsum Hydroclone Feed Pump	330	50	15	CD4 MCU	4	
PP-212 A to G	Gypsum Hydroclone Pumps	40	30	2.5	CD4 MCU	4	7 total
PP-213 A,S	Gypsum Wash Pump	20	35	2	CS	4	
PP-214 A,S	Gypsum Filter Pump	20	20	1.5	CD4 MCU	4	
PP-215 A,S	Sugar Stripper Feed Pump	310	35	10	CS	5	

*Including driver and baseplate

NOTE: Above data (except for Item No. and Name) shall not be used for design purposes. For this purpose the data on the relevant specification/data sheets shall be used.

EQUIPMENT LIST
ACCT. P - PUMPS

Client SERI **Signature**

Unit Acid Hydrolysis **Location** Unit 200

Item No.	Name	Capacity gpm	Δp psi	Motor h.p.	Mat'l.	P & I	Remarks *(WT. LBS.)
PP-216 A,S	Lime Slurry Liquor Pump	20	40	2.5	CS	5	Intermittent Operation (Batch)
PP-217 A,S	Sugar Stripper Pump	310	50	15	CS	5	
PP-218 A,S	Aqueous Furfural Pump	160	55	10	Duriron	5	
PD-219 A,S	Sulphuric Acid Feed Pump	2	275	5	Duriron	6	Gear
PP-220 A,S	Lime Mixing Pump	50	25	2.5	Duriron	6	
PP-221 A,B,S	Lime Slurry Pump	30	35	2.5	Duriron	6	
PP-223 A,S	Gypsum Filter Wash Pump	12	20	1.5	CS	4	
PP-224	Sump Pump	50	35	3	CS	5	Intermittent Operation
PP-225	3rd Stage Lignin Underflow Pump	100	20	5	Duriron	3	25-30% lignin slurry
PP-226	Sugar Stripper Reboiler Pump	60	125	10	Duriron	5	
PP-227	Hydrolyzate Reheater Pump	30	15	1	Duriron	4	

*Including driver and baseplate

NOTE: Above data (except for Item No. and Name) shall not be used for design purposes. For this purpose the data on the relevant specification/data sheets shall be used.

EQUIPMENT LIST
ACCT. T - HEAT EXCHANGERS

Client SERI **Signature**

Unit Acid Hydrolysis **Location** Unit 200

Item No.	Name	Area ft^2	Tube Mat'l. D.P. psig D.T. °F	Shell Mat'l. D.P. psig D.T. °F	Type	P & I	Remarks *(WT. KIPS.)
TT-201	Primary Feedwater Preheater	3,200	304L 200/FV 420	CS 400 400	BEM	2	
TT-202	H.P. Flash Vapor Aftercooler	800	304L 200/FV 420	CS 400 350	BEM	2	
TT-203	Sugar Stripper Reboiler	1,700	304L 200 420	304L 40 400	CEN	5	Vertical Thermosyphon
TT-205	Aqueous Furfural Cooler	1,020	304L 200 320	CS 100 150	BEM	2	
TT-206	Hydrolysate Cooler	2,200	CS 120 275	CS 100 200	BEM	5	
TT-207	Acid Water Heater	500	304L 400 500	CS 1250 600	BEM	2	
TT-209	Slurry Cooler	2200	304L 100 300	CS 400 300	BEM	3	
TT-210	Sugar Stripper Preheater	2200	CS 100 250	CS 120 275	BEM	5	
TT-211	Secondary Feedwater Preheater	2600	304L 25/FV 300	CS 400 300	BEM	2	
TT-212	L.P. Flash Vapor Aftercooler	600	304L 100 300	CS 100 150	BEM	2	
TT-213	Hydrolyzate Reheater	2,500	304L 100/FV 300	CS 25/FV 300	BEM	4	
TT-214	Overflow Cooler	1,500	CS 100 150	CS 100 150	BEM	4	
TT-215	Slurry Vessel Vent Condenser	20	CS 150 400	CS 100 150	BEM	2	
*Consider use of plate type exchanger if cheaper.							

*Estimated erection weight. (Excluding insulation and attachments)

NOTE: Above data (except for Item No. and Name) shall not be used for design purposes. For this purpose the data on the relevant specification/data sheets shall be used.

EQUIPMENT LIST

ACCT. G - Misc. Equip.

Client SERI Signature

Unit Acid Hydrolysis Location Unit 200

Item No.	Name	Mat'l.	P & I	Duty - Description - Remarks
GS-201	Chip Screen	CS	2	70,000 lb/hr, 1" raw wood chips HP=20 Diam. 10'0" Length 10'0" (approx.)
GG-202	Grinder	CS	2	70,000 lb/hr "through 20 mesh wood" grinds HP = 2,000; See C.E. Bauer quote.
GS-203	Wood Grinds Conveyor	CS	2	70,000 lb/hr wood grinds (thru 20 mesh) HP = 25; Height - 60'-0"; diam. 3'0"
GA-204	High Pressure Feeder	316L	2	84,000 lb/hr wood grinds (thru 20 mesh) from atmos. press. to 150 psig; 20 HP; See Ingersoll Rand quote.
GA-205	Wood Slurry Agitator	316L	2	HP (approx) 50; conical screen mixer; see Jayco/Vrieco quote.
GA-207	Static Mixer	316L	2	200 gpm (1.2% H_2SO_4 @ 350°F) Diam: 6"
GC-209 A/B	Primary Lignin Centrifuge	316L	3	See Dorr-Oliver quote.
GC-210	Lignin Washing Centrifuge	316L	3	See Dorr-Oliver quote.
GS-211 A,B,C	Lignin Sludge Screws	304L	3	19000 lb/hr moist lignin sludge; HP-5; GPM 50 Length 100 feet (Allowance).
GA-212	Lignin Centrifuge Feed Tank Agitator	304L	3	HP 1; Prop. type Diam 2'-0"
GA-213	Neutralization Tank Agitator	CS	3	HP-2.5; Propellor type; Diam. = 3'-0"
GC-214	Lignin Centrifuge	316L	3	See Dorr-Oliver quotation.
GC-215	Primary Gypsum Hydroclone	Nylon	4	330 GPM See Bauer & Dorr-Oliver Quotes

NOTE: Above data (except for Item No. and Name) shall not be used for design purposes. For this purpose the data on the relevent specification/data sheets shall be used.

EQUIPMENT LIST

ACCT. G - Misc. Equip.

Client SERI — Signature

Unit Acid Hydrolysis — Location Unit 200

Item No.	Name	Mat'l.	P & I	Duty - Description - Remarks
GC-216 A to G	Gypsum Washing Hydroclones	Nylon	4	30 GPM Total of 7 See Bauer quote or Dorr quote
GA-217	Gypsum Filter Tank Agitator	304L	4	HP - 0.25; Diam = 1'6"
GA-219	Gypsum Hydroclone Feed Tank Agitator	CS	4	5 HP; Diam = 3'-0"; Prop. type
GF-220	Gypsum Rotary Filter	CS	4	10,000 lb/hr feed slurry (30% solids) to wash and produce 70% solids cake 5 ft^2 rotary filter; includes vacuum equipment
GA-222	Lignin Sludge Tank Agitator	316L	3	10 HP; helical or prop type; diam = 3'-0"
GC-232A/B	3rd Stage Lignin Centrifuge	316L	3	
GA-233	2nd Stage Lignin Feed Tank Agitator	304L	3	HP - 3; Diam 2'-0" Prop type
GA-234	3rd Stage Lignin Feed Tank Agitator	304L	3	HP-3 Diam 3'-0" Prop type

NOTE: Above data (except for Item No. and Name) shall not be used for design purposes. For this purpose the data on the relevant specification/data sheets shall be used.

EQUIPMENT LIST
ACCT. G - Misc. Equip.

Client SERI Signature

Unit Acid Hydrolysis Location Unit 200

Item No.	Name	Mat'l.	P & I	Duty - Description - Remarks
GS-223	Lime Unloading Conveyor	CS	6	Intermittent Operation 40,000 lb/hr pulverised lime 70 ft. high; 10 HP; Redler type
GA-224	Lime Mix Tank Agitator	304L	6	2.5 HP; propellor type
GS-225	Lime Solids Feeder	CS	6	4000 lb/hr rotary feed valve
GS-226	Lime Mixing Conveyor	CS	6	4000 lb/hr horizontal belt type conveyor (weigh feeder)
GC-227	Lime Dust Cyclone	CS	6	50 ACFM Air; 3 lb/hr solids
GA-228A/B	Lime Slurry Day Tank Agitator	304L	6	5 HP; Propellor type
GY-229	Oversize Wood Grind Screen	CS	2	Vibrating screen; Diam - 10'0"
GA-230	Gypsum Wash Tank Agitator	CS	4	1 HP; propellor type Diam 2'-6", length 5'-0"
GS-231 A	Wood Grinds Belt Feeder	CS	2	3'-0"x10'-0" LG 70,000 lb/hr wood @ 50% moisture

NOTE: Above data (except for Item No. and Name) shall not be used for design purposes. For this purpose the data on the relevant specification/data sheets shall be used.

EQUIPMENT LIST
ACCT. A - TOWERS

Client SERI **Signature**

Unit Fermentation **Location** Unit 300

Item No.	Name	Dia. ft. / Ht. ft.	No. Trays	Design Press. psig.	Design Temp. °F	Mat'l.	P & I	Remarks *(WT. KIPS.)
AS-301	Scrubber	3'-6" 23'-0"	Packed	1.5	110	CS	8	
		Packed height 16'-5" 1" Plastic Raschig Rings Packing volume 5.0 m^3						

* Estimated erection weight. (Excluding insulation and attachments)

NOTE: Above data (except for Item No. and Name) shall not be used for design purposes. For this purpose the data on the relevant specification/data sheets shall be used.

BE-UE-2-1 (8/82)

EQUIPMENT LIST
ACCT. M - VESSELS

Client SERI — Signature

Unit Fermentation — Location Unit 300

Item No.	Name	Dia. ft. / Lth. ft.	H V	Design Press. psig	Design Temp. °F	Mat'l.	P & I	Remarks *(WT. KIPS.)
MR-301	#1 Fermenter	12'-6" 45'-0"	V	1.5	105	CS	7	Internal Draft-tube (see sketch)
MR-302 A,B	#2 Fermenter	12'-6" 45'-0"	V	1.5	105	CS	7	Internal Draft-tube (see sketch)
MS-303	IMY Regeneration Tank	10'-0" 20'-0"	V	50	105	CS	8	With jacket (see sketch)
MS-304	Air Receiver	3'-6" 8'-0"	V	75	150	CS	7	(see sketch)
MS-305	PBM Tank	5'-0" 8'-0"	V	Atmos + H_2O full	150	CS	7	(see sketch)
MF-306	Blowdown Pit	50 m^3		Atmos + full H_2O		Conc	7	In-ground
MS-311	Resin Tank	2'-6" 2'-6"	V	Atmos + H_2O full	125	304L	9	
MS-312	Yeast Liquid Tank	1'-3" 1'-3"	V	Atmos + H_2O full	125	304L	9	
MS-313	Alginate Tank	1'-6" 1'-6"	V	Atmos + H_2O full	125	304L	9	With jacket designed to 35 psig +125°F (see sketch)
MS-314	CA Tank	3'-6" 4'-0"	V	Atmos + H_2O full	105	Epoxy Coated CS	9	
MF-315	IMY Storage Pit	20'x20' x6' deep	V			Conc	9	Inground

* Estimated erection weight. (Excluding insulation and attachments)

NOTE: Above data (except for Item No. and Name) shall not be used for design purposes. For this purpose the data on the relevant specification/data sheets shall be used.

BE-UE-2-2 (8/82)

EQUIPMENT LIST
ACCT. P - PUMPS

Client SERI **Signature**

Unit Fermentation **Location** Unit 300

Item No.	Name	Capacity gpm	Δp psi	Motor h.p.	Mat'l.	P & I	Remarks *(WT. LBS.)
PP-301 A/S	#1 Broth Recycle Pump	520	50	25	CI	7	
PP-302 A,S	#2 Broth Recycle Pump	440	50	20	CI	7	
PP-303 A,S	Broth Transfer Pump	180	35	7.5	CI	8	
PP-304 A,S	IMY Transfer Pump	180	35	7.5	CI	7	
PP-305 A,S	Chemical Feed Pump	70	50	5	CI	7	
PP-306 A,S	Scrubber Pump	50	35	5	CI	8	
PD-307 A,S	PBM Pump	1	50	0.5	PVC	7	Reciprocating
PC-308 A,S	Air Compressor	70 SCFM	50	15	CI	7	Oil Free Reciprocating
PB-309 A,S	Recycle Blower	170 SCFM	50	32	CI	8	Nash/root Blower
PP-311 A,S	Polymer Pump	2	25	0.5	304SS	9	
PP-312 A,S	Yeast Pump	2	25	0.5	304SS	9	
PD-313 A,S	Feed Pump	0.05	25	0.1	304SS	9	
PP-314 A,S	IMY Feed Pump	20	35	5	304SS	9	
PP-315 A,S	CA - Pump	0.5	35	0.5	304SS	9	

*Including driver and baseplate

NOTE: Above data (except for Item No. and Name) shall not be used for design purposes.
For this purpose the data on the relevant specification/data sheets shall be used.

EQUIPMENT LIST
ACCT. T - HEAT EXCHANGERS

Client SERI **Signature**

Unit Fermentation **Location** Unit 300

Item No.	Name	Area ft^2	Tube Mat'l. D.P. psig D.T. °F	Shell Mat'l. D.P. psig D.T. °F	Type	P & I	Remarks *(WT. KIPS.)
TY-302	#1 Broth Cooler	2000	Plate 304L	Frame 304L	Plate & Frame	7	NBR Gaskets
TY-303	#2 Broth Cooler	1300	Plate 304L	Frame 304L	Plate & Frame	7	NBR Gaskets
TP-304	Air Heater	1	CS	CS	Double Pipe	7	

*Estimated erection weight. (Excluding insulation and attachments)

NOTE: Above data (except for Item No. and Name) shall not be used for design purposes.
For this purpose the data on the relevant specification/data sheets shall be used.

BE-UE-2-4 (8/82)

EQUIPMENT LIST
ACCT. "G"

Client SERI — Signature

Unit Fermentation — Location Unit 300

Item No.	Name	Mat'l.	P & I	Duty - Description - Remarks
GF-301	Air Prefilter	PVA	7	Glass Wool Packed; 70 SCFM Design Pressure 50 psig
GF-302	Air Filter	PVA	7	Depth Filter; 70 SCFM Design pressure = 50 psig
GF-303 A	#1 Auto Strainer	304L SS	7	Rotary Brush Type; 520 GPM; Design Pressure 60 psig
GF-304 A	#2 Auto Strainer	304L SS	7	Rotary Brush Type; 440 GPM; Design Pressure 60 psig
GA-305	PBM Tank Agitator	CS	7	HP 1; Propellor type
GA-311	Line Mixer	304L SS	9	Mechanical in-line mixer 0.1 HP 0.1 GPM
GZ-312	Yeast Immobilising Unit	304L SS	9	Package Unit 0.1 GPM 10 HP JGC Cost Quote: $50,000
GY-313	Chiller Unit		9	16,000 BTU/hr 5 HP Brine circulation supply temp. 0°C Package unit
GA-314	Resin Tank Agitator	304L SS	9	0.1 HP; Propellor type
GA-315	Yeast Liquid Tank Agitator	304L SS	9	0.1 HP; Propellor type
GA-316	Alginate Tank	304L SS	9	0.1 HP; Propellor type
GA-317	CA Tank Agitator	304L SS	9	1 HP; Propellor type
GY-318	Emergency Chiller Unit		7	0.25 mm BTU/hr; Package unit; 50 HP
GL-319	Lab Equipment		-	For Fermentation unit see attached sheets.
Lab equipment same for 5 MM gal		as for 25 MM gal.		

NOTE: Above data (except for Item No. and Name) shall not be used for design purposes. For this purpose the data on the relevant specification/data sheets shall be used.

EQUIPMENT LIST
ACCT. A - TOWERS

Client SERI — Signature

Unit Ethanol Purification — Location Unit 400

Item No.	Name	Dia. ft. / Ht. ft.	No. Trays	Design: Press. psig.	Design: Temp. °F	Mat'l.	P & I	Remarks *(WT. KIPS.)
AS-401	Beer Column	5'-6" / 32'-0"	16 sieve	15 FV	300	CS	10	20 ft. skirt
AS-401T	Lot Sieve Trays for AS-401		16			CS	-	
AS-402	Rectification Column	4'-6" / 40'-0"	24 sieve	15 FV	300	CS	11	20 ft. skirt
AS-402T	Lot Sieve Trays for AS-402		24			CS	-	

* Estimated erection weight. (Excluding insulation and attachments)

NOTE: Above data (except for Item No. and Name) shall not be used for design purposes. For this purpose the data on the relevant specification/data sheets shall be used.

EQUIPMENT LIST
ACCT. M - VESSELS

Client SERI — Signature

Unit Ethanol Purification — Location Unit 400

Item No.	Name	Dia. ft. / Lth. ft.	H V	Design Press. psig	Design Temp. °F	Mat'l.	P & I	Remarks *(WT. KIPS.)
MS-401	Degasser Drum	3'-6" 12'-0"	V	15 FV	300	CS	10	
MS-402	Beer Column Reflux Drum	2'-0" 8'-0"	H	50 FV	250	CS	10	
MS-403	Fusel Oil Decanter	2'-0" 8'-0"	H	25 FV	150	CS	11	with baffle
MT-404	Molecular Sieve Feed Tank	12'-0" 12'-0"	V	Atm.	250	CS	11	API
MS-405	Rectification Column Reflux Drum	3'-6" 12'-0"	H	50 FV	250	CS	11	
MT-406	Dilute Beer Feed Tank	15'-0" 20'-0"	V	6"WG Atm.	200	CS	10	API type

*Estimated erection weight. (Excluding insulation and attachments)

NOTE: Above data (except for Item No. and Name) shall not be used for design purposes. For this purpose the data on the relevant specification/data sheets shall be used.

BE-UE-2-2 (8/82)

EQUIPMENT LIST
ACCT. P - PUMPS

Client SERI **Signature**

Unit Ethanol Purification **Location** Unit 400

Item No.	Name	Capacity gpm	Δp psi	Motor h.p.	Mat'l.	P & I	Remarks *(WT. LBS.)
PP-401 A,S	Beer Column Bottoms Pump	290	50	15	DI	10	
PC-402	Sugar Stripper Vapor Compressor	6400 ACFM	23	1000	CI	10	
PP-403 A,S	Beer Column Reflux Pump	50	60	5	DI	10	
PP-404 A,S	Wash Return Pump	6	60	2.5	DI	11	
PP-405 A,S	Fusel Oil Pump	1	40	0.25	DI	11	
PP-406 A,S	Molecular Sieve Feed Pump	15	114	10	DI	11	
PP-407 A,S	Rectification Column Bottoms Pump	25	40	2.5	DI	11	
PP-408 A,S	Rectification Column Reflux Pump	50	60	5.0	DI	11	
PP-409 A,S	Dilute Beer Feed Pump	290	50	15	DI	10	

*Including driver and baseplate

NOTE: Above data (except for Item No. and Name) shall not be used for design purposes. For this purpose the data on the relevant specification/data sheets shall be used.

EQUIPMENT LIST
ACCT. T · HEAT EXCHANGERS

Client SERI — Signature

Unit Ethanol Purification — Location Unit 400

Item No.	Name	Area ft^2	Tube Mat'l. D.P. psig D.T. °F	Shell Mat'l. D.P. psig D.T. °F	Type	P & I	Remarks *(WT. KIPS.)
TT-402	Degasser Drum Condenser	300	CS 100 300	CS 25/FV 300	BEM	10	
TT-403	Beer Column Reboilers	4,000	CS 25/FV 400	CS 100 350	CEN	10	Vertical Thermosyphon
TT-405	Beer Column Condenser	1200	CS 100 150	CS 15/FV 300	BEM	10	
TT-406	Beer Column Vent Condenser	1,400	CS 100 150	CS 15/FV 250	BEM	10	
TT-407	Fusel Oil Cooler	60	CS 25 250	CS 100 150	BEM	11	
TT-409	Rectification Column Reboiler	2000	CS 25/FV 350	CS 100 350	CEN	11	Vertical Thermosyphon
TT-410	Rectification Column Condenser	700	CS 100 150	CS 15/FV 300	BEM	11	
TT-411	Rectification Column Vent Condenser	1400	CS 100 150	CS 15/FV 250	BEM	11	
TT-412	Aqueous Furfural Cooler	1200	304L 40 400	CS 100 150	BEM	10	
TT-413	Feed Preheater	4000	304L 40 400	CS 100 400	BEM	100	

*Estimated erection weight. (Excluding insulation and attachments)

NOTE: Above data (except for Item No. and Name) shall not be used for design purposes. For this purpose the data on the relevant specification/data sheets shall be used.

EQUIPMENT LIST

ACCT.

Client SERI — Signature

Unit Ethanol Purification — Location Unit 400

Item No.	Name	Mat'l.	P & I	Duty - Description - Remarks
CZ-401	Molecular Sieve		11	Package Unit to produce 5.0 mm gal/yr dehydrated ethanol from 181 proof alcohol - see Kemp information

NOTE: Above data (except for Item No. and Name) shall not be used for design purposes. For this purpose the data on the relevant specification/data sheets shall be used.

BE-UE-2-5 (8/82)

BADGER ENGINEERS, INC.	ISSUE	DATE	SHEET 2 OF	SPE-0461-EL-5E

EQUIPMENT LIST
ACCT. A - TOWERS

Client SERI **Signature**

Unit Furfural Recovery **Location** Unit 500

Item No.	Name	Dia. ft. / Ht. ft.	No. Trays	Design Press. psig.	Design Temp. °F	Mat'l.	P & I	Remarks *(WT. KIPS.)
AS-501	Azeo Column	4'-0" / 45'-0"	25 sieve	15	300	304L	12	20' skirt
AS-501T	Lot Sieve Trays for AS-501		25			304L	12	
AS-502	Dehydration Column	2'-0" / 18'-0"	11 sieve	15	400	CS	12	10' skirt
AS-502T	Lot Sieve Trays for AS-502		11			CS	12	

* Estimated erection weight. (Excluding insulation and attachments)

NOTE: Above data (except for Item No. and Name) shall not be used for design purposes. For this purpose the data on the relevant specification/data sheets shall be used.

EQUIPMENT LIST
ACCT. M - VESSELS

Client SERI **Signature**

Unit Furfural Recovery **Location** Unit 500

Item No.	Name	Dia. ft. / Lth. ft.	H V	Design Press. psig	Design Temp. °F	Mat'l.	P & I	Remarks *(WT. KIPS.)
MS-501	Furfural Decanter	4'-0" 12'-0"	H	100	250	304L	12	With internal baffle
MS-502	Solvent Decanter	6'-0" 16'-0"	H	100	300	304L	12	With internal baffle

*Estimated erection weight. (Excluding insulation and attachments)

NOTE: Above data (except for Item No. and Name) shall not be used for design purposes. For this purpose the data on the relevant specification/data sheets shall be used.

EQUIPMENT LIST
ACCT. P - PUMPS

Client SERI **Signature**

Unit Furfural Recovery **Location** Unit 500

Item No.	Name	Capacity gpm	Δp psi	Motor h.p.	Mat'l.	P & I	Remarks *(WT. LBS.)
PP-501 A,S	Azeo Column Bottoms Pump	140	35	7.5	CI	12	
PP-502 A,S	Azeo Column Reflux Pump	25	60	5	CI	12	
PP-503 A,S	Dehydration Column Feed Pump	10	35	2.5	CI	12	
PP-504 A,S	Dehydration Column Bottoms Pump	6	35	1	CI	12	
PP-505 A,S	Solvent Pump	140	35	7.5	CI	12	
PP-506 A,S	Furfural Waste Water Pump	140	35	7.5	CI	12	

*Including driver and baseplate

NOTE: Above data (except for Item No. and Name) shall not be used for design purposes.
For this purpose the data on the relevant specification/data sheets shall be used.

EQUIPMENT LIST
ACCT. T - HEAT EXCHANGERS

Client SERI **Signature**

Unit Furfural Recovery **Location** Unit 500

Item No.	Name	Area ft^2	Tube Mat'l. D.P. psig D.T. °F	Shell Mat'l. D.P. psig D.T. °F	Type	P & I	Remarks *(WT. KIPS.)
TY-501	Azeo Column Preheater	5,000	304L SS / 100 / 300		Plate	12	Plate type
TY-502	Azeotrope Aftercooler	120	304L SS / 50 / 250		Plate	12	Plate type
TT-503	Azeo Column Condenser	800	304L SS / 50 / 300	CS / 100 / 150	BEM	12	
TT-504	Azeo Column Reboiler	2200	304L SS / 50 / 350	CS / 150 / 350	BEM	12	
TT-505	Dehydration Column Condenser	400	CS / 50 / 350	CS / 100 / 150	BEM	12	
TY-506	Dehydration Column Preheater	100	CS / 50 / 350	— / —	Plate	12	Plate type
TY-507	Furfural Product Cooler	25	CS / 50 / 350	— / —	Plate	12	Plate type
TT-508	Dehydration Column Reboiler	400	CS / 250 / 400	CS / 250 / 400	BEM	12	

*Estimated erection weight. (Excluding insulation and attachments)

NOTE: Above data (except for Item No. and Name) shall not be used for design purposes. For this purpose the data on the relevant specification/data sheets shall be used.

EQUIPMENT LIST
ACCT. M - VESSELS

Client SERI **Signature**

Unit Offsite Storage Tankage **Location** Unit 600

Item No.	Name	Dia. ft. / Lth. ft.	H V	Design Press. psig	Design Temp. °F	Mat'l.	P & I	Remarks *(WT. KIPS.)
MT-606	Azeo Stripper Surge Tank	15'-0" 16'-0"	V	6"WG Atm	200	CS	13	API Type
MT-604	Fermentation Feed Tank	21'-3" 16'-0"	V	6"WG Atm	250	CS	13	API Type Insulated
MT-601 A,B	Ethanol Product Tank	30'-0" 24'-0"	V	6"WG Atm	200	CS	13	API Type Floating Roof
MT-608	Slops Tank	21'-3" 16'-0"	V	6"WG Atm	220	CS	13	API Type Insulated & ~~steam traced~~
MT-607	Fire Water Tank	30'-0" 24'-0"	V	6"WG Atm	220	CS	13	API Insulated & ~~steam traced~~
MT-602 A,B	Furfural Product Tank	30'-0" 24'-0"	V	6"WG Atm	250	CS	13	API Type Floating Roof
MT-603	Sulphuric Acid Storage	15'-0" 16'-0"	V	6"WG Atm	200	CS	13	API Type
MT-605	Fusel Oil Storage	15'-0" 16'-0"	V	6"WG Atm	250	CS	13	API Type Floating Roof
MT-609	Diesel Fuel Tank	6'-0" 16'-0"	V	6"WG Atm	150	CS	13	API
MT-610	Gasoline Storage Tank	15'-0" 16'-0"	V	6"WG Atm	150	CS	13	API Type Floating Roof

* Estimated erection weight. (Excluding insulation and attachments)

NOTE: Above data (except for Item No. and Name) shall not be used for design purposes. For this purpose the data on the relevant specification/data sheets shall be used.

EQUIPMENT LIST
ACCT. P - PUMPS

Client SERI **Signature**

Unit Offsite Storage Tankage **Location** Unit 600

Item No.	Name	Capacity gpm	Δp psi	Motor h.p.	Mat'l.	P & I	Remarks *(WT. LBS.)
PP-606 A/S	Azeo Stripper Feed Pump	160	60	15	DI	13	
PP-604 A/S	Fermentation Feed Pump	310	70	20	DI	13	
PP-601 A,B,S	Ethanol Product Pump	105	30	5	CS	13	
PP-608 A,S	Slops Transfer Pump	20	40	2	CI	13	
PP-607 A,S	Fire Water Pump	120	100	15	CS	13	
PP-602 A,B,S	Furfural Export Pump	100	30	5	CS	13	
PP-603 A,S	Sulphuric Acid Transfer	20	40	2.5	CI	13	
PP-605 A,S	Fusel Oil Export Pump	20	30	2.0	CI	13	
PP-609 A,S	Diesel Fuel Pump	25	50	1.5	CS	13	
PP-610 A,S	Gasoline Blending Pump	6	30	1.0	CS	13	

*Including driver and baseplate

NOTE: Above data (except for Item No. and Name) shall not be used for design purposes. For this purpose the data on the relevant specification/data sheets shall be used.

EQUIPMENT LIST
ACCT. T - HEAT EXCHANGERS

Client SERI — Signature

Unit Offsite Storage Tankage — Location Unit 600

Item No.	Name	Area ft^2	Tube / Shell		Type	P & I	Remarks
			Tube: Mat'l. D.P. psig D.T. °F	Shell: Mat'l. D.P. psig D.T. °F			*(WT. KIPS.)
TY-604	Fermentation Feed Cooler	2,000	CS 100 250	CS 100 150		13	Plate type

*Estimated erection weight. (Excluding insulation and attachments)

NOTE: Above data (except for Item No. and Name) shall not be used for design purposes. For this purpose the data on the relevant specification/data sheets shall be used.

BE-UE-2-4 (8/82)

EQUIPMENT LIST

ACCT.

Client SERI — Signature

Unit Offsite Storage Tankage — Location Unit 600

Item No.	Name	Mat'l.	P & I	Duty - Description - Remarks
GF-604	Air Vent Filter	CS	13	Depth Filter, Glass Wool Cartridge Element, 70 SCFM P max -2"WG
GF-603	Dessicant Air Filter	CS	13	Silica gel dessicant max P 2"WG on vent air forms - 803 diameter 0.5" x length 2'

NOTE: Above data (except for Item No. and Name) shall not be used for design purposes. For this purpose the data on the relevant specification/data sheets shall be used.

BE-UE-2-5 (8/82)

EQUIPMENT LIST
ACCT. B - Buildings

Client SERI Signature

Unit Offsite Storage Tankage Location Unit 600

Item No.	Name	Mat'l.	P & I	Duty - Description - Remarks
B-1	Administration Building	Conc + Brick		
B-2	Maintenance Building	Corr siding on steel		
B-3	Warehouse Building	Corr siding on steel		40 ft W x 100 ft Lg x 30 ft H for drum and bag storage with winter space heating from steam pipes; 2 doors each end; small office; lunch room.
B-4	Control & Electrical Building	Conc Block		
B-5	Acid Hydrolysis Process Building	Corr siding on steel		
B-6	Fermentation Process Building	Corr siding on steel		
B-7	Fire Pump House	Corr siding on steel		
B-8	Truck Weigh Scale House	Wood		Heated by steam.
B-9	Boiler House	Corr siding on steel		Includes boilers, BFW treating, deaerators.
B-10	Gate House #1	Wood		
B-11	Gate House #2	Wood		
B-12	Well Water Pump House	Corr siding on steel		

NOTE: Above data (except for Item No. and Name) shall not be used for design purposes. For this purpose the data on the relevant specification/data sheets shall be used.

EQUIPMENT LIST
ACCT. M - VESSELS

Client SERI — Signature

Unit Environmental — Location Unit 700

Item No.	Name	Dia. ft. / Lth. ft.	H V	Design Press. psig	Design Temp. °F	Mat'l.	P & I	Remarks *(WT. KIPS.)
MS-701	Hotwell Decanter	6'-6" 20'-0"	11	15	200	304L	14	With internal baffle.
MT-702	Mixed Solvent Tank	21'-3" 16'-0"	V	6"WG Atm	200	CS	14	API floating roof.
MT-703	Equalization Tank	-					15	
MT-704	Anaerobic Reactor	-					15	
MS-705	Reactor Surge Drum	-					15	
MS-706	Offgas K.O. Pot	-					15	
MT-707	Biotreater	40'-0" 24'-0"	V	Open top	150	CS Epoxy lined	16	API Tank Open Top
MS-708	Filter Feed Tank	10'-0" 20'-0"	V	Atm	150	CS Epoxy lined	16	
MF-709	Filtrate Sump	3'x3' x4' dp	V	Atm	Amb	Conc	16	Below ground
MS-710	LP Vent K.O. Drum	2'-0" 6'-0"	V	15	150	CS	17	With wire mesh mist eliminator

* Estimated erection weight. (Excluding insulation and attachments)

NOTE: Above data (except for Item No. and Name) shall not be used for design purposes. For this purpose the data on the relevant specification/data sheets shall be used.

EQUIPMENT LIST
ACCT. P - PUMPS

Client SERI — Signature

Unit Environmental — Location Unit 700

Item No.	Name	Capacity gpm	Δp psi	Motor h.p.	Mat'l.	P & I	Remarks *(WT. LBS.)
PP-701 A,S	First Effect Pump	210	20	5	CD4 MCU	14	
PP-702 A,S	Second Effect Pump	120	30	5	CD4 MCU	14	
PP-703 A,S	Third Effect Pump	30	55	2	CD4 MCU	14	
PE-704	Evaporator Vacuum System	50 lb/hr Air	Suction Press 2.5 psia	-	304L	14	With condenser 20ft^2
PP-705 A,S	Evaporator Wastewater Pump	250	40	10	304L	14	
PP-706 A,S	Solvent Pump	1	35	0.25	DI	14	
PP-707 A,S	Mixed Solvent Pump	60	40	5	DI	14	
PP-708 A,S	Reactor Feed Pump	-	-	-	-	15	
PP-709	Reactor Recycle Pump	-	-	-	-	15	
PB-710	Offgas Blower	-	-	-	-	15	
PE-711	Equalization Tank Eductor	-	-	-	-	15	
PB-712 A/S	Aeration Blowers	168 SCFM		20	CI	16	
PP-713 A/S	Sludge Pumps	130	20	5	DI	16	
PD-714 A,S	Filter Feed Pumps	20	15	1	DI	16	
PP-715	Filtrate Sump Pump	10	30	1	DI	16	

*Including driver and baseplate

NOTE: Above data (except for Item No. and Name) shall not be used for design purposes. For this purpose the data on the relevant specification/data sheets shall be used.

EQUIPMENT LIST
ACCT. P - PUMPS

Client SERI — Signature

Unit Environmental — Location Unit 700

Item No.	Name	Capacity gpm	Δp psi	Motor h.p.	Mat'l.	P & I	Remarks *(WT. LBS.)
PP-716	Final Effluent Pumps	140	40	7.5	DI	16	
PB-717 A,S	L.P. Vent Blower	480 ACFM	5	7.5	CI	17	

*Including driver and baseplate

NOTE: Above data (except for Item No. and Name) shall not be used for design purposes. For this purpose the data on the relevant specification/data sheets shall be used.

EQUIPMENT LIST
ACCT. T - HEAT EXCHANGERS

Client SERI | Signature

Unit Environmental | Location Unit 700

Item No.	Name	Area ft^2	Tube Mat'l. D.P. psig D.T. °F	Shell Mat'l. D.P. psig D.T. °F	Type	P & I	Remarks *(WT. KIPS.)
TT-701	First Effect Heater	5,200	CS 50/FV 350	CS 100 350	BEM	14	
TT-702	Second Effect Heater	5,200	CS 50/FV 300	CS 25/FV 300	BEM	14	
TT-703	Third Effect Heater	5,200	304L 50/FV 250	304L 25/FV 250	BEM	14	
TT-704	Evaporator Condenser	5,600	304L 100 150	304L 100/FV 250	BEM	14	
TT-705	Stillage Cooler	2,000	304L 100 150	304L 50 250	BEM	14	
TP-706	Solvent Cooler	8	CS 100 150	CS 50 200	BEM	14	

*Estimated erection weight. (Excluding insulation and attachments)

NOTE: Above data (except for Item No. and Name) shall not be used for design purposes. For this purpose the data on the relevant specification/data sheets shall be used.

EQUIPMENT LIST
ACCT. "C" - Special

Client SERI Signature

Unit Environmental Location Unit 700

Item No.	Name	Mat'l.	P & I	Duty - Description - Remarks
CE-701	First Effect Evaporator	CS	14	5'-6" dia x 8'-6" high plus cone bottom 25 psig/FV, 300°F
CE-702	Second Effect Evaporator	CS	14	8'-0" dia x 12'-0" high plus cone bottom 25 psig/FV, 250°F
CE-703	Third Effect Evaporator	304L	14	10'-0" dia x 9'-0" high plus cone bottom 25 psig/FV, 250°F
CF-704	Rotary Filter	CS	14	400 lb/hr, 2 sq. ft.
CU-705	Reactor Feed Heater	-	15	
CQ-706	Offgas Burner	-	15	
CV-707	Biotreater Aerators	Poly-ethylene	16	40 Kenic S type static aerator tubes 6" diam. x 12' lg
CV-708	Secondary Clarifier	CS	16	50'-0" diam. center feed clarifier x 7'-0" sidewall with sludge rake and skimmer above grade, 0.5 HP motor
CV-709	Polymer Feed System	SS or plastic	16	Automated system for batch make-up, transfer to storage, & injection into process.
CV-710	Belt Filter Press	CS	16	Horizontal belt filter press 1 meter.
CA-711	Polymer Mixer	CS	16	In-line static mixer 1.5" ø
CA-712	Filter Feed Tank	CS	16	Side Mtd Impeller Type Agitator located on MS-708; HP-2.0
	Flame Arrestor			
	MT-704 A,B Packing License			

NOTE: Above data (except for Item No. and Name) shall not be used for design purposes. For this purpose the data on the relevant specification/data sheets shall be used.

EQUIPMENT LIST
ACCT. M - VESSELS

Client SERI Signature

Unit Utilities Location Unit 800

Item No.	Name	Dia. ft. / Lth. ft.	H V	Design Press. psig	Design Temp. °F	Mat'l.	P & I	Remarks *(WT. KIPS.)
MT-801	Process Water Tank	30'-0" 24'-0"	V	Atm	200	CS	19	API
MS-802	Blowdown Flash Drum	2'-0" 6'-0"	V	50/FV	350	CS	20	
MS-803	Hydrazine Drum	50 gals	V	10	200	316L SS	20	
MS-804	Condensate Surge Drum	7'-0" 20'-0"	H	15	250	CS	20	
MF-805	Backwash Transfer Tank	13'-0" 3'-0"	V	Atm	Amb	CS	19	
MS-806	Plant Air Receiver	3'-0" 9'-0"	V	150	150	CS	23	
MS-807	Instrument Air Receiver	3'-0" 9'-0"	V	150	150	CS	23	

*Estimated erection weight. (Excluding insulation and attachments)

NOTE: Above data (except for Item No. and Name) shall not be used for design purposes. For this purpose the data on the relevant specification/data sheets shall be used.

EQUIPMENT LIST
ACCT. P - PUMPS

Client SERI — Signature

Unit Utilities — Location Unit 800

Item No.	Name	Capacity gpm	Δp psi	Motor h.p.	Mat'l.	P & I	Remarks *(WT. LBS.)
PP-802 A,S	Process Water Transfer Pumps	480	31	15	DI	19	
PP-803 A,S	Process Water Circulating Pump	1000	60	50	DI	19	
PP-804 A	Backwash Feed Pumps	2400	21	35	DI	19	
PP-805 A	Backwash Transfer Pumps	20	21	1	DI	19	
PP-806 A,S	Blowdown Pump	10	25	1	DI	20	
PP-807	Hydrazine Transfer Pump	1	20	0.25	316SS	20	
PP-808 A,S	H.P. BFW Pump	340	1700	400	Chrome Steel	20	Multistage
PP-809 A,S	Deaerator Feed Pump	250	20	50	DI	20	
PP-810 A,S	Turbine Condensate Pump	130	40	10	DI	21	
PC-811	Air Compressor	200 SCFM	125	100	CS	23	Oil free recip with coolers and ancillaries
PP-812 A,B,S	Cooling Water Circ. Pumps	6000	60	250	CI	22	Motor drives qty. = 8
PP-813 A,B,S	Well Water Pumps	1000	25	20	DI	19	

*Including driver and baseplate

NOTE: Above data (except for Item No. and Name) shall not be used for design purposes. For this purpose the data on the relevant specification/data sheets shall be used.

EQUIPMENT LIST

ACCT. G

Client SERI Signature

Unit Utilities Location Unit 800

Item No.	Name	Mat'l.	P & I	Duty - Description - Remarks
GF-801	Sand Filter	CS	19	15'-6" dia. x 6'-0"; 12" sand, 12" anthracite
GU-803 A,B	Demineralizers		20	2 bed, skid mounted, 100 GPM capacity at 50 psig, 100 F, with intermediate degasifier, regeneration equipment, required tanks, pumps
				and auxiliaries and chemical storage for 14 days operation. Permutit or equal.
GU-804 A,S	Condensate Polisher	55	20	Duplex bed; 300 GPM capacity
GU-805	Condensate Collection System		20	500 gal. tank with two 350 GPM, 70 ft. head pumps, CS, rubber lined.
GV-806	Deaerator	CS shell SS internals	20	30 psig/FV, 300 F, 350 GPM capacity, 3,500 gals. storage. To reduce dissolved oxygen to 0.005 cc/l.
GU-807	Hydrazine Addition Unit	316L SS	20	30 gal. tank and two metering pumps, 0.02 to 1 GPH.
GU-808	Ammonia Addition Unit	Chrome Steel	20	30 gal. tank and two metering pumps, 0.02 to 1 GPH.
GU-809	Phosphate Addition Unit	316L SS	20	30 gal. tank with agitator and two metering pumps, 0.02 to 1 GPH.
GY-810	Instrument Air Dryer	CS	23	150 SCFM, dual tower, dessicant type, electric heater regeneration

NOTE Above data (except for Item No. and Name) shall not be used for design purposes. For this purpose the data on the relevant specification/data sheets shall be used.

BE-UE-2-5 (8 82)

EQUIPMENT LIST

ACCT. G

Client SERI — Signature

Unit Utilities — Location Unit 800

Item No.	Name	Mat'l.	P & I	Duty - Description - Remarks
GZ-811	Turbo Generator	-	21	8.9 mw
	Rated steam in:	1100 psia; 825°F		
	(actual)	104,422 lb/hr		
	(design)	120,000 lb/hr		
	steam out:	150 psig, 4,500 lb/hr		
		50 psig, 75,800 lb/hr		
	Total electrical generation 8.9 mw			
	Supply 480V, 60 Hz, 3 pH			
	120/208V, 60 Hz, 3 pH (4 wire)			
	With turbine condenser:	6,000 ft^2, 36 mm BTU/hr CS/CS		
	and vacuum ejector set and controls.			
GT-812	Cooling Tower	Internals vendor	22	12,000 GPM, inlet temp. 118 F, outlet 88 F, heat load 180 mm BTU air; New England temps:
		Std		dry bulb 88F, wet bulb 74 F.

NOTE: Above data (except for Item No. and Name) shall not be used for design purposes. For this purpose the data on the relevant specification/data sheets shall be used.

EQUIPMENT LIST

ACCT. H

Client SERI — Signature

Unit Utilities — Location Unit 800

Item No.	Name	Mat'l.	P & I	Duty - Description - Remarks
HB-801 A,B	Steam Boilers			18
	Steam rate: (actual)		71,500 lb/hr	
	(design)		80,000 lb/hr	
	Pressure:		1100 psia	
	Temp.		874°F	
	Feedwater temp.:		212°F	
	Total absorbed heat load:		110 mm BTU/hr	
	Efficiency:		85.0 percent	
	Total fuel available:			
	Process liquids:		12,600 lb/hr, LHV = 8096 BTU/lb	
	Process vent gas:		2200 SCF/hr, LHV = 544 BTU/SCF	
	Lignin/tar solids:		10,000 lb/hr	
	Auxiliary startup fuel: Diesel oil			
	Each boiler to be able to take full solids flow			
	Use Flakt system for lignin and tar common system for both boiler covers.			
	Drying			
	Burning			
HC-803	Particulate emission control			
	Common stack, concrete, 150 ft. high, 6'-0" ø			
	self supporting (allowance - to be confirmed)			

NOTE: Above data (except for Item No. and Name) shall not be used for design purposes. For this purpose the data on the relevant specification/data sheets shall be used.

ECONOMIC ASSESSMENT

Introduction

This section presents the economic analysis of the process for fuel ethanol manufacture from wood. The four design cases investigated are summarized in Table 2.1. Two ethanol selling prices are calculated for each design case using two different sets of economic assessment parameters: One set requested by SERI and one set normally used by Badger.

The section covers the following:

- Raw material, and byproduct price analysis.
- Discussion of the economic assessment parameters used in the calculations.
- Presentation of the estimated capital costs for the four design cases.
- Presentation of the operating costs for each of the four design cases.
- Presentation of the ethanol selling prices for each design case calculated using the two different sets of parameters.

- Summary tables for revenues and costs of sales for each design case using both sets of parameters.

- Sensitivity analyses showing ethanol price variation with feedstock cost, capital cost and furfural byproduct price for design cases I and II for both sets of parameters.

- Sensitivity analysis showing the effect of the major economic assessment parameters on the internal rate of return (IRR) for design case I.

Feedstock, Byproduct and Labor Costs

Wood Chip Price

A woodchip price of $42 per dry metric ton has been taken as the basis for economic calculations. This figure is based on a study commissioned by Burlington Electric Company, from discussions with two chip supply companies, and from published reports (References 14 to 29). The prices quoted have been converted into equivalent 1984 prices, assuming an average inflation rate of 7% per annum, and are listed in Table 5.1.

Table 5.1 Wood Feedstock Price Data

Source	Price Quoted $/Dry Metric Ton	Date of Quotation	Equivalent Mid-1984 Price
Burlington Electric	32	1980	42
Chip Broker No. 1	40*	Nov 1983	41
Chip Broker No. 2	37.5*	Nov 1983	39
Reference 13	44**	Apr 1984	44
Reference 16	40	May 1984	40
Reference 17	37.5	Nov 1982	41
Reference 28	30.5	Mar 1981	37.5

*Debarked

**Aspen Wood

The major components of the wood chip price are given in Table 5.2 (Reference 14):

Table 5.2 Components of wood Feedstock Price

Component	Approximate %
Harvest Equipment Fixed Costs	40
Harvest Labor	25
Stumpage	7
Transportation (Up to 50 Miles)	25
Miscellaneous Costs	3
	100

The experience of the Burlington Electric Company in gathering wood chips for their McNeil Generating Station suggests that in order to maintain a stable group of wood supply subcontractors, it is necessary to pay a price for wood chips FOB the plant gate such that the subcontractor not only recovers his cost but also makes a reasonable profit. A price of $42 per ton is believed to be one that, for 1984, will meet these criteria and ensure the stable supply of wood chips required to feed a 25 million gallon per year ethanol from wood facility (Design Case I).

Although the $42 per ton wood chip price has also been used for the 5 million gallon per year case in the economic analysis which follows, the cost of wood for such a facility could be lower since it is possible that the smaller wood supply requirements of the 5 million gallon per year case could be supplied from mill waste or other scrap wood source. Finding such a source of waste wood would improve the economics since the economics are sensitive to feedstock cost as shown in Table 5.10.

Alternatively, a reduced capacity plant could, with minor modifications, be fed from the residue of a local agricultural operation. These residues include sugar cane bagasse, corn stover, and corn cobs. A further source of feedstock which could be utilized might be cellulosic domestic refuse. Feedstock obtained under such local site-specific conditions would be expected to be available for $30 to $35 per dry metric ton on average.

The sensitivity of ethanol selling price to feedstock cost has been investigated for the 25 million and 5 million gallon plants. These results are reported later in this section.

Furfural Price

Byproduct furfural has been priced at 55¢ per pound for the short range market (0-5 years) and 15¢ per pound for the long range market (10-20 years). It is anticipated that in the early stages of introduction of this technology, i.e. demonstration and first generation commercial operation, that the quantities of furfural produced will not greatly affect the market price. For example, a first commercial size plant production 5 million gallons ethanol per year would produce 26 million pounds per year of furfural or around 13% of the existing U.S. market.

The present published market price of furfural is 66¢ per pound (Reference 20) and two or three such plants producing furfural at a selling price of 55¢ per pound would be expected to displace a portion of the current U.S. production (Reference 10). Domestic furfural production has been on the decline in recent years as a result of uneconomic production methods.

In the longer term (10 to 20 years), since furfural is an extremely versatile intermediate chemical, an increase in its use would be expected in response to lowering of its price. Existing commodity chemicals adipic acid, maleic anhydride, tetrahydrofuran, and butanol currently manufactured using petrochemical routes can be produced from furfural using known technology (Reference 9, 10, and 11). A quantitative analysis of the potential furfural market is given in Section 6.0.

Based on this analysis a furfural price of 15¢ per pound has been taken as the long term market price. At this price, the analysis predicts a market demand of 2.2 billion pounds per year (References 9 and 10). The sensitivity of the ethanol selling price to furfural price is calculated for the 25 million gallon plant.

Electricity Selling Price

The co-generated export electricity selling price has been taken as 5¢ per kilowatt hour for the purposes of the study. Electric power has a guaranteed market under the provisions of the PURPA Act (Reference 21) provided generating capacity does not exceed 80 MW. The price is negotiable and varies considerably from state to state. It is based on the "avoided cost" of electricity production by the local utility. Prices quoted range from 5¢ to 10¢ per kilowatt hour depending on local utility costs as well as credits available in some states for biomass derived energy (Reference 22 and 23). Generating capacity for the 25 million gallon scale plant is 44.5 MW.

Ethanol Denaturant

Gasoline used as ethanol denaturant is sold along with the ethanol as "denatured ethanol" (a blend of 5% by volume gasoline and 95% ethanol). A marginal benefit to the economics is gained by purchasing the gasoline (87 octane) at the wholesale prices of 85¢ per gallon and selling it at the calculated ethanol price. (This presumes, of course, that the calculated denatured ethanol price is above 85¢ per gallon.)

Fusel Oils

No revenue has been assumed for fusel oils from either direct sales or burning for power generation. In the process, fusel oil is exported.

Landfill

The cost of disposal of gypsum, ash and other separated salts is taken at a typical value of $5.5 per metric ton.

Other Raw Material Prices

The following sources have been used for other raw material prices:

Chemical Marketing Reporter
Oil & Gas Journal (Gasoline)
Badger In-house Prices (Celrobic)
Vendor Information (Molecular Sieve Packing)

Labor Rates

Operating labor rates are based on those published by the U.S. Department of Commerce, Bureau of Economic Analysis.

Assumptions Underlying the Economic Analysis

Badger has conducted an economic analysis of a conceptual acid hydrolysis based ethanol plant using two different sets of basic assumptions or parameters. One set is provided by SERI to give a common basis for comparing this analysis with others. The second set Badger normally uses in this type of study to avoid influencing the outcome with difficult to predict factors. The major differences between the two sets of parameters are discussed in the following pages and summarized in Table 5.3.

Table 5.3 Parameters for Parallel Economic Analysis

	SERI	BADGER
Capacity Factor (Hours/Year)	8000	8000
Inflation Rate (%)	7	Zero
Base Year for Dollars	1984	1984
Year of Cost Information	1984	1984
Construction Start Date	F/Q 1985	F/Q 1985
Investment Drawdown	Monthly (Straight Line)	Monthly (Straight Line)
First Commercial Operation	Mid-1987	Mid-1987
Operating Lifetime (Years)	15	15
Tax Depreciation Schedule	ACRS*	ACRS*
Taxes and Insurance (% of Investment)	2 Total	2 Total
Income Tax Rate (%)	45	45
Investment Tax Credit (%)	10	10
Energy Tax Credit (%)	Zero	10
Multiple or Single Venture Company (%)	Single	Multiple
Ratio of Debt to Capitalization (%)	30	Zero
Annual Rate of Return on Debt (%)	13	--
Annual Rate of Return on Equity (%)	15 (25)** (After Tax)	15 (After Tax)
Escalation Rate on Capital (%)	1	Zero
Escalation Rate on Operations (%)	1.5	Zero
Operating Capacity Schedule	100% After Startup	50% First 12 Months 80% 12-24 Months 100% Thereafter
Salvage Value	Zero	10% (Of Investment)

*ACRS - Accelerated Cost Recovery System allowed by law over 5 years. Yearly percent write-offs are: 15, 22, 21, 21, 21 (Reference 24).

**Ethanol selling price at 25% IRR as well as at 15% on Equity, is calculated using SERI parameters.

Discounted Cash Flow Internal Rate of Return (IRR)

A IRR of 15% on equity has been requested by SERI. This figure may well be acceptable to companies in the long term once the technology is proven and established. It has therefore been used in calculating an ethanol selling price for both the 25 and 5 million gallon plants. However, in the nearer term it is believed that this IRR may not be sufficient to encourage companies to utilize the fuel ethanol from wood technology. Consequently, the 5 million gallon plant economics calculated using SERI parameters have also been presented using a 25% IRR.

The base year for discounting cash flows in the IRR calculation is the start of construction year (1985).

Debt to Equity Ratio

The SERI based economic calculations are based on 30% leveraged debt, 70% equity participation. This represents a "special case" since normally economic analysis at this stage would be carried out using 100% equity financing. The parallel Badger analysis uses 100% equity.

In economic analyses involving leveraged debt capital, interest payable during the construction phase has been capitalized.

Investment Tax Credit

An investment tax credit of 10% of total investment has been used in both the SERI and Badger based analysis. Energy tax credits (10% of total investment) normally available to this type of project have not been included in the SERI based analysis, but have been assumed for the Badger analysis (Reference 29).

Removing 10% Energy Tax Credit has the effect of increasing the ethanol selling price by ¢ 15 per gallon to $1.95 for the base case plant.

Single Versus Multiple Venture Company

Whether or not the company operating the plant is a single or multiple venture company affects the economic calculations. For multiple venture companies, tax credits and operating loss tax write-offs can be taken as soon as they are available, but with single venture companies such write-offs must be deferred until they can be written-off against an operating profit in later years. The assumption of a single venture company is, of course, the more conservative since there is an economic benefit to being able to take early advantage of available tax allowances. In the SERI based analysis a single venture company has been assumed, and in the Badger analysis a multiple venture company has been assumed.

Operating Capacity Schedule

An operating capacity schedule of 100% of design immediately after startup has been specified by SERI. This seldom occurs in actual practice and, consequently, Badger normally uses a more conservative basis that assumes the plant will operate at 50% of design for the first 12 months, 80% of design capacity for the next year (months 12-24), and at 100% of design capacity thereafter.

Inflation and Escalation

SERI has requested that the economic analysis be based upon an overall inflation rate of 7% per year. In addition, an escalation rate of 1% on capital costs and 1.5% on operating costs has also been specified. This in effect gives an inflation rate on capital costs of 8% and operating costs of 8.5%. The effect of inflation is to raise the calculated IRR roughly in proportion to the yearly inflation rate. The effect of inflation rate has been calculated for the base case economics and is shown in Figure 5.10.

Working Capital

Working capital required has been estimated by the following method:

30 days accounts receivable
+Cash (10% accounts payable)
+15 days inventories
+30 days maintenance and spare parts
-30 days wages
-30 days raw materials
-30 days maintenance and labor
-90 days taxes

The effect of working capital on the IRR is shown in Figure 5.10.

Distribution Expenses

Distribution expenses are a site-specific item and depends on specific customer bases not included in the present calculation. Production costs have therefore been calculated FOB plant.

A full description of the complete Badger method of economic assessment is given in Appendix VI.

Capital Costs

Estimated capital costs for the four design cases have been prepared and ar presented in Table 5.4.

Table 5.4 Capital Costs of the Four Design Cases

	Design Case	Capital Cost $MM
I	25 Million Gallons (Base)	139.78
II	25 Million Gallons (Alternative)	134.88
III	5 Million Gallons	69.76
IV	5 Million Gallons (Purchased Power)	58.13

The estimates of capital cost in Table 5.4 have been developed as is described in Appendix VII.

The components of the capital cost for each design case is given below in Table 5.5.

Table 5.5 Components of Capital Cost for Each Design Case

Design Case	I (Base)	II (Alternative)	III (5 MM Gal)	IV (5 MM Gal Purchased Power)
Unit 100 (Feed Handling)	0.97	0.98	0.52	0.53
Unit 200 (Hydrolysis)	21.74	23.35	9.36	9.66
Unit 300 (Fermentation)	5.38	5.44	2.91	3.00
Unit 400 (Ethanol Purification)	9.22	9.31	4.09	4.22
Unit 500 (Furfural Recovery)	2.58	2.61	1.28	1.32
Unit 600 (Tankage)	6.36	6.43	3.83	3.95
Unit 700 (Environmental)	8.39	8.48	4.14	4.27
Unit 800 (Utilities)	48.76	42.70	22.87	13.25
Total (USGC)*	103.4	99.30	49.00	40.20
Overhead at 50% Plus G/A at 15% of Engineering Costs	5.82	5.94	4.06	4.02
Construction Taxes	1.77	1.70	0.80	0.66
Spare Parts	2.10	1.94	0.80	0.65
Startup Fees	1.00	1.00	0.70	0.70
Transfer Plant to Typical Mid-west Location	17.69	17.00	8.40	6.60
Contingency**	8.00(6%)	8.00	6.00 (10%)	5.30 (10%)
Total	139.80	134.90	69.80	58.10

*U.S. Gulf Coast estimate.
**See discussion on contingency in Section 6.0

The cost of land is included separately in the economic analysis and does not appear in the preceding figures.

The base case capital cost is $139.78 million. This is based on a U.S. Gulf Coast cost estimate of $103.4 million. The final capital cost of $139.8 million accounts for engineering overhead plus general and administrative costs, construction taxes, spares, startup fees, extra costs associated with a mid-west location and a contingency based on the estimating method which corrects the base estimate to the "most likely" figure.

The capital cost of the alternative design case for the large scale plant (two stage hydrolysis) is $134.88 million. The difference between this and the base case is due mainly to reduction in the boiler and turbogenerator capacity. As can be seen from the capital cost component analysis the two stage hydrolysis section, as expected, is slightly more expensive than in the base case.

The reduced capacity plant for 5 million gallon per year ethanol costs $69.76 million. This plant is designed on the same basis as for the base case 25 million gallon plant except that the hydrolysis unit in the smaller plant is single train.

The 5 million gallon scale plant with purchased electrical power costs $58.13 million. The reduction in cost of $8.8 million being due to elimination of the turbogenerator and slight reduction in the size of the boilers.

The above capital costs have been generated for a typical mid-west location. For further discussion of the geographical location see Section 2.0.

The two major components of capital cost are the hydrolysis unit (21%) and the utilities section (47%). The high capital cost of the hydrolysis section reflects what is believed to be a conservative design considering the present state of development of the process. (Further consideration of this aspect of technical risk is given in Section 6.0.)

By far the greatest component of capital cost is that of the plant utilities section. This is dominated by the cost of the boiler and turbogenerator. For this reason, quotations from a vendor for both these items were obtained and considerable effort was expended on defining these costs. However, it is believed that there may be significant cost savings to be made in this area.

The high capital cost of the boiler system is primarily due to the need to burn lignin, waste solvents and digester off-gas in the same unit. There is also the additional cost of the Flakt lignin drier in the boiler system.

The boiler cost is further increased by the specification of two parallel boilers each producing 60% of the total steam (70% of process needs) and each sized to burn all of the lignin/tar residue.

Economic analysis discussed later in this section show that it is cost effective to include a turbogenerator to generate power onsite, even for the reduced capacity plant. For the 25 million gallon plant onsite power generation has an even stronger justification.

Operating Costs

The following pages give the operating requirements and production figures for the four design cases. Costs are for base year 1984. The production rate of denatured ethanol (27.5 million gallons per year) is composed of the basic design production rate of fuel grade ethanol 26.2 million gallons per year in addition to 87 octane gasoline 1.3 million gallons per year (blended at 5% by volume) as a denaturant. Yearly revenues for a 15% IRR are given for both the SERI and the Badger calculations.

Design Case I
(Base Case)

Costs

Raw Materials

Item	Units	Usage Units/Yr	Cost $/Unit	Cost $/Yr
Wood Chips	Metric Tons	590,400	42	24,797,000
Sulfuric Acid	Metric Tons	18,155	65	1,180,000
Calcium Hydroxide	Metric Tons	18,383	35	643,000
Yeast and IMY Chemicals				136,000
Diesel	U.S. Gallons	10,000	1	10,000
Nitrogen				12,000
Boiler Water Chemicals				17,000
Molecular Sieve Packing				85,000
Cooling Water Chemicals				5,000
Anaerobic Digester Chemicals				355,000
Gasoline (Denaturant)	U.S. Gallons	1.31×10^6	0.85	1,114,000
TOTAL				28,354,000

Labor	Number	Cost $/Yr	
Operators	60	1,280,000	
Foreman	8	200,000	
Supervisors	2	60,000	
TOTAL		1,540,000	
Direct Overhead (40% of Labor)		616,000	
TOTAL LABOR			2,156,000
Maintenance	(4% of Total Investment)		5,592,000
General Overhead	(60% of Labor and Maintenance)		4,648,000
Royalties			250,000
Taxes and Insurance	(1% of Investment each)		2,796,000
Landfill Disposal	($5.5 per Tonne)		348,000
TOTAL OPERATING COST			44,144,000

Byproduct Credits	Units	Units/Year	$/Unit	
Furfural	Pounds	130.2 MM	0.15	19,530,000
Electricity	Megawatts	176,000	50	8,800,000
			TOTAL	28,330,000

Design Case II
(Alternate Case)

Costs

Raw Materials

Item	Units	Usage Units/Yr	Cost $/Unit	Cost $/Yr
Wood Chips	Metric Tons	528,000	42	22,176,000
Sulfuric Acid	Metric Tons	25,919	65	1,685,000
Calcium Hydroxide	Metric Tons	22,509	35	788,000
Yeast and IMY Chemicals				136,000
Diesel	U.S. Gallons	10,000	1	10,000
Nitrogen				14,000
Boiler Water Chemicals				11,000
Molecular Sieve Packing				85,000
Cooling Water Chemicals				5,000
Anaerobic Digester Chemicals				300,000
Gasoline (Denaturant)	U.S. Gallons	1.31×10^6	0.85	1,114,000
TOTAL				26,324,000

Labor	Number	Cost $/Yr	
Operators	60	1,280,000	
Foreman	8	200,000	
Supervisors	2	60,000	
TOTAL		1,540,000	
Direct Overhead (40% of Labor)		616,000	
TOTAL LABOR			2,156,000

Maintenance	(4% of Total Investment)	5,395,000
General Overhead	(60% of Labor and Maintenance)	4,531,000
Royalties		250,000
Taxes and Insurance	(1% of Investment each)	2,698,000
Landfill Disposal	($5.5 per Tonne)	350,000
TOTAL OPERATING COST		41,704,000

Byproduct Credits	Units	Units/Year	$/Unit	
Furfural	Pounds	93.16 MM	0.15	13,974,000
Electricity	Megawatts	-	50.	-
			TOTAL	13,974,000

Design Case III
(5 Million Gallon - Onsite Electricity Generation)

Costs

Raw Materials

Item	Units	Usage Units/Yr	Cost $/Unit	Cost $/Yr
Wood Chips	Metric Tons	118,080	42	4,959,000
Sulfuric Acid	Metric Tons	3,631	65	236,000
Calcium Hydroxide	Metric Tons	3,677	35	129,000
Yeast and IMY Chemicals				272,000
Diesel	U.S. Gallons	2,000	1	2,000
Nitrogen				2,000
Boiler Water Chemicals				3,000
Molecular Sieve Packing				17,000
Cooling Water Chemicals				1,000
Anaerobic Digester Chemicals				71,000
Gasoline (Denaturant)	U.S. Gallons	262,000	0.85	223,000
TOTAL				5,915,000

Labor	Number	Cost $/Yr	
Operators	40	853,000	
Foreman	8	200,000	
Supervisors	2	60,000	
TOTAL		1,113,000	
Direct Overhead (40% of Labor)		445,000	
TOTAL LABOR			1,558,000

Maintenance	(4% of Total Investment)	2,790,000
General Overhead	(60% of Labor and Maintenance)	2,609,000
Royalties		250,000
Taxes and Insurance	(1% of Investment each)	1,395,000
Landfill Disposal	($5.5 per Tonne)	70,000
TOTAL OPERATING COST		14,587,000

Byproduct Credits	Units	Units/Year	$/Unit	Credit
Furfural	Pounds	26.04 MM	0.55	14,322,000
Electricity	Megawatts	35,200	50.0	1,760,000
			TOTAL	16,082,000

Design Case IV
(Purchased Electricity)

Costs

Raw Materials

Item	Units	Usage Units/Yr	Cost $/Unit	Cost $/Yr
Wood Chips	Metric Tons	118,080	42	4,959,000
Sulfuric Acid	Metric Tons	3,631	65	236,000
Calcium Hydroxide	Metric Tons	3,677	35	129,000
Yeast and IMY Chemicals				272,000
Diesel	U.S. Gallons	2,000	1	2,000
Nitrogen				2,000
Boiler Water Chemicals				3,000
Molecular Sieve Packing				17,000
Cooling Water Chemicals				1,000
Anaerobic Digester Chemicals				71,000
Gasoline (Denaturant)	U.S. Gallons	262,000	0.85	223,000
TOTAL				5,915,000
Purchased Electricity	Megawatts	32,800		1,968,000

Labor

Labor	Number	Cost $/Yr	
Operators	40	853,000	
Foreman	8	200,000	
Supervisors	2	60,000	
TOTAL		1,113,000	
Direct Overhead (40% of Labor)		445,000	
TOTAL LABOR			1,558,000

Maintenance	(4% of Total Investment)	2,325,000
General Overhead	(60% of Labor and Maintenance)	2,330,000
Royalties		250,000
Taxes and Insurance	(1% of Investment each)	1,163,000
Landfill Disposal	($5.5 per Tonne)	70,000
TOTAL OPERATING COST		15,580,000

Byproduct Credits

Byproduct Credits	Units	Units/Year	$/Unit	
Furfural	Pounds	26.04 MM	0.55	14,322,000
Electricity	Megawatts	-	50	-
			TOTAL	14,322,000

Calculated Ethanol Selling Price

The calculated ethanol selling price for each design case using the SERI and the Badger economic parameters is shown in Table 5.6 below. (Details of the calculations are given in Appendix VI.)

Table 5.6 Selling Price of Denatured Ethanol for the Four Design Cases

		Ethanol Selling Price $ Per Gallon		
		S.E.R.I Parameters		Badger Parameters
	Design Case	15% IRR	25% IRR*	15% IRR
I	25 Million Gallon (Base)**	1.23		1.80
II	25 Million Gallon (Alternative)	1.65		2.23
III	5 Million Gallon***	1.42	2.15	2.83
IV	5 Million Gallon (Purchased Power)	1.63		2.85

*For rationale behind using 25% DCFIROR for 5 million gallon per year cases, see page 9, Section 5.

**Furfural priced at ¢ 15/lb.

***Furfural priced at ¢ 55/lb.

The calculated ethanol selling price using SERI supplied economic assessment parameters is $1.23 per gallon for the base case plant. This is the price required to give a 15% IRR (after tax). The plant capital cost is $139.78 million, furfural price is 15¢ per pound, electricity 5¢ per kwh and feedstock price is $42 per dry metric ton. The parallel calculation using Badger economic assessment parameters gives a selling price of $1.80 per gallon required to give a 15% IRR after tax under the same conditions of capital and feedstock cost and byproduct revenues.

Alternative case (Design Case II) at a capital cost of $134.88 million gives an ethanol selling price of $1.65 (SERI) and $2.23 (Badger).

The reduced capacity 5 million gallon plant (Design Case III) at a capital cost of $69.78 million requires a selling price of $1.42 per gallon of ethanol to give a 15% IRR and a selling price of $2.15 per gallon to give a 25% IRR (both figures based on SERI calculation). The parallel Badger calculation shows a required selling price of $2.83 per gallon to give a 15% IRR.

For Design Case IV (5 million gallon plant with purchased electric power) at a capital cost of $58.13 million the required ethanol selling price to give a 15% IRR is $1.63 using the SERI parameters and $2.85 with Badger parameters.

Inspection of Table 5.6 shows that Design Case I (single stage hydrolysis) is more attractive than Design Case II (two stage hydrolysis reaction) despite the fact that Design Case II has a lower capital cost and higher ethanol yield on wood. This is due to increased revenues, in Design Case I, from furfural and exported electricity.

For the 5 million gallon scale plant using SERI parameters it is clearly cost effective to generate electric power onsite rather than to purchase it. Onsite generation gives a price advantage of 22¢ per gallon for the SERI calculation. For the Badger calculation, the decision is not so clear, a marginal advantage 2¢ being gained by onsite generation.

There is a considerable difference between the selling price based on the SERI economic parameters and that based on the Badger parameters. This is primarily due to removing the effects of inflation, and leveraged debt capital and lowering the operating capacity schedule. This indicates that at the present state of the technology a "specially" leveraged financing arrangement such as that specified in the SERI parameters would almost certainly be necessary for the first commercial plants.

There is also a considerable difference between the assumption of 15% IRR and 25% IRR. This suggests that to encourage initial introduction of the technology on the commercial scale a subsidy of some type will be required. On the longer term, once the technology is established, it should be possible to reduce or eliminate these subsidies.

Summary of Annual Revenues and Costs

Based on the foregoing operating requirements and production figures, yearly costs and revenues have been calculated for the plant operation for each design case.

Two sets of figures are given: one based on 100% capacity factor (SERI), and the other based on the capacity factor schedule assumed in the Badger calculation.

The price shown for ethanol in each case is that calculated to give a 15% IRR after tax. A summary of the calculated prices is given on page 22 of this section.

Annual Revenues and Cost of Sales (SERI)

Design Case I

SERI E-0461

BADGER

Date: 20-Sep-

ANALYSIS OF REVENUES

Year Start:	Jan-84	Jan-85	Jan-86	Jan-87	Jan-88	Jan-89	Jan-90	Jan-91	Jan-92	Jan-93	Jan-94	Jan-95	Jan-96	Jan-97	Jan-98	Jan-99	Jan-2000	Jan-2001	Jan-2002
Year No. :	-1	0	1	2	3	4	5	6	7	8	9	10	11	12	13	14	15	16	17
Plant availability	0%	0%	0%	50%	100%	100%	100%	100%	100%	100%	100%	100%	100%	100%	100%	100%	100%	100%	50%
Stream factor	0%	0%	0%	100%	100%	100%	100%	100%	100%	100%	100%	100%	100%	100%	100%	100%	100%	100%	100%
Inflation + Escalation, effect on operating costs:	1.00	1.09	1.18	1.28	1.39	1.50	1.63	1.77	1.92	2.08	2.26	2.45	2.66	2.89	3.13	3.40	3.69	4.00	4.34
PRODUCT VOLUMES	**Unit**																		
Ethanol	MMGals	0.00	0.00	0.00	13.75	27.50	27.50	27.50	27.50	27.50	27.50	27.50	27.50	27.50	27.50	27.50	27.50	27.50	13.75
Furfural	MMLbs	0.00	0.00	0.00	65.10	130.20	130.20	130.20	130.20	130.20	130.20	130.20	130.20	130.20	130.20	130.20	130.20	130.20	65.10
Electricity	MMkWh	0	0	0	88000	176000	176000	176000	176000	176000	176000	176000	176000	176000	176000	176000	176000	176000	88000
Landfill	metr tons	0	0	0	31667	63333	63333	63333	63333	63333	63333	63333	63333	63333	63333	63333	63333	63333	31667
SELLING PRICES	**$/.....**																		
Ethanol	MMGals	1.23	1.33	1.45	1.57	1.70	1.85	2.01	2.18	2.36	2.56	2.78	3.02	3.27	3.55	3.85	4.18	4.54	4.92	5.34
Furfural	MMLbs	0.15	0.16	0.18	0.19	0.21	0.23	0.26	0.27	0.29	0.31	0.34	0.37	0.40	0.43	0.47	0.51	0.55	0.60	0.65
Electricity	MMkWh	50.00	54.25	58.86	63.86	69.29	75.18	81.57	88.51	96.03	104.19	113.05	122.66	133.08	144.40	156.67	169.99	184.44	200.11	217.12
Landfill	metr tons	-5.50	-5.97	-6.47	-7.03	-7.62	-8.27	-8.97	-9.74	-10.56	-11.46	-12.44	-13.49	-14.64	-15.88	-17.23	-18.70	-20.29	-22.01	-23.88
REVENUES	**MM$**																			
Ethanol		0.0	0.0	0.0	21.6	46.9	50.9	55.2	59.9	65.0	70.5	76.5	83.0	90.0	97.7	106.0	115.0	124.8	135.4	73.4
Furfural		0.0	0.0	0.0	12.5	27.1	29.4	31.9	34.6	37.5	40.7	44.2	47.9	52.0	56.4	61.2	66.4	72.0	78.2	42.4
Electricity		0.0	0.0	0.0	5.6	12.2	13.2	14.4	15.6	16.9	18.3	19.9	21.6	23.4	25.4	27.6	29.9	32.5	35.2	19.1
Landfill		0.0	0.0	0.0	-0.2	-0.5	-0.5	-0.6	-0.6	-0.7	-0.7	-0.8	-0.9	-0.9	-1.0	-1.1	-1.2	-1.3	-1.4	-0.8
	MMS	0.0	0.0	0.0	39.5	85.7	92.9	100.8	109.4	118.7	128.8	139.7	151.6	164.5	178.5	193.7	210.1	228.0	247.4	134.2

SERI E-0461

BADGER

Date: 20-Sep-84

ANALYSIS OF COSTS OF SALES

Year Start:			Jan-84	Jan-85	Jan-86	Jan-87	Jan-88	Jan-89	Jan-90	Jan-91	Jan-92	Jan-93	Jan-94	Jan-95	Jan-96	Jan-97	Jan-98	Jan-99	Jan-2000	Jan-2001	Jan-2002
Year No. :			-1	0	1	2	3	4	5	6	7	8	9	10	11	12	13	14	15	16	17
Plant availibility			0%	0%	0%	50%	100%	100%	100%	100%	100%	100%	100%	100%	100%	100%	100%	100%	100%	100%	50%
Stream factor			0%	0%	0%	100%	100%	100%	100%	100%	100%	100%	100%	100%	100%	100%	100%	100%	100%	100%	100%
Inflation + Escalation, effect on operating costs:			1.00	1.09	1.18	1.28	1.39	1.50	1.63	1.77	1.92	2.08	2.26	2.45	2.66	2.89	3.13	3.40	3.69	4.00	4.34
RAW MATERIALS QUANTITIES																					
wood chips	metr tons		0	0	0	295200	590400	590400	590400	590400	590400	590400	590400	590400	590400	590400	590400	590400	590400	590400	295200
sulfuric acid	metr tons		0	0	0	9078	18155	18155	18155	18155	18155	18155	18155	18155	18155	18155	18155	18155	18155	18155	9078
lime	metr tons		0	0	0	9192	18383	18383	18383	18383	18383	18383	18383	18383	18383	18383	18383	18383	18383	18383	9192
other cats & chems			0.00	0.00	0.00	0.50	1.00	1.00	1.00	1.00	1.00	1.00	1.00	1.00	1.00	1.00	1.00	1.00	1.00	1.00	0.50
diesel oil	Gals		0	0	0	5000	10000	10000	10000	10000	10000	10000	10000	10000	10000	10000	10000	10000	10000	10000	5000
gasoline	MMgals		0.00	0.00	0.00	0.66	1.31	1.31	1.31	1.31	1.31	1.31	1.31	1.31	1.31	1.31	1.31	1.31	1.31	1.31	0.66
UNIT COSTS	$.....																				
wood chips	metr tons		42.00	45.57	49.44	53.65	58.21	63.15	68.52	74.35	80.67	87.52	94.96	103.03	111.79	121.29	131.60	142.79	154.93	168.10	182.38
sulfuric acid	metr tons		65.00	70.53	76.52	83.02	90.08	97.74	106.05	115.06	124.84	135.45	146.96	159.46	173.01	187.72	203.67	220.98	239.77	260.15	282.26
lime	metr tons		35.00	37.98	41.20	44.71	48.51	52.63	57.10	61.95	67.22	72.93	79.13	85.86	93.16	101.08	109.67	118.99	129.11	140.08	151.99
other cats & chems	/Yr		609800	661633	717872	778891	845097	916930	994869	1079433	1171185	1270735	1378748	1495941	1623096	1761059	1910750	2073163	2249382	2440580	2648029
diesel oil	Gallon		1.00	1.09	1.18	1.28	1.39	1.50	1.63	1.77	1.92	2.08	2.26	2.45	2.66	2.89	3.13	3.40	3.69	4.00	4.34
gasoline	Gallon		0.85	0.92	1.00	1.09	1.18	1.28	1.39	1.50	1.63	1.77	1.92	2.09	2.26	2.45	2.66	2.89	3.14	3.40	3.69
TOTALS	MM$																				
wood chips			0.0	0.0	0.0	15.8	34.4	37.3	40.5	43.9	47.6	51.7	56.1	60.8	66.0	71.6	77.7	84.3	91.5	99.2	53.8
sulfuric acid			0.0	0.0	0.0	0.8	1.6	1.8	1.9	2.1	2.3	2.5	2.7	2.9	3.1	3.4	3.7	4.0	4.4	4.7	2.6
lime			0.0	0.0	0.0	0.4	0.9	1.0	1.0	1.1	1.2	1.3	1.5	1.6	1.7	1.9	2.0	2.2	2.4	2.6	1.4
other cats & chems			0.0	0.0	0.0	0.4	0.8	0.9	1.0	1.1	1.2	1.3	1.4	1.5	1.6	1.8	1.9	2.1	2.2	2.4	1.3
diesel oil			0.0	0.0	0.0	.0	.0	.0	.0	.0	.0	.0	.0	.0	.0	.0	.0	.0	.0	.0	.0
gasoline			0.0	0.0	0.0	0.7	1.5	1.7	1.8	2.0	2.1	2.3	2.5	2.7	3.0	3.2	3.5	3.8	4.1	4.5	2.4
TOTAL VARIABLE COSTS			0.0	0.0	0.0	18.1	39.3	42.6	46.3	50.2	54.5	59.1	64.1	69.6	75.5	81.9	88.8	96.4	104.6	113.5	61.6
FIXED COSTS	Units, unit rates		MM$																		
labor	MM$/yr	1.48	0.00	0.00	0.00	0.95	2.05	2.23	2.41	2.62	2.84	3.08	3.35	3.63	3.94	4.27	4.64	5.03	5.46	5.92	3.21
supervision	MM$/yr	0.06	0.00	0.00	0.00	0.04	0.08	0.09	0.10	0.11	0.12	0.13	0.14	0.15	0.16	0.17	0.19	0.20	0.22	0.24	0.13
		subt 1	0.00	0.00	0.00	0.98	2.13	2.32	2.51	2.73	2.96	3.21	3.48	3.78	4.10	4.45	4.83	5.24	5.68	6.16	3.34
direct overhead	% subt 1	40	0.00	0.00	0.00	0.39	0.85	0.93	1.00	1.09	1.18	1.28	1.39	1.51	1.64	1.78	1.93	2.09	2.27	2.47	1.34
maintenance	% capital	4	0.00	0.00	0.00	3.57	7.75	8.41	9.12	9.93	10.74	11.65	12.64	13.72	14.88	16.15	17.52	19.01	20.62	22.38	12.14
insur & taxes	% capital	2	0.00	0.00	0.00	1.79	3.87	4.20	4.56	4.95	5.37	5.83	6.32	6.86	7.44	8.07	8.76	9.50	10.31	11.19	6.07
royalty	$/yr	250000	0.00	0.00	0.00	0.16	0.35	0.38	0.41	0.44	0.48	0.52	0.57	0.61	0.67	0.72	0.78	0.85	0.92	1.00	0.54
depreciation, (book)			0.00	0.00	0.00	5.62	11.23	11.23	11.23	11.23	11.23	11.23	11.23	11.23	11.23	11.23	11.23	11.23	11.23	11.23	5.62
TOTAL FIXE COSTS			0.00	0.00	0.00	12.51	26.19	27.46	28.84	30.34	31.96	33.73	35.64	37.71	39.96	42.40	45.05	47.93	51.05	54.43	29.05
TOTAL COSTS OF SALES			0.00	0.00	0.00	30.62	65.49	70.10	75.10	80.53	86.42	92.81	99.74	107.27	115.43	124.29	133.90	144.32	155.63	167.91	90.61

Design Case II

SERI E-0461

BADGER

Date: 20-Sep-84

ANALYSIS OF REVENUES

Year Start:	Jan-84	Jan-85	Jan-86	Jan-87	Jan-88	Jan-89	Jan-90	Jan-91	Jan-92	Jan-93	Jan-94	Jan-95	Jan-96	Jan-97	Jan-98	Jan-99	Jan-2000	Jan-2001	Jan-2002
Year No. :	-1	0	1	2	3	4	5	6	7	8	9	10	11	12	13	14	15	16	17
Plant availability	0%	0%	0%	50%	100%	100%	100%	100%	100%	100%	100%	100%	100%	100%	100%	100%	100%	100%	50%
Stream factor	0%	0%	0%	100%	100%	100%	100%	100%	100%	100%	100%	100%	100%	100%	100%	100%	100%	100%	100%
Inflation + Escalation, effect on operating costs:	1.00	1.09	1.18	1.28	1.39	1.50	1.63	1.77	1.92	2.08	2.26	2.45	2.66	2.89	3.13	3.40	3.69	4.00	4.34
PRODUCT VOLUMES Unit																			
Ethanol MMGals	0.00	0.00	0.00	13.75	27.50	27.50	27.50	27.50	27.50	27.50	27.50	27.50	27.50	27.50	27.50	27.50	27.50	27.50	13.75
Furfural MMLbs	0.00	0.00	0.00	46.57	93.14	93.14	93.14	93.14	93.14	93.14	93.14	93.14	93.14	93.14	93.14	93.14	93.14	93.14	46.57
Electricity MWHrs	0	0	0	0	0	0	0	0	0	0	0	0	0	0	0	0	0	0	0
Landfill metr Tons	0	0	0	31667	63333	63333	63333	63333	63333	63333	63333	63333	63333	63333	63333	63333	63333	63333	31667
SELLING PRICES $/....																			
Ethanol MMGals	1.65	1.79	1.94	2.11	2.29	2.48	2.69	2.92	3.17	3.44	3.73	4.05	4.39	4.77	5.17	5.61	6.09	6.60	7.17
Furfural MMLbs	0.15	0.16	0.18	0.19	0.21	0.23	0.24	0.27	0.29	0.31	0.34	0.37	0.40	0.43	0.47	0.51	0.55	0.60	0.65
Electricity MWHrs	50.00	54.25	58.86	63.86	69.29	75.18	81.57	88.51	96.03	104.19	113.05	122.66	133.08	144.40	156.67	169.99	184.44	200.11	217.12
Landfill metr Tons	-5.50	-5.97	-6.47	-7.03	-7.62	-8.27	-8.97	-9.74	-10.56	-11.46	-12.44	-13.49	-14.64	-15.88	-17.23	-18.70	-20.29	-22.01	-23.88
REVENUES MM$																			
Ethanol	0.0	0.0	0.0	29.0	62.9	68.2	74.0	80.3	87.1	94.6	102.6	111.3	120.8	131.0	142.2	154.3	167.4	181.6	98.5
Furfural	0.0	0.0	0.0	8.9	19.4	21.0	22.8	24.7	26.8	29.1	31.6	34.3	37.2	40.3	43.8	47.5	51.5	55.9	30.3
Electricity	0.0	0.0	0.0	0.0	0.0	0.0	0.0	0.0	0.0	0.0	0.0	0.0	0.0	0.0	0.0	0.0	0.0	0.0	0.0
Landfill	0.0	0.0	0.0	-0.2	-0.5	-0.5	-0.6	-0.6	-0.7	-0.7	-0.8	-0.9	-0.9	-1.0	-1.1	-1.2	-1.3	-1.4	-0.8
TOTALS	0.0	0.0	0.0	37.7	81.8	88.7	96.3	104.4	113.3	122.9	133.4	144.7	157.0	170.4	184.9	200.6	217.6	236.1	128.1

SERI E-0461

BADGER

Date: 20-Sep-

ANALYSIS OF COSTS OF SALES

Year Start:	Jan-84	Jan-85	Jan-86	Jan-87	Jan-88	Jan-89	Jan-90	Jan-91	Jan-92	Jan-93	Jan-94	Jan-95	Jan-96	Jan-97	Jan-98	Jan-99	Jan-2000	Jan-2001	Jan-2002
Year No. :	-1	0	1	2	3	4	5	6	7	8	9	10	11	12	13	14	15	16	17
Plant availability	0%	0%	0%	50%	100%	100%	100%	100%	100%	100%	100%	100%	100%	100%	100%	100%	100%	100%	50%
Stream factor	0%	0%	0%	100%	100%	100%	100%	100%	100%	100%	100%	100%	100%	100%	100%	100%	100%	100%	100%
Inflation + Escalation, effect on operating costs:	1.00	1.09	1.18	1.28	1.39	1.50	1.63	1.77	1.92	2.08	2.26	2.45	2.66	2.89	3.13	3.40	3.69	4.00	4.34
RAW MATERIALS QUANTITIES																			
wood chips	metr tons	0	0	0	264000	528000	528000	528000	528000	528000	528000	528000	528000	528000	528000	528000	528000	528000	264000
sulfuric acid	metr tons	0	0	0	12950	25919	25919	25919	25919	25919	25919	25919	25919	25919	25919	25919	25919	25919	12960
lime	metr tons	0	0	0	11255	22509	22509	22509	22509	22509	22509	22509	22509	22509	22509	22509	22509	22509	11255
other cats & chems		0.00	0.00	0.00	0.50	1.00	1.00	1.00	1.00	1.00	1.00	1.00	1.00	1.00	1.00	1.00	1.00	1.00	0.50
diesel oil	gals	0	0	0	5000	10000	10000	10000	10000	10000	10000	10000	10000	10000	10000	10000	10000	10000	5000
gasoline	MMbals	0.00	0.00	0.00	0.66	1.31	1.31	1.31	1.31	1.31	1.31	1.31	1.31	1.31	1.31	1.31	1.31	1.31	0.66
UNIT COSTS	$/....																		
wood chips	metr tons	42.00	45.57	49.44	53.65	58.21	63.15	68.52	74.35	80.67	87.52	94.96	103.03	111.79	121.29	131.60	142.79	154.93	168.10	182.38
sulfuric acid	metr tons	65.00	70.53	76.52	83.02	90.08	97.74	106.05	115.06	124.84	135.45	146.96	159.46	173.01	187.72	203.67	220.98	239.77	260.15	282.26
lime	metr tons	35.00	37.98	41.20	44.71	48.51	52.63	57.10	61.95	67.22	72.93	79.13	85.86	93.16	101.08	109.67	118.99	129.11	140.08	151.99
other cats & chems	/Yr	550000	596750	647474	702509	762222	827011	897307	973578	1056332	1146121	1243541	1349242	1463927	1588361	1723372	1869859	2028797	2201244	2388150
diesel oil	Gallon	1.00	1.09	1.18	1.28	1.39	1.50	1.63	1.77	1.92	2.08	2.26	2.45	2.66	2.89	3.13	3.40	3.69	4.00	4.34
gasoline	Gallon	0.85	0.92	1.00	1.09	1.18	1.28	1.39	1.50	1.63	1.77	1.92	2.09	2.26	2.45	2.66	2.89	3.14	3.40	3.69
TOTALS	MM$																			
wood chips		0.0	0.0	0.0	14.2	30.7	33.3	36.2	39.3	42.6	46.2	50.1	54.4	59.0	64.0	69.5	75.4	81.8	88.8	48.1
sulfuric acid		0.0	0.0	0.0	1.1	2.3	2.5	2.7	3.0	3.2	3.5	3.8	4.1	4.5	4.9	5.3	5.7	6.2	6.7	3.7
lime		0.0	0.0	0.0	0.5	1.1	1.2	1.3	1.4	1.5	1.6	1.8	1.9	2.1	2.3	2.5	2.7	2.9	3.2	1.7
other cats & chems		0.0	0.0	0.0	0.4	0.8	0.8	0.9	1.0	1.1	1.1	1.2	1.3	1.5	1.6	1.7	1.9	2.0	2.2	1.2
diesel oil		0.0	0.0	0.0	.0	.0	.0	.0	.0	.0	.0	.0	.0	.0	.0	.0	.0	.0	.0	.0
gasoline		0.0	0.0	0.0	0.7	1.5	1.7	1.8	2.0	2.1	2.3	2.5	2.7	3.0	3.2	3.5	3.8	4.1	4.5	2.4
TOTAL VARIABLE COSTS		0.0	0.0	0.0	16.8	36.5	39.6	42.9	46.6	50.6	54.9	59.5	64.6	70.1	76.0	82.5	89.5	97.1	105.3	57.2
FIXED COSTS	Units, unit rates	MM$																		
labor	MM$/yr 1.48	0.00	0.00	0.00	0.45	2.05	2.23	2.41	2.62	2.84	3.08	3.35	3.63	3.94	4.27	4.64	5.03	5.46	5.92	3.21
supervision	MM$/yr 0.05	0.00	0.00	0.00	0.04	0.08	0.09	0.10	0.11	0.12	0.13	0.14	0.15	0.16	0.17	0.19	0.20	0.22	0.24	0.13
	subt 1	0.00	0.00	0.00	0.48	2.13	2.32	2.51	2.73	2.96	3.21	3.48	3.78	4.10	4.45	4.83	5.24	5.68	6.16	3.34
direct overhead	% subt 1 40	0.00	0.00	0.00	0.39	0.85	0.93	1.00	1.09	1.18	1.28	1.39	1.51	1.64	1.78	1.93	2.09	2.27	2.47	1.34
maintenance	% capital 4	0.00	0.00	0.00	3.45	7.48	8.11	8.80	9.55	10.36	11.24	12.20	13.24	14.36	15.58	16.91	18.34	19.90	21.59	11.71
insur & taxes	% capital 2	0.00	0.00	0.00	1.72	3.74	4.06	4.40	4.78	5.18	5.62	6.10	6.62	7.18	7.79	8.45	9.17	9.95	10.80	5.86
royalty	$/yr 250000	0.00	0.00	0.00	0.16	0.35	0.38	0.41	0.44	0.48	0.52	0.57	0.61	0.67	0.72	0.78	0.85	0.92	1.00	0.54
depreciation, (book)		0.00	0.00	0.00	5.42	10.84	10.84	10.84	10.84	10.84	10.84	10.84	10.84	10.84	10.84	10.84	10.84	10.84	10.84	5.42
TOTAL FIXED COSTS		0.00	0.00	0.00	12.13	25.39	26.63	27.97	29.43	31.00	32.72	34.58	36.60	38.79	41.16	43.74	46.53	49.57	52.86	28.22
TOTAL COSTS OF SALES		0.00	0.00	0.00	28.94	61.87	66.21	70.91	76.02	81.56	87.57	94.09	101.17	108.85	117.18	126.22	136.02	146.66	158.21	P

Design Case III

SERI E-0461

BADGER

Date: 20-Sep-84

ANALYSIS OF REVENUES

Year Start:		Jan-84	Jan-85	Jan-86	Jan-87	Jan-88	Jan-89	Jan-90	Jan-91	Jan-92	Jan-93	Jan-94	Jan-95	Jan-96	Jan-97	Jan-98	Jan-99	Jan-2000	Jan-2001	Jan-2002
Year No. :		-1	0	1	2	3	4	5	6	7	8	9	10	11	12	13	14	15	16	17
Plant availibility		0%	0%	0%	50%	100%	100%	100%	100%	100%	100%	100%	100%	100%	100%	100%	100%	100%	100%	50%
Stream factor		0%	0%	0%	100%	100%	100%	100%	100%	100%	100%	100%	100%	100%	100%	100%	100%	100%	100%	100%
Inflation + Escalation, effect on operating costs:		1.00	1.09	1.18	1.28	1.39	1.50	1.63	1.77	1.92	2.08	2.26	2.45	2.66	2.89	3.13	3.40	3.69	4.00	4.34
PRODUCT VOLUMES	Unit																			
Ethanol	MMGals	0.00	0.00	0.00	2.75	5.50	5.50	5.50	5.50	5.50	5.50	5.50	5.50	5.50	5.50	5.50	5.50	5.50	5.50	2.75
Furfural	MMLbs	0.00	0.00	0.00	13.02	26.04	26.04	26.04	26.04	26.04	26.04	26.04	26.04	26.04	26.04	26.04	26.04	26.04	26.04	13.02
Electricity	MWHrs	0	0	0	17600	35200	35200	35200	35200	35200	35200	35200	35200	35200	35200	35200	35200	35200	35200	17600
Landfill	metr Tons	0	0	0	6332	12664	12664	12664	12664	12664	12664	12664	12664	12664	12664	12664	12664	12664	12664	6332
SELLING PRICES	$/....																			
Ethanol	MMGals	1.42	1.54	1.67	1.81	1.97	2.14	2.32	2.51	2.73	2.96	3.21	3.48	3.78	4.10	4.45	4.83	5.24	5.68	6.17
Furfural	MMLbs	0.55	0.60	0.65	0.70	0.76	0.83	0.90	0.97	1.06	1.15	1.24	1.35	1.46	1.59	1.72	1.87	2.03	2.20	2.39
Electricity	MWHrs	50.00	54.25	58.86	63.86	69.29	75.18	81.57	88.51	96.03	104.19	113.05	122.66	133.08	144.40	156.67	169.99	184.44	200.11	217.12
Landfill	metr Tons	-5.50	-5.97	-6.47	-7.03	-7.62	-8.27	-8.97	-9.74	-10.56	-11.46	-12.44	-13.49	-14.64	-15.88	-17.23	-18.70	-20.29	-22.01	-23.88
REVENUES	MM$																			
Ethanol		0.0	0.0	0.0	5.0	10.8	11.7	12.7	13.8	15.0	16.3	17.7	19.2	20.8	22.6	24.5	26.6	28.8	31.3	17.0
Furfural		0.0	0.0	0.0	9.1	19.8	21.5	23.4	25.4	27.5	29.8	32.4	35.1	38.1	41.4	44.9	48.7	52.8	57.3	31.1
Electricity		0.0	0.0	0.0	1.1	2.4	2.6	2.9	3.1	3.4	3.7	4.0	4.3	4.7	5.1	5.5	6.0	6.5	7.0	3.8
Landfill		0.0	0.0	0.0	.0	-0.1	-0.1	-0.1	-0.1	-0.1	-0.1	-0.2	-0.2	-0.2	-0.2	-0.2	-0.2	-0.3	-0.3	-0.2
	TOTALS	0.0	0.0	0.0	15.2	33.0	35.8	38.9	42.2	45.8	49.6	53.9	58.4	63.4	68.8	74.6	81.0	87.9	95.3	51.7

SERI E-0461

BADGER

Date: 20-Sep-84

ANALYSIS OF COSTS OF SALES

Year Start:		Jan-84	Jan-85	Jan-86	Jan-87	Jan-88	Jan-89	Jan-90	Jan-91	Jan-92	Jan-93	Jan-94	Jan-95	Jan-96	Jan-97	Jan-98	Jan-99	Jan-2000	Jan-2001	Jan-2002
Year No. :		-1	0	1	2	3	4	5	6	7	8	9	10	11	12	13	14	15	16	17
Plant availibility		0%	0%	0%	50%	100%	100%	100%	100%	100%	100%	100%	100%	100%	100%	100%	100%	100%	100%	50%
Stream factor		0%	0%	0%	100%	100%	100%	100%	100%	100%	100%	100%	100%	100%	100%	100%	100%	100%	100%	100%
Inflation + Escalation, effect on operating costs:		1.00	1.09	1.18	1.28	1.39	1.50	1.63	1.77	1.92	2.08	2.26	2.45	2.66	2.89	3.13	3.40	3.69	4.00	4.34
RAW MATERIALS QUANTITIES																				
wood chips	metr tons	0	0	0	59040	118080	118080	118080	118080	118080	118080	118080	118080	118080	118080	118080	118080	118080	118080	59040
sulfuric acid	metr tons	0	0	0	1816	3631	3631	3631	3631	3631	3631	3631	3631	3631	3631	3631	3631	3631	3631	1816
lime	metr tons	0	0	0	1839	3677	3677	3677	3677	3677	3677	3677	3677	3677	3677	3677	3677	3677	3677	1839
other cats & chems		0.00	0.00	0.00	0.50	1.00	1.00	1.00	1.00	1.00	1.00	1.00	1.00	1.00	1.00	1.00	1.00	1.00	1.00	0.50
diesel oil	Gals	0	0	0	1000	2000	2000	2000	2000	2000	2000	2000	2000	2000	2000	2000	2000	2000	2000	1000
gasoline	MMGals	0.00	0.00	0.00	0.13	0.26	0.26	0.26	0.26	0.26	0.26	0.26	0.26	0.26	0.26	0.26	0.26	0.26	0.26	0.13
UNIT COSTS	$/....																			
wood chips	metr tons	42.00	45.57	49.44	53.65	58.21	63.15	68.52	74.35	80.67	87.52	94.96	103.03	111.79	121.29	131.60	142.79	154.93	168.10	182.38
sulfuric acid	metr tons	65.00	70.53	76.52	83.02	90.08	97.74	106.05	115.06	124.84	135.45	146.96	159.46	173.01	187.72	203.67	220.98	239.77	260.15	282.26
lime	metr tons	35.00	37.98	41.20	44.71	48.51	52.63	57.10	61.95	67.22	72.93	79.13	85.86	93.16	101.08	109.67	118.99	129.11	140.08	151.99
other cats & chems	/Yr	366760	397935	431759	468459	508278	551481	598357	649217	704401	764275	829238	899724	976200	1059177	1149207	1246890	1352875	1467870	1592639
diesel oil	Gallon	1.00	1.09	1.18	1.28	1.39	1.50	1.63	1.77	1.92	2.08	2.26	2.45	2.66	2.89	3.13	3.40	3.69	4.00	4.34
gasoline	Gallon	0.85	0.92	1.00	1.09	1.18	1.28	1.39	1.50	1.63	1.77	1.92	2.09	2.26	2.45	2.66	2.89	3.14	3.40	3.69
TOTALS	MM$																			
wood chips		0.0	0.0	0.0	3.2	6.9	7.5	8.1	8.8	9.5	10.3	11.2	12.2	13.2	14.3	15.5	16.9	18.3	19.8	10.8
sulfuric acid		0.0	0.0	0.0	0.2	0.3	0.4	0.4	0.4	0.5	0.5	0.5	0.6	0.6	0.7	0.7	0.8	0.9	0.9	0.5
lime		0.0	0.0	0.0	0.1	0.2	0.2	0.2	0.2	0.2	0.3	0.3	0.3	0.3	0.4	0.4	0.4	0.5	0.5	0.3
other cats & chems		0.0	0.0	0.0	0.2	0.5	0.6	0.6	0.6	0.7	0.8	0.8	0.9	1.0	1.1	1.1	1.2	1.4	1.5	0.8
diesel oil		0.0	0.0	0.0	.0	.0	.0	.0	.0	.0	.0	.0	.0	.0	.0	.0	.0	.0	.0	.0
gasoline		0.0	0.0	0.0	0.1	0.3	0.3	0.4	0.4	0.4	0.5	0.5	0.5	0.6	0.6	0.7	0.8	0.8	0.9	0.5
TOTAL VARIABLE COSTS		0.0	0.0	0.0	3.8	8.2	8.9	9.6	10.5	11.4	12.3	13.4	14.5	15.7	17.1	18.5	20.1	21.8	23.7	12.8
FIXED COSTS	Units, unit rates	MM$																		
labor	MM$/yr 1.05	0.00	0.00	0.00	0.67	1.46	1.58	1.71	1.86	2.02	2.19	2.37	2.58	2.79	3.03	3.29	3.57	3.87	4.20	2.28
supervision	MM$/yr 0.06	0.00	0.00	0.00	0.04	0.08	0.09	0.10	0.11	0.12	0.13	0.14	0.15	0.16	0.17	0.19	0.20	0.22	0.24	0.13
	subt 1	0.00	0.00	0.00	0.71	1.54	1.67	1.81	1.96	2.13	2.31	2.51	2.72	2.95	3.21	3.48	3.77	4.09	4.44	2.41
direct overhead	% subt 1 40	0.00	0.00	0.00	0.28	0.62	0.67	0.72	0.79	0.85	0.93	1.00	1.09	1.18	1.28	1.39	1.51	1.64	1.78	0.96
maintenance	% capital 4	0.00	0.00	0.00	1.78	3.87	4.20	4.55	4.94	5.36	5.82	6.31	6.85	7.43	8.06	8.75	9.49	10.30	11.17	6.06
insur & taxes	% capital 2	0.00	0.00	0.00	0.89	1.93	2.10	2.28	2.47	2.68	2.91	3.16	3.42	3.71	4.03	4.37	4.74	5.15	5.59	3.03
royalty	$/yr 250000	0.00	0.00	0.00	0.16	0.35	0.38	0.41	0.44	0.48	0.52	0.57	0.61	0.67	0.72	0.78	0.85	0.92	1.00	0.54
depreciation, (book)		0.00	0.00	0.00	2.81	5.61	5.61	5.61	5.61	5.61	5.61	5.61	5.61	5.61	5.61	5.61	5.61	5.61	5.61	2.81
TOTAL FIXED COSTS		0.00	0.00	0.00	6.63	13.91	14.62	15.39	16.22	17.12	18.10	19.16	20.31	21.56	22.91	24.38	25.98	27.71	29.59	15.81
TOTAL COSTS OF SALES		0.00	0.00	0.00	10.41	22.11	23.51	25.03	26.68	28.48	30.42	32.53	34.82	37.30	39.99	42.91	46.08	49.52	53.26	28.65

Design Case IV

SERI E-0461

BADGER

Date: 20-Sep-84

ANALYSIS OF REVENUES

Year Start:	Jan-84	Jan-85	Jan-86	Jan-87	Jan-88	Jan-89	Jan-90	Jan-91	Jan-92	Jan-93	Jan-94	Jan-95	Jan-96	Jan-97	Jan-98	Jan-99	Jan-2000	Jan-2001	Jan-2002
Year No. :	-1	0	1	2	3	4	5	6	7	8	9	10	11	12	13	14	15	16	17
Plant availibility	0%	0%	0%	50%	100%	100%	100%	100%	100%	100%	100%	100%	100%	100%	100%	100%	100%	100%	50%
Stream factor	0%	0%	0%	100%	100%	100%	100%	100%	100%	100%	100%	100%	100%	100%	100%	100%	100%	100%	100%
Inflation + Escalation, effect on operating costs:	1.00	1.09	1.18	1.28	1.39	1.50	1.63	1.77	1.92	2.08	2.26	2.45	2.66	2.89	3.13	3.40	3.69	4.00	4.34
PRODUCT VOLUMES	**Unit**																		
Ethanol	MMGals	0.00	0.00	0.00	2.75	5.50	5.50	5.50	5.50	5.50	5.50	5.50	5.50	5.50	5.50	5.50	5.50	5.50	2.75
Furfural	MMLbs	0.00	0.00	0.00	13.02	26.04	26.04	26.04	26.04	26.04	26.04	26.04	26.04	26.04	26.04	26.04	26.04	26.04	13.02
Electricity	MWHrs	0	0	0	16400	32800	32800	32800	32800	32800	32800	32800	32800	32800	32800	32800	32800	32800	16400
Landfill	metr Tons	0	0	0	6332	12664	12664	12664	12664	12664	12664	12664	12664	12664	12664	12664	12664	12664	6332
SELLING PRICES	**$/....**																		
Ethanol	MMGals	1.63	1.77	1.92	2.08	2.26	2.45	2.66	2.89	3.13	3.40	3.69	4.00	4.34	4.71	5.11	5.54	6.01	6.52	7.08
Furfural	MMLbs	0.55	0.60	0.65	0.70	0.76	0.83	0.90	0.97	1.06	1.15	1.24	1.35	1.46	1.59	1.72	1.87	2.03	2.20	2.39
Electricity	MWHrs	-60.00	-65.10	-70.63	-76.64	-83.15	-90.22	-97.89	-106.21	-115.24	-125.03	-135.66	-147.19	-159.70	-173.28	-188.00	-203.98	-221.32	-240.14	-260.55
Landfill	metr Tons	-5.50	-5.97	-6.47	-7.03	-7.62	-8.27	-8.97	-9.74	-10.56	-11.46	-12.44	-13.49	-14.64	-15.88	-17.23	-18.70	-20.29	-22.01	-23.88
REVENUES	**MM$**																			
Ethanol		0.0	0.0	0.0	5.7	12.4	13.5	14.6	15.9	17.2	18.7	20.3	22.0	23.9	25.9	28.1	30.5	33.1	35.9	19.5
Furfural		0.0	0.0	0.0	9.1	19.8	21.5	23.4	25.4	27.5	29.8	32.4	35.1	38.1	41.4	44.9	48.7	52.8	57.3	31.1
Electricity		0.0	0.0	0.0	-1.3	-2.7	-3.0	-3.2	-3.5	-3.8	-4.1	-4.4	-4.8	-5.2	-5.7	-6.2	-6.7	-7.3	-7.9	-4.3
Landfill		0.0	0.0	0.0	.0	-0.1	-0.1	-0.1	-0.1	-0.1	-0.1	-0.2	-0.2	-0.2	-0.2	-0.2	-0.2	-0.3	-0.3	-0.2
	TOTALS	0.0	0.0	0.0	13.6	29.4	32.0	34.7	37.6	40.8	44.3	48.0	52.1	56.6	61.4	66.6	72.2	78.4	85.0	46.1

SERI E-0451

BADGER

Date: 20-Sep-84

ANALYSIS OF COSTS OF SALES

Year Start:		Jan-84	Jan-85	Jan-86	Jan-87	Jan-88	Jan-89	Jan-90	Jan-91	Jan-92	Jan-93	Jan-94	Jan-95	Jan-96	Jan-97	Jan-98	Jan-99	Jan-2000	Jan-2001	Jan-2002
Year No. :		-1	0	1	2	3	4	5	6	7	8	9	10	11	12	13	14	15	16	17
Plant availability		0%	0%	0%	50%	100%	100%	100%	100%	100%	100%	100%	100%	100%	100%	100%	100%	100%	100%	50%
Stream factor		0%	0%	0%	100%	100%	100%	100%	100%	100%	100%	100%	100%	100%	100%	100%	100%	100%	100%	100%
Inflation + Escalation,																				
effect on operating costs:		1.00	1.09	1.18	1.28	1.39	1.50	1.63	1.77	1.92	2.08	2.26	2.45	2.66	2.89	3.13	3.40	3.69	4.00	4.34
RAW MATERIALS QUANTITIES																				
wood chips	metr tons	0	0	0	59040	118080	118080	118080	118080	118080	118080	118080	118080	118080	118080	118080	118080	118080	118080	59040
sulfuric acid	metr tons	0	0	0	1816	3631	3631	3631	3631	3631	3631	3631	3631	3631	3631	3631	3631	3631	3631	1816
lime	metr tons	0	0	0	1839	3677	3677	3677	3677	3677	3677	3677	3677	3677	3677	3677	3677	3677	3677	1839
other cats & chems		0.00	0.00	0.00	0.50	1.00	1.00	1.00	1.00	1.00	1.00	1.00	1.00	1.00	1.00	1.00	1.00	1.00	1.00	0.50
diesel oil	Gals	0	0	0	1000	2000	2000	2000	2000	2000	2000	2000	2000	2000	2000	2000	2000	2000	2000	1000
gasoline	MMGals	0.00	0.00	0.00	0.13	0.26	0.26	0.26	0.26	0.26	0.26	0.26	0.26	0.26	0.26	0.26	0.26	0.26	0.26	0.13
UNIT COSTS	$/....																			
wood chips	metr tons	42.00	45.57	49.44	53.65	58.21	63.15	68.52	74.35	80.67	87.52	94.96	103.03	111.79	121.29	131.60	142.79	154.93	168.10	182.38
sulfuric acid	metr tons	65.00	70.53	76.52	83.02	90.08	97.76	106.05	115.04	124.84	135.45	146.96	159.46	173.01	187.72	203.67	220.98	239.77	260.15	282.26
lime	metr tons	35.00	37.98	41.20	44.71	48.51	52.63	57.10	61.95	67.22	72.93	79.13	85.86	93.16	101.08	109.67	118.99	129.11	140.08	151.99
other cats & chems	/Yr	346760	397935	431759	468459	508278	551481	598357	649217	704401	764275	829258	899724	976200	1059177	1149207	1246890	1352875	1467870	1592639
diesel oil	Gallon	1.00	1.09	1.18	1.28	1.39	1.50	1.63	1.77	1.92	2.08	2.26	2.45	2.66	2.89	3.13	3.40	3.69	4.00	4.34
gasoline	Gallon	0.85	0.92	1.00	1.09	1.18	1.28	1.39	1.50	1.63	1.77	1.92	2.09	2.26	2.45	2.66	2.89	3.14	3.40	3.69
TOTALS	MM$																			
wood chips		0.0	0.0	0.0	3.2	6.9	7.5	8.1	8.8	9.5	10.3	11.2	12.2	13.2	14.3	15.5	16.9	18.3	19.8	10.8
sulfuric acid		0.0	0.0	0.0	0.2	0.3	0.4	0.4	0.4	0.5	0.5	0.6	0.6	0.7	0.7	0.8	0.9	0.9	0.5	
lime		0.0	0.0	0.0	0.1	0.2	0.2	0.2	0.2	0.2	0.3	0.3	0.3	0.4	0.4	0.4	0.5	0.5	0.3	
other cats & chems		0.0	0.0	0.0	0.2	0.5	0.6	0.6	0.6	0.7	0.8	0.8	0.9	1.0	1.1	1.1	1.2	1.4	1.5	0.8
diesel oil		0.0	0.0	0.0	.0	.0	.0	.0	.0	.0	.0	.0	.0	.0	.0	.0	.0	.0	.0	.0
gasoline		0.0	0.0	0.0	0.1	0.3	0.3	0.4	0.4	0.4	0.5	0.5	0.5	0.6	0.6	0.7	0.8	0.8	0.9	0.5
TOTAL VARIABLE COSTS		0.0	0.0	0.0	3.8	8.2	8.9	9.6	10.5	11.4	12.3	13.4	14.5	15.7	17.1	18.5	20.1	21.8	23.7	12.8
FIXED COSTS	Units, unit rates	MM$																		
labor	MM$/yr 1.05	0.00	0.00	0.00	0.67	1.46	1.58	1.71	1.86	2.02	2.19	2.37	2.58	2.79	3.03	3.29	3.57	3.87	4.20	2.28
supervision	MM$/yr 0.06	0.00	0.00	0.00	0.04	0.08	0.09	0.10	0.11	0.12	0.13	0.14	0.15	0.16	0.17	0.19	0.20	0.22	0.24	0.13
	subt 1	0.00	0.00	0.00	0.71	1.54	1.67	1.81	1.96	2.13	2.31	2.51	2.72	2.95	3.21	3.48	3.77	4.09	4.44	2.41
direct overhead	% subt 1 40	0.00	0.00	0.00	0.28	0.62	0.67	0.72	0.79	0.85	0.93	1.00	1.09	1.18	1.28	1.39	1.51	1.64	1.78	0.96
maintenance	% capital 4	0.00	0.00	0.00	1.48	3.22	3.50	3.79	4.12	4.47	4.85	5.26	5.70	6.19	6.72	7.29	7.91	8.58	9.31	5.05
insur & taxes	% capital 2	0.00	0.00	0.00	0.74	1.61	1.75	1.90	2.06	2.23	2.42	2.63	2.85	3.09	3.36	3.64	3.95	4.29	4.65	2.52
royalty	$/yr 250000	0.00	0.00	0.00	0.16	0.35	0.38	0.41	0.44	0.48	0.52	0.57	0.61	0.67	0.72	0.78	0.85	0.92	1.00	0.54
depreciation, (book)		0.00	0.00	0.00	2.34	4.68	4.68	4.68	4.68	4.68	4.68	4.68	4.68	4.68	4.68	4.68	4.68	4.68	4.68	2.34
TOTAL FIXED COSTS		0.00	0.00	0.00	5.72	12.01	12.63	13.31	14.04	14.84	15.70	16.64	17.66	18.76	19.96	21.26	22.67	24.20	25.86	13.83
TOTAL COSTS OF SALES		0.00	0.00	0.00	9.49	20.21	21.53	22.96	24.51	26.20	28.03	30.01	32.17	34.50	37.04	39.79	42.77	46.01	49.52	26

Annual Revenues and Cost of Sales (Badger)

Design Case I

SERI E-0461

BADGER

Date: 20-Sep-84

ANALYSIS OF REVENUES

Year Start:	Jan-84	Jan-85	Jan-86	Jan-87	Jan-88	Jan-89	Jan-90	Jan-91	Jan-92	Jan-93	Jan-94	Jan-95	Jan-96	Jan-97	Jan-98	Jan-99	Jan-2000	Jan-2001	Jan-2002
Year No. :	-1	0	1	2	3	4	5	6	7	8	9	10	11	12	13	14	15	16	17
Plant availability	0%	0%	0%	50%	100%	100%	100%	100%	100%	100%	100%	100%	100%	100%	100%	100%	100%	100%	50%
Stream factor	0%	0%	0%	50%	65%	90%	100%	100%	100%	100%	100%	100%	100%	100%	100%	100%	100%	100%	100%
Inflation + Escalation, effect on operating costs:	1.00	1.00	1.00	1.00	1.00	1.00	1.00	1.00	1.00	1.00	1.00	1.00	1.00	1.00	1.00	1.00	1.00	1.00	1.00
PRODUCT VOLUMES Unit																			
Ethanol MMGals	0.00	0.00	0.00	6.88	17.86	24.75	27.50	27.50	27.50	27.50	27.50	27.50	27.50	27.50	27.50	27.50	27.50	27.50	13.75
Furfural MMLbs	0.00	0.00	0.00	32.55	84.63	117.18	130.20	130.20	130.20	130.20	130.20	130.20	130.20	130.20	130.20	130.20	130.20	130.20	65.10
Electricity, MWhrs	0	0	0	44000	114400	158400	176000	176000	176000	176000	176000	176000	176000	176000	176000	176000	176000	176000	88000
Landfill metr Tons	0	0	0	15833	41166	57000	63333	63333	63333	63333	63333	63333	63333	63333	63333	63333	63333	63333	31667
SELLING PRICES $/....																			
Ethanol MMGals	1.80	1.80	1.80	1.80	1.80	1.80	1.80	1.80	1.80	1.80	1.80	1.80	1.80	1.80	1.80	1.80	1.80	1.80	1.80
Furfural MMLbs	0.15	0.15	0.15	0.15	0.15	0.15	0.15	0.15	0.15	0.15	0.15	0.15	0.15	0.15	0.15	0.15	0.15	0.15	0.15
Electricity MWhrs	50.00	50.00	50.00	50.00	50.00	50.00	50.00	50.00	50.00	50.00	50.00	50.00	50.00	50.00	50.00	50.00	50.00	50.00	50.00
Landfill metr Tons	-5.50	-5.50	-5.50	-5.50	-5.50	-5.50	-5.50	-5.50	-5.50	-5.50	-5.50	-5.50	-5.50	-5.50	-5.50	-5.50	-5.50	-5.50	-5.50
REVENUES MM$																			
Ethanol	0.0	0.0	0.0	12.4	32.2	44.6	49.5	49.5	49.5	49.5	49.5	49.5	49.5	49.5	49.5	49.5	49.5	49.5	24.8
Furfural	0.0	0.0	0.0	4.9	12.7	17.6	19.5	19.5	19.5	19.5	19.5	19.5	19.5	19.5	19.5	19.5	19.5	19.5	9.8
Electricity	0.0	0.0	0.0	2.2	5.7	7.9	8.8	8.8	8.8	8.8	8.8	8.8	8.8	8.8	8.8	8.8	8.8	8.8	4.4
Landfill	0.0	0.0	0.0	-0.1	-0.2	-0.3	-0.3	-0.3	-0.3	-0.3	-0.3	-0.3	-0.3	-0.3	-0.3	-0.3	-0.3	-0.3	-0.2
TOTALS	0.0	0.0	0.0	19.4	50.4	69.7	77.5	77.5	77.5	77.5	77.5	77.5	77.5	77.5	77.5	77.5	77.5	77.5	38.7

SERI E-0441

BARGE

Date: 20-Sep-8

ANALYSIS OF COSTS OF SALES

Year Start:		Jan-84	Jan-85	Jan-86	Jan-87	Jan-88	Jan-89	Jan-90	Jan-91	Jan-92	Jan-93	Jan-94	Jan-95	Jan-96	Jan-97	Jan-98	Jan-99	Jan-2000	Jan-2001	Jan-2002
Year No. :		-1	0	1	2	3	4	5	6	7	8	9	10	11	12	13	14	15	16	17
Plant availability		0%	0%	0%	50%	100%	100%	100%	100%	100%	100%	100%	100%	100%	100%	100%	100%	100%	100%	50%
Stream factor		0%	0%	0%	50%	65%	90%	100%	100%	100%	100%	100%	100%	100%	100%	100%	100%	100%	100%	100%
Inflation & Escalation, effect on operating costs:		1.00	1.00	1.00	1.00	1.00	1.00	1.00	1.00	1.00	1.00	1.00	1.00	1.00	1.00	1.00	1.00	1.00	1.00	1.00
RAW MATERIALS QUANTITIES																				
wood chips	metr tons	0	0	0	147600	383760	531360	590400	590400	590400	590400	590400	590400	590400	590400	590400	590400	590400	590400	295200
sulfuric acid	metr tons	0	0	0	4539	11801	16340	18155	18155	18155	18155	18155	18155	18155	18155	18155	18155	18155	18155	9078
lime	metr tons	0	0	0	4596	11949	16545	18383	18383	18383	18383	18383	18383	18383	18383	18383	18383	18383	18383	9192
other cats & chems		0.00	0.00	0.00	0.25	0.65	0.90	1.00	1.00	1.00	1.00	1.00	1.00	1.00	1.00	1.00	1.00	1.00	1.00	0.50
diesel oil	Gals	0	0	0	2500	6500	9000	10000	10000	10000	10000	10000	10000	10000	10000	10000	10000	10000	10000	5000
gasoline	MMGals	0.00	0.00	0.00	0.33	0.85	1.18	1.31	1.31	1.31	1.31	1.31	1.31	1.31	1.31	1.31	1.31	1.31	1.31	0.66
UNIT COSTS	$/....																			
wood chips	metr tons	42.00	42.00	42.00	42.00	42.00	42.00	42.00	42.00	42.00	42.00	42.00	42.00	42.00	42.00	42.00	42.00	42.00	42.00	42.00
sulfuric acid	metr tons	65.00	65.00	65.00	65.00	65.00	65.00	65.00	65.00	65.00	65.00	65.00	65.00	65.00	65.00	65.00	65.00	65.00	65.00	65.00
lime	metr tons	35.00	35.00	35.00	35.00	35.00	35.00	35.00	35.00	35.00	35.00	35.00	35.00	35.00	35.00	35.00	35.00	35.00	35.00	35.00
other cats & chems	/Yr	409800	409800	409800	409800	409800	409800	409800	409800	409800	409800	409800	409800	409800	409800	409800	409800	409800	409800	409800
diesel oil	Gallon	1.00	1.00	1.00	1.00	1.00	1.00	1.00	1.00	1.00	1.00	1.00	1.00	1.00	1.00	1.00	1.00	1.00	1.00	1.00
gasoline	Gallon	0.85	0.85	0.85	0.85	0.85	0.85	0.85	0.85	0.85	0.85	0.85	0.85	0.85	0.85	0.85	0.85	0.85	0.85	0.85
TOTALS	MM$																			
wood chips		0.0	0.0	0.0	6.2	16.1	22.3	24.8	24.8	24.8	24.8	24.8	24.8	24.8	24.8	24.8	24.8	24.8	24.8	12.4
sulfuric acid		0.0	0.0	0.0	0.3	0.8	1.1	1.2	1.2	1.2	1.2	1.2	1.2	1.2	1.2	1.2	1.2	1.2	1.2	0.6
lime		0.0	0.0	0.0	0.2	0.4	0.6	0.6	0.6	0.6	0.6	0.6	0.6	0.6	0.6	0.6	0.6	0.6	0.6	0.3
other cats & chems		0.0	0.0	0.0	0.2	0.4	0.5	0.6	0.6	0.6	0.6	0.6	0.6	0.6	0.6	0.6	0.6	0.6	0.6	0.3
diesel oil		0.0	0.0	0.0	.0	.0	.0	.0	.0	.0	.0	.0	.0	.0	.0	.0	.0	.0	.0	.0
gasoline		0.0	0.0	0.0	0.3	0.7	1.0	1.1	1.1	1.1	1.1	1.1	1.1	1.1	1.1	1.1	1.1	1.1	1.1	0.6
TOTAL VARIABLE COSTS		0.0	0.0	0.0	7.1	18.4	25.5	28.4	28.4	28.4	28.4	28.4	28.4	28.4	28.4	28.4	28.4	28.4	28.4	14.2
FIXED COSTS	Units, unit rates	MM$																		
labor	MM$/yr 1.48	0.00	0.00	0.00	0.74	1.48	1.48	1.48	1.48	1.48	1.48	1.48	1.48	1.48	1.48	1.48	1.48	1.48	1.48	0.74
supervision	MM$/yr 0.08	0.00	0.00	0.00	0.03	0.06	0.08	0.08	0.08	0.08	0.08	0.08	0.08	0.08	0.08	0.08	0.08	0.08	0.08	0.03
	subt 1	0.00	0.00	0.00	0.77	1.54	1.54	1.54	1.54	1.54	1.54	1.54	1.54	1.54	1.54	1.54	1.54	1.54	1.54	0.77
direct overhead	% subt 1 40	0.00	0.00	0.00	0.31	0.62	0.62	0.62	0.62	0.62	0.62	0.62	0.62	0.62	0.62	0.62	0.62	0.62	0.62	0.31
maintenance	% capital 4	0.00	0.00	0.00	2.80	5.59	5.59	5.59	5.59	5.59	5.59	5.59	5.59	5.59	5.59	5.59	5.59	5.59	5.59	2.80
insur & taxes	% capital 2	0.00	0.00	0.00	1.40	2.80	2.80	2.80	2.80	2.80	2.80	2.80	2.80	2.80	2.80	2.80	2.80	2.80	2.80	1.40
royalty	$/yr 250000	0.00	0.00	0.00	0.13	0.25	0.25	0.25	0.25	0.25	0.25	0.25	0.25	0.25	0.25	0.25	0.25	0.25	0.25	0.13
depreciation, (book)		0.00	0.00	0.00	4.51	9.02	9.02	9.02	9.02	9.02	9.02	9.02	9.02	9.02	9.02	9.02	9.02	9.02	9.02	4.51
TOTAL FIXED COSTS		0.00	0.00	0.00	9.91	19.81	19.81	19.81	19.81	19.81	19.81	19.81	19.81	19.81	19.81	19.81	19.81	19.81	19.81	9.91
TOTAL COSTS OF SALES		0.00	0.00	0.00	16.99	38.24	45.33	48.16	48.16	48.16	48.16	48.16	48.16	48.16	48.16	48.16	48.16	48.16	48.16	24.[illegible]

Design Case II

SERI E-0461

BADGER

Date: 20-Sep-

ANALYSIS OF REVENUES

Year Start:	Jan-84	Jan-85	Jan-86	Jan-87	Jan-88	Jan-89	Jan-90	Jan-91	Jan-92	Jan-93	Jan-94	Jan-95	Jan-96	Jan-97	Jan-98	Jan-99	Jan-2000	Jan-2001	Jan-2002
Year No. :	-1	0	1	2	3	4	5	6	7	8	9	10	11	12	13	14	15	16	17
Plant availability	0%	0%	0%	50%	100%	100%	100%	100%	100%	100%	100%	100%	100%	100%	100%	100%	100%	100%	50%
Stream factor	0%	0%	0%	50%	45%	90%	100%	100%	100%	100%	100%	100%	100%	100%	100%	100%	100%	100%	100%
Inflation + Escalation, effect on operating costs:	1.00	1.00	1.00	1.00	1.00	1.00	1.00	1.00	1.00	1.00	1.00	1.00	1.00	1.00	1.00	1.00	1.00	1.00	1.00
PRODUCT VOLUMES Unit																			
Ethanol MMGals	0.00	0.00	0.00	6.88	17.86	24.75	27.50	27.50	27.50	27.50	27.50	27.50	27.50	27.50	27.50	27.50	27.50	27.50	13.75
Furfural MMLbs	0.00	0.00	0.00	23.29	60.54	83.83	93.14	93.14	93.14	93.14	93.14	93.14	93.14	93.14	93.14	93.14	93.14	93.14	46.57
Electricity MWHrs	0	0	0	0	0	0	0	0	0	0	0	0	0	0	0	0	0	0	0
Landfill metr tons	0	0	0	15833	41166	57000	63333	63333	63333	63333	63333	63333	63333	63333	63333	63333	63333	63333	31667
SELLING PRICES $/.....																			
Ethanol MMGals	2.22	2.22	2.22	2.22	2.22	2.22	2.22	2.22	2.22	2.22	2.22	2.22	2.22	2.22	2.22	2.22	2.22	2.22	2.22
Furfural MMLbs	0.15	0.15	0.15	0.15	0.15	0.15	0.15	0.15	0.15	0.15	0.15	0.15	0.15	0.15	0.15	0.15	0.15	0.15	0.15
Electricity MWHrs	50.00	50.00	50.00	50.00	50.00	50.00	50.00	50.00	50.00	50.00	50.00	50.00	50.00	50.00	50.00	50.00	50.00	50.00	50.00
Landfill metr tons	-5.50	-5.50	-5.50	-5.50	-5.50	-5.50	-5.50	-5.50	-5.50	-5.50	-5.50	-5.50	-5.50	-5.50	-5.50	-5.50	-5.50	-5.50	-5.50
REVENUES MM$																			
Ethanol	0.0	0.0	0.0	15.3	39.7	54.9	61.1	61.1	61.1	61.1	61.1	61.1	61.1	61.1	61.1	61.1	61.1	61.1	30.5
Furfural	0.0	0.0	0.0	3.5	9.1	12.6	14.0	14.0	14.0	14.0	14.0	14.0	14.0	14.0	14.0	14.0	14.0	14.0	7.0
Electricity	0.0	0.0	0.0	0.0	0.0	0.0	0.0	0.0	0.0	0.0	0.0	0.0	0.0	0.0	0.0	0.0	0.0	0.0	0.0
Landfill	0.0	0.0	0.0	-0.1	-0.2	-0.3	-0.3	-0.3	-0.3	-0.3	-0.3	-0.3	-0.3	-0.3	-0.3	-0.3	-0.3	-0.3	-0.2
TOTALS	0.0	0.0	0.0	18.7	48.5	67.2	74.7	74.7	74.7	74.7	74.7	74.7	74.7	74.7	74.7	74.7	74.7	74.7	37.3

SERI E-0461

BADGER

Date: 20-Sep-84

ANALYSIS OF COSTS OF SALES

Year Start:		Jan-84	Jan-85	Jan-86	Jan-87	Jan-88	Jan-89	Jan-90	Jan-91	Jan-92	Jan-93	Jan-94	Jan-95	Jan-96	Jan-97	Jan-98	Jan-99	Jan-2000	Jan-2001	Jan-2002
Year No. :		-1	0	1	2	3	4	5	6	7	8	9	10	11	12	13	14	15	16	17
Plant availibility		0%	0%	0%	50%	100%	100%	100%	100%	100%	100%	100%	100%	100%	100%	100%	100%	100%	100%	50%
Stream factor		0%	0%	0%	50%	65%	90%	100%	100%	100%	100%	100%	100%	100%	100%	100%	100%	100%	100%	100%
Inflation + Escalation, effect on operating costs:		1.00	1.00	1.00	1.00	1.00	1.00	1.00	1.00	1.00	1.00	1.00	1.00	1.00	1.00	1.00	1.00	1.00	1.00	1.00
RAW MATERIALS QUANTITIES																				
wood chips	metr tons	0	0	0	132000	343200	475200	528000	528000	528000	528000	528000	528000	526000	526000	528000	528000	528000	528000	264000
sulfuric acid	metr tons	0	0	0	6480	16847	23327	25919	25919	25919	25919	25919	25919	25919	25919	25919	25919	25919	25919	12960
lime	metr tons	0	0	0	5627	14631	20256	22509	22509	22509	22509	22509	22509	22509	22509	22509	22509	22509	22509	11255
other cats & chems		0.00	0.00	0.00	0.25	0.65	0.90	1.00	1.00	1.00	1.00	1.00	1.00	1.00	1.00	1.00	1.00	1.00	1.00	0.50
diesel oil	Gals	0	0	0	2500	6500	9000	10000	10000	10000	10000	10000	10000	10000	10000	10000	10000	10000	10000	5000
gasoline	MMGals	0.00	0.00	0.00	0.33	0.85	1.18	1.31	1.31	1.31	1.31	1.31	1.31	1.31	1.31	1.31	1.31	1.31	1.31	0.66
UNIT COSTS	$/....																			
wood chips	metr tons	42.00	42.00	42.00	42.00	42.00	42.00	42.00	42.00	42.00	42.00	42.00	42.00	42.00	42.00	42.00	42.00	42.00	42.00	42.00
sulfuric acid	metr Tons	65.00	65.00	65.00	65.00	65.00	65.00	65.00	65.00	65.00	65.00	65.00	65.00	65.00	65.00	65.00	65.00	65.00	65.00	65.00
lime	metr Tons	35.00	35.00	35.00	35.00	35.00	35.00	35.00	35.00	35.00	35.00	35.00	35.00	35.00	35.00	35.00	35.00	35.00	35.00	35.00
other cats & chems	/Yr	550000	550000	550000	550000	550000	550000	550000	550000	550000	550000	550000	550000	550000	550000	550000	550000	550000	550000	550000
diesel oil	Gallon	1.00	1.00	1.00	1.00	1.00	1.00	1.00	1.00	1.00	1.00	1.00	1.00	1.00	1.00	1.00	1.00	1.00	1.00	1.00
gasoline	Gallon	0.85	0.85	0.85	0.85	0.85	0.85	0.85	0.85	0.85	0.85	0.85	0.85	0.85	0.85	0.85	0.85	0.85	0.85	0.85
TOTALS	MM$																			
wood chips		0.0	0.0	0.0	5.5	14.4	20.0	22.2	22.2	22.2	22.2	22.2	22.2	22.2	22.2	22.2	22.2	22.2	22.2	11.1
sulfuric acid		0.0	0.0	0.0	0.4	1.1	1.5	1.7	1.7	1.7	1.7	1.7	1.7	1.7	1.7	1.7	1.7	1.7	1.7	0.8
lime		0.0	0.0	0.0	0.2	0.5	0.7	0.8	0.8	0.8	0.8	0.8	0.8	0.8	0.8	0.8	0.8	0.8	0.8	0.4
other cats & chems		0.0	0.0	0.0	0.1	0.4	0.5	0.6	0.6	0.6	0.6	0.6	0.6	0.6	0.6	0.6	0.6	0.6	0.6	0.3
diesel oil		0.0	0.0	0.0	.0	.0	.0	.0	.0	.0	.0	.0	.0	.0	.0	.0	.0	.0	.0	.0
gasoline		0.0	0.0	0.0	0.3	0.7	1.0	1.1	1.1	1.1	1.1	1.1	1.1	1.1	1.1	1.1	1.1	1.1	1.1	0.6
TOTAL VARIABLE COSTS		0.0	0.0	0.0	6.6	17.1	23.7	26.3	26.3	26.3	26.3	26.3	26.3	26.3	26.3	26.3	26.3	26.3	26.3	13.2
FIXED COSTS	Units, unit rates	MM$																		
labor	MM$/yr 1.48	0.00	0.00	0.00	0.74	1.48	1.48	1.48	1.48	1.48	1.48	1.48	1.48	1.48	1.48	1.48	1.48	1.48	1.48	0.74
supervision	MM$/yr 0.06	0.00	0.00	0.00	0.03	0.06	0.06	0.06	0.06	0.06	0.06	0.06	0.06	0.06	0.06	0.06	0.06	0.06	0.06	0.03
	subt 1	0.00	0.00	0.00	0.77	1.54	1.54	1.54	1.54	1.54	1.54	1.54	1.54	1.54	1.54	1.54	1.54	1.54	1.54	0.77
direct overhead	% subt 1 40	0.00	0.00	0.00	0.31	0.62	0.62	0.62	0.62	0.62	0.62	0.62	0.62	0.62	0.62	0.62	0.62	0.62	0.62	0.31
maintenance	% capital 4	0.00	0.00	0.00	2.70	5.40	5.40	5.40	5.40	5.40	5.40	5.40	5.40	5.40	5.40	5.40	5.40	5.40	5.40	2.70
insur & taxes	% capital 2	0.00	0.00	0.00	1.35	2.70	2.70	2.70	2.70	2.70	2.70	2.70	2.70	2.70	2.70	2.70	2.70	2.70	2.70	1.35
royalty	$/yr 250000	0.00	0.00	0.00	0.13	0.25	0.25	0.25	0.25	0.25	0.25	0.25	0.25	0.25	0.25	0.25	0.25	0.25	0.25	0.13
depreciation, (book)		0.00	0.00	0.00	4.35	8.70	8.70	8.70	8.70	8.70	8.70	8.70	8.70	8.70	8.70	8.70	8.70	8.70	8.70	4.35
TOTAL FIXED COSTS		0.00	0.00	0.00	9.60	19.20	19.20	19.20	19.20	19.20	19.20	19.20	19.20	19.20	19.20	19.20	19.20	19.20	19.20	9.60
TOTAL COSTS OF SALES		0.00	0.00	0.00	16.18	36.31	42.89	45.52	45.52	45.52	45.52	45.52	45.52	45.52	45.52	45.52	45.52	45.52	45.52	22.76

Design Case III

SERI E-0461

BADGER

Date: 20-Sep-84

ANALYSIS OF REVENUES

Year Start:	Jan-84	Jan-85	Jan-86	Jan-87	Jan-88	Jan-89	Jan-90	Jan-91	Jan-92	Jan-93	Jan-94	Jan-95	Jan-96	Jan-97	Jan-98	Jan-99	Jan-2000	Jan-2001	Jan-2002
Year No. :	-1	0	1	2	3	4	5	6	7	8	9	10	11	12	13	14	15	16	17
Plant availability	0%	0%	0%	50%	100%	100%	100%	100%	100%	100%	100%	100%	100%	100%	100%	100%	100%	100%	50%
Stream factor	0%	0%	0%	50%	65%	90%	100%	100%	100%	100%	100%	100%	100%	100%	100%	100%	100%	100%	100%
Inflation + Escalation, effect on operating costs:	1.00	1.00	1.00	1.00	1.00	1.00	1.00	1.00	1.00	1.00	1.00	1.00	1.00	1.00	1.00	1.00	1.00	1.00	1.00
PRODUCT VOLUMES	**Unit**																		
Ethanol	MMGals	0.00	0.00	0.00	1.38	3.58	4.95	5.50	5.50	5.50	5.50	5.50	5.50	5.50	5.50	5.50	5.50	5.50	2.75
Furfural	MMLbs	0.00	0.00	0.00	0.51	1.32	1.83	2.04	2.04	2.04	2.04	2.04	2.04	2.04	2.04	2.04	2.04	2.04	1.02
Electricity	MWHrs	0	0	0	8800	22880	31680	35200	35200	35200	35200	35200	35200	35200	35200	35200	35200	35200	17600
Landfill	metr Tons	0	0	0	3166	8232	11398	12664	12664	12664	12664	12664	12664	12664	12664	12664	12664	12664	6332
SELLING PRICES	**$/....**																		
Ethanol	MMGals	2.83	2.83	2.83	2.83	2.83	2.83	2.83	2.83	2.83	2.83	2.83	2.83	2.83	2.83	2.83	2.83	2.83	2.83
Furfural	MMLbs	0.55	0.55	0.55	0.55	0.55	0.55	0.55	0.55	0.55	0.55	0.55	0.55	0.55	0.55	0.55	0.55	0.55	0.55
Electricity	MWHrs	50.00	50.00	50.00	50.00	50.00	50.00	50.00	50.00	50.00	50.00	50.00	50.00	50.00	50.00	50.00	50.00	50.00	50.00
Landfill	metr Tons	-5.50	-5.50	-5.50	-5.50	-5.50	-5.50	-5.50	-5.50	-5.50	-5.50	-5.50	-5.50	-5.50	-5.50	-5.50	-5.50	-5.50	-5.50
REVENUES	**MM$**																		
Ethanol		0.0	0.0	0.0	3.9	10.1	14.0	15.6	15.6	15.6	15.6	15.6	15.6	15.6	15.6	15.6	15.6	15.6	7.8
Furfural		0.0	0.0	0.0	0.3	0.7	1.0	1.1	1.1	1.1	1.1	1.1	1.1	1.1	1.1	1.1	1.1	1.1	0.6
Electricity		0.0	0.0	0.0	3.6	9.3	12.9	14.3	14.3	14.3	14.3	14.3	14.3	14.3	14.3	14.3	14.3	14.3	7.2
Landfill		0.0	0.0	0.0	0.4	1.1	1.6	1.8	1.8	1.8	1.8	1.8	1.8	1.8	1.8	1.8	1.8	1.8	0.9
		0.0	0.0	0.0	-.0	-.0	-0.1	-0.1	-0.1	-0.1	-0.1	-0.1	-0.1	-0.1	-0.1	-0.1	-0.1	-0.1	-.0
	TOTALS	0.0	0.0	0.0	7.9	20.5	28.4	31.6	31.6	31.6	31.6	31.6	31.6	31.6	31.6	31.6	31.6	31.6	15.8

SERI E-0461

BADGER

Date: 28-Sep-8

ANALYSIS OF COSTS OF SALES

Year Start:		Jan-84	Jan-85	Jan-86	Jan-87	Jan-88	Jan-89	Jan-90	Jan-91	Jan-92	Jan-93	Jan-94	Jan-95	Jan-96	Jan-97	Jan-98	Jan-99	Jan-2000	Jan-2001	Jan-2002
Year No. :		-1	0	1	2	3	4	5	6	7	8	9	10	11	12	13	14	15	16	17
Plant availability		0%	0%	0%	50%	100%	100%	100%	100%	100%	100%	100%	100%	100%	100%	100%	100%	100%	100%	50%
Stream factor		0%	0%	0%	50%	65%	90%	100%	100%	100%	100%	100%	100%	100%	100%	100%	100%	100%	100%	100%
Inflation + Escalation, affect on operating costs:		1.00	1.00	1.00	1.00	1.00	1.00	1.00	1.00	1.00	1.00	1.00	1.00	1.00	1.00	1.00	1.00	1.00	1.00	1.00
RAW MATERIALS QUANTITIES																				
wood chips	metr tons	0	0	0	29520	76752	106272	118080	118080	118080	118080	118080	118080	118080	118080	118080	118080	118080	118080	59040
sulfuric acid	metr tons	0	0	0	908	2360	3268	3631	3631	3631	3631	3631	3631	3631	3631	3631	3631	3631	3631	1816
lime	metr tons	0	0	0	919	2390	3309	3677	3677	3677	3677	3677	3677	3677	3677	3677	3677	3677	3677	1839
other cats & chems	/Yr	0.00	0.00	0.00	0.25	0.65	0.90	1.00	1.00	1.00	1.00	1.00	1.00	1.00	1.00	1.00	1.00	1.00	1.00	0.50
diesel oil	Gals	0	0	0	500	1300	1800	2000	2000	2000	2000	2000	2000	2000	2000	2000	2000	2000	2000	1000
gasoline	MMGals	0.00	0.00	0.00	0.07	0.17	0.23	0.26	0.26	0.26	0.26	0.26	0.26	0.26	0.26	0.26	0.26	0.26	0.26	0.13
UNIT COSTS	$/....																			
wood chips	metr tons	42.00	42.00	42.00	42.00	42.00	42.00	42.00	42.00	42.00	42.00	42.00	42.00	42.00	42.00	42.00	42.00	42.00	42.00	42.00
sulfuric acid	metr tons	65.00	65.00	65.00	65.00	65.00	65.00	65.00	65.00	65.00	65.00	65.00	65.00	65.00	65.00	65.00	65.00	65.00	65.00	65.00
lime	metr tons	35.00	35.00	35.00	35.00	35.00	35.00	35.00	35.00	35.00	35.00	35.00	35.00	35.00	35.00	35.00	35.00	35.00	35.00	35.00
other cats & chems	/Yr	366760	366760	366760	366760	366760	366760	366760	366760	366760	366760	366760	366760	366760	366760	366760	366760	366760	366760	366760
diesel oil	Gallon	1.00	1.00	1.00	1.00	1.00	1.00	1.00	1.00	1.00	1.00	1.00	1.00	1.00	1.00	1.00	1.00	1.00	1.00	1.00
gasoline	Gallon	0.85	0.85	0.85	0.85	0.85	0.85	0.85	0.85	0.85	0.85	0.85	0.85	0.85	0.85	0.85	0.85	0.85	0.85	0.85
TOTALS	MM$																			
wood chips		0.0	0.0	0.0	1.2	3.2	4.5	5.0	5.0	5.0	5.0	5.0	5.0	5.0	5.0	5.0	5.0	5.0	5.0	2.5
sulfuric acid		0.0	0.0	0.0	0.1	0.2	0.2	0.2	0.2	0.2	0.2	0.2	0.2	0.2	0.2	0.2	0.2	0.2	0.2	0.1
lime		0.0	0.0	0.0	.0	0.1	0.1	0.1	0.1	0.1	0.1	0.1	0.1	0.1	0.1	0.1	0.1	0.1	0.1	0.1
other cats & chems		0.0	0.0	0.0	0.1	0.2	0.3	0.4	0.4	0.4	0.4	0.4	0.4	0.4	0.4	0.4	0.4	0.4	0.4	0.2
diesel oil		0.0	0.0	0.0	.0	.0	.0	.0	.0	.0	.0	.0	.0	.0	.0	.0	.0	.0	.0	.0
gasoline		0.0	0.0	0.0	0.1	0.1	0.2	0.2	0.2	0.2	0.2	0.2	0.2	0.2	0.2	0.2	0.2	0.2	0.2	0.1
TOTAL VARIABLE COSTS		0.0	0.0	0.0	1.5	3.8	5.1	5.9	5.9	5.9	5.9	5.9	5.9	5.9	5.9	5.9	5.9	5.9	5.9	3.0
FIXED COSTS	Units, unit rates	MM$																		
labor	MM$/yr 1.05	0.00	0.00	0.00	0.53	1.05	1.05	1.05	1.05	1.05	1.05	1.05	1.05	1.05	1.05	1.05	1.05	1.05	1.05	0.53
supervision	MM$/yr 0.06	0.00	0.00	0.00	0.03	0.06	0.06	0.06	0.06	0.06	0.06	0.06	0.06	0.06	0.06	0.06	0.06	0.06	0.06	0.03
	subt 1	0.00	0.00	0.00	0.56	1.11	1.11	1.11	1.11	1.11	1.11	1.11	1.11	1.11	1.11	1.11	1.11	1.11	1.11	0.56
direct overhead	% subt 1 40	0.00	0.00	0.00	0.22	0.44	0.44	0.44	0.44	0.44	0.44	0.44	0.44	0.44	0.44	0.44	0.44	0.44	0.44	0.22
maintenance	% capital 4	0.00	0.00	0.00	1.40	2.79	2.79	2.79	2.79	2.79	2.79	2.79	2.79	2.79	2.79	2.79	2.79	2.79	2.79	1.40
insur & taxes	% capital 2	0.00	0.00	0.00	0.70	1.40	1.40	1.40	1.40	1.40	1.40	1.40	1.40	1.40	1.40	1.40	1.40	1.40	1.40	0.70
royalty	$/yr 250000	0.00	0.00	0.00	0.13	0.25	0.25	0.25	0.25	0.25	0.25	0.25	0.25	0.25	0.25	0.25	0.25	0.25	0.25	0.13
depreciation, (book)		0.00	0.00	0.00	2.25	4.50	4.50	4.50	4.50	4.50	4.50	4.50	4.50	4.50	4.50	4.50	4.50	4.50	4.50	2.25
TOTAL FIXED COSTS		0.00	0.00	0.00	5.25	10.49	10.49	10.49	10.49	10.49	10.49	10.49	10.49	10.49	10.49	10.49	10.49	10.49	10.49	5.25
TOTAL COSTS OF SALES		0.00	0.00	0.00	6.75	14.30	15.62	16.41	16.41	16.41	16.41	16.41	16.41	16.41	16.41	16.41	16.41	16.41	16.41	8

Design Case IV

SERI E-04a1

BADGER

Date: 20-Sep-

ANALYSIS OF REVENUES

Year Start:		Jan-84	Jan-85	Jan-86	Jan-87	Jan-88	Jan-89	Jan-90	Jan-91	Jan-92	Jan-93	Jan-94	Jan-95	Jan-96	Jan-97	Jan-98	Jan-99	Jan-2000	Jan-2001	Jan-2002
Year No. :		-1	0	1	2	3	4	5	6	7	8	9	10	11	12	13	14	15	16	17
Plant availability		0%	0%	0%	50%	100%	100%	100%	100%	100%	100%	100%	100%	100%	100%	100%	100%	100%	100%	50%
Stream factor		0%	0%	0%	50%	65%	90%	100%	100%	100%	100%	100%	100%	100%	100%	100%	100%	100%	100%	100%
Inflation & Escalation, effect on operating costs:		1.00	1.00	1.00	1.00	1.00	1.00	1.00	1.00	1.00	1.00	1.00	1.00	1.00	1.00	1.00	1.00	1.00	1.00	1.00
PRODUCT VOLUMES	Unit																			
Ethanol	MMGals	0.00	0.00	0.00	1.38	3.58	4.95	5.50	5.50	5.50	5.50	5.50	5.50	5.50	5.50	5.50	5.50	5.50	5.50	2.75
Furfural	MMLbs	0.00	0.00	0.00	4.51	10.73	23.44	26.04	26.04	26.04	26.04	26.04	26.04	26.04	26.04	26.04	26.04	26.04	26.04	13.02
Electricity	MMkWh	0	0	0	8200	21320	29520	32800	32800	32800	32800	32800	32800	32800	32800	32800	32800	32800	32800	16400
Landfill	Metr Tons	0	0	0	3166	8232	11398	12664	12664	12664	12664	12664	12664	12664	12664	12664	12664	12664	12664	6332
SELLING PRICES	$/....																			
Ethanol	MMGals	2.85	2.85	2.85	2.85	2.85	2.85	2.85	2.85	2.85	2.85	2.85	2.85	2.85	2.85	2.85	2.85	2.85	2.85	2.85
Furfural	MMLbs	0.55	0.55	0.55	0.55	0.55	0.55	0.55	0.55	0.55	0.55	0.55	0.55	0.55	0.55	0.55	0.55	0.55	0.55	0.55
Electricity	MMkWh	-60.00	-60.00	-60.00	-60.00	-60.00	-60.00	-60.00	-60.00	-60.00	-60.00	-60.00	-60.00	-60.00	-60.00	-60.00	-60.00	-60.00	-60.00	-60.00
Landfill	Metr Tons	-5.50	-5.50	-5.50	-5.50	-5.50	-5.50	-5.50	-5.50	-5.50	-5.50	-5.50	-5.50	-5.50	-5.50	-5.50	-5.50	-5.50	-5.50	-5.50
REVENUES	MM$																			
Ethanol		0.0	0.0	0.0	3.9	10.2	14.1	15.7	15.7	15.7	15.7	15.7	15.7	15.7	15.7	15.7	15.7	15.7	15.7	7.8
Furfural		0.0	0.0	0.0	3.6	9.3	12.9	14.3	14.3	14.3	14.3	14.3	14.3	14.3	14.3	14.3	14.3	14.3	14.3	7.2
Electricity		0.0	0.0	0.0	-0.5	-1.3	-1.8	-2.0	-2.0	-2.0	-2.0	-2.0	-2.0	-2.0	-2.0	-2.0	-2.0	-2.0	-2.0	-1.0
Landfill		0.0	0.0	0.0	.0	.0	-0.1	-0.1	-0.1	-0.1	-0.1	-0.1	-0.1	-0.1	-0.1	-0.1	-0.1	-0.1	-0.1	.0
	TOTALS	0.0	0.0	0.0	7.0	18.2	25.2	28.0	28.0	28.0	28.0	28.0	28.0	28.0	28.0	28.0	28.0	28.0	28.0	14.0

29

ANALYSIS OF COSTS OF SALES

Year Start:			Jan-84	Jan-85	Jan-86	Jan-87	Jan-88	Jan-89	Jan-90	Jan-91	Jan-92	Jan-93	Jan-94	Jan-95	Jan-96	Jan-97	Jan-98	Jan-99	Jan-2000	Jan-2001	Jan-2002
Year No. :			-1	0	1	2	3	4	5	6	7	8	9	10	11	12	13	14	15	16	17
Plant availability			0%	0%	0%	50%	100%	100%	100%	100%	100%	100%	100%	100%	100%	100%	100%	100%	100%	100%	50%
Stream factor			0%	0%	0%	50%	65%	90%	100%	100%	100%	100%	100%	100%	100%	100%	100%	100%	100%	100%	100%
Inflation + Escalation, effect on operating costs:			1.00	1.00	1.00	1.00	1.00	1.00	1.00	1.00	1.00	1.00	1.00	1.00	1.00	1.00	1.00	1.00	1.00	1.00	1.00
RAW MATERIALS QUANTITIES																					
wood chips	metr tons		0	0	0	29520	76752	106272	118080	118080	118080	118080	118080	118080	118080	118080	118080	118080	118080	118080	59040
sulfuric acid	metr tons		0	0	0	908	2360	3268	3631	3631	3631	3631	3631	3631	3631	3631	3631	3631	3631	3631	1816
lime	metr tons		0	0	0	919	2390	3309	3677	3677	3677	3677	3677	3677	3677	3677	3677	3677	3677	3677	1839
other cats & chems			0.00	0.00	0.00	0.25	0.65	0.90	1.00	1.00	1.00	1.00	1.00	1.00	1.00	1.00	1.00	1.00	1.00	1.00	0.50
diesel oil	Gals		0	0	0	500	1300	1800	2000	2000	2000	2000	2000	2000	2000	2000	2000	2000	2000	2000	1000
gasoline	MMGals		0.00	0.00	0.00	0.07	0.17	0.23	0.26	0.26	0.26	0.26	0.26	0.26	0.26	0.26	0.26	0.26	0.26	0.26	0.13
UNIT COSTS	$/....																				
wood chips	metr tons		42.00	42.00	42.00	42.00	42.00	42.00	42.00	42.00	42.00	42.00	42.00	42.00	42.00	42.00	42.00	42.00	42.00	42.00	42.00
sulfuric acid	metr tons		65.00	65.00	65.00	65.00	65.00	65.00	65.00	65.00	65.00	65.00	65.00	65.00	65.00	65.00	65.00	65.00	65.00	65.00	65.00
lime	metr tons		35.00	35.00	35.00	35.00	35.00	35.00	35.00	35.00	35.00	35.00	35.00	35.00	35.00	35.00	35.00	35.00	35.00	35.00	35.00
other cats & chems	/Yr		366760	366760	366760	366760	366760	366760	366760	366760	366760	366760	366760	366760	366760	366760	366760	366760	366760	366760	366760
diesel oil	Gallon		1.00	1.00	1.00	1.00	1.00	1.00	1.00	1.00	1.00	1.00	1.00	1.00	1.00	1.00	1.00	1.00	1.00	1.00	1.00
gasoline	Gallon		0.85	0.85	0.85	0.85	0.85	0.85	0.85	0.85	0.85	0.85	0.85	0.85	0.85	0.85	0.85	0.85	0.85	0.85	0.85
TOTALS	MM$																				
wood chips			0.0	0.0	0.0	1.2	3.2	4.5	5.0	5.0	5.0	5.0	5.0	5.0	5.0	5.0	5.0	5.0	5.0	5.0	2.5
sulfuric acid			0.0	0.0	0.0	0.1	0.2	0.2	0.2	0.2	0.2	0.2	0.2	0.2	0.2	0.2	0.2	0.2	0.2	0.2	0.1
lime			0.0	0.0	0.0	.0	0.1	0.1	0.1	0.1	0.1	0.1	0.1	0.1	0.1	0.1	0.1	0.1	0.1	0.1	0.1
other cats & chems			0.0	0.0	0.0	0.1	0.2	0.3	0.4	0.4	0.4	0.4	0.4	0.4	0.4	0.4	0.4	0.4	0.4	0.4	0.2
diesel oil			0.0	0.0	0.0	.0	.0	.0	.0	.0	.0	.0	.0	.0	.0	.0	.0	.0	.0	.0	.0
gasoline			0.0	0.0	0.0	0.1	0.1	0.2	0.2	0.2	0.2	0.2	0.2	0.2	0.2	0.2	0.2	0.2	0.2	0.2	0.1
TOTAL VARIABLE COSTS			0.0	0.0	0.0	1.5	3.8	5.3	5.9	5.9	5.9	5.9	5.9	5.9	5.9	5.9	5.9	5.9	5.9	5.9	3.0
FIXED COSTS	Units, unit rates		MM$																		
labor	MM$/yr	1.05	0.00	0.00	0.00	0.53	1.05	1.05	1.05	1.05	1.05	1.05	1.05	1.05	1.05	1.05	1.05	1.05	1.05	1.05	0.53
supervision	MM$/yr	0.06	0.00	0.00	0.00	0.03	0.06	0.06	0.06	0.06	0.06	0.06	0.06	0.06	0.06	0.06	0.06	0.06	0.06	0.06	0.03
		subt 1	0.00	0.00	0.00	0.56	1.11	1.11	1.11	1.11	1.11	1.11	1.11	1.11	1.11	1.11	1.11	1.11	1.11	1.11	0.56
direct overhead	% subt 1	40	0.00	0.00	0.00	0.22	0.44	0.44	0.44	0.44	0.44	0.44	0.44	0.44	0.44	0.44	0.44	0.44	0.44	0.44	0.22
maintenance	% capital	4	0.00	0.00	0.00	1.16	2.33	2.33	2.33	2.33	2.33	2.33	2.33	2.33	2.33	2.33	2.33	2.33	2.33	2.33	1.16
insur & taxes	% capital	2	0.00	0.00	0.00	0.58	1.16	1.16	1.16	1.16	1.16	1.16	1.16	1.16	1.16	1.16	1.16	1.16	1.16	1.16	0.58
royalty	$/yr	250000	0.00	0.00	0.00	0.13	0.25	0.25	0.25	0.25	0.25	0.25	0.25	0.25	0.25	0.25	0.25	0.25	0.25	0.25	0.13
depreciation, (book)			0.00	0.00	0.00	1.88	3.75	3.75	3.75	3.75	3.75	3.75	3.75	3.75	3.75	3.75	3.75	3.75	3.75	3.75	1.88
TOTAL FIXED COSTS			0.00	0.00	0.00	4.52	9.04	9.04	9.04	9.04	9.04	9.04	9.04	9.04	9.04	9.04	9.04	9.04	9.04	9.04	4.52
TOTAL COSTS OF SALES			0.00	0.00	0.00	6.00	12.89	14.36	14.96	14.96	14.96	14.96	14.96	14.96	14.96	14.96	14.96	14.96	14.96	14.96	7.48

Ethanol Selling Price Sensitivity Analysis

The ethanol selling price sensitivity to wood feedstock price, plant capital costs was calculated for both the base case plant (Design Case I) and the 5 million gallon plant (Design Case III) and sensitivity to furfural price for Design Case I, using both sets of economic parameters. The results are shown Tables 5.7 to 5.10 and in graphical form in Figures 5.1 to 5.9.

The purpose of the sensitivity analysis was threefold: firstly, to investigate the effects of factors which could change in response to location, i.e., capital cost and feedstock cost; secondly, in the case of capital cost, to show the effect of cost growth due to process modifications unforseen at this level of development (or cost reduction due to improvements in the technology); and thirdly, to show how the market price of furfural affects the required ethanol selling price.

Ethanol Price Sensitivity Analysis Using SERI Parameters

25 Million Gallon Plant

The economic analysis for Design Case I using SERI parameters shows that with wood chip feedstock at an average price of $42 per dry metric ton, an estimated plant capital cost of $139.79 million and a byproduct furfural price of 15¢ per pound, an ethanol selling price of $1.23 per gallon is required to give a 15% IRR.

Feedstock price shows a strong influence on ethanol selling price, for example, a reduction in average price to $35 per ton results in a 12¢ per gallon reduction in ethanol selling price to $1.10. Increasing the feedstock price to $52 per ton (perhaps due to a longer transportation distance) would necessitate raising the ethanol price to $1.45 per gallon. The average sensitivity of ethanol price to feedstock price is approximately 1¢ per gallon per percent change in feedstock price.

The sensitivity to capital costs for Design Case I using SERI parameters shows an ethanol selling price of 93¢ per gallon for a $100 million capital cost rising to $1.68 per gallon for a $200 million capital cost. Considerable variation in capital cost occurs with location. For example, the difference in capitabl cost between a U.S. Gulf Coast location and a typical mid-west location is $17.69 million. This difference in capital cost translates into a selling price decrease of around 13¢ per gallon for the Gulf Coast location.

The relative effects of feedstock price and capital cost on selling price suggests that there may well be a "trade off" between location and transportation distance. Feedstock at $50 per ton due to extra transportation distance may be acceptable if a capital cost reduction is possible at a more attractive location.

The average sensitivity of selling price to capital cost is approximately 1¢ per gallon per percent change.

5 Million Gallon Plant

Ethanol selling price for the 5 million gallon design case using SERI parameters shows almost the same relative sensitivity to feedstock cost as for the 25 million gallon case. A reduction in the average feedstock cost to $35 per ton results in a selling price of $1.21 per gallon for the ethanol. It may well be possible to obtain feedstock at this price in some locales. An increase in feedstock price to $52 per ton results in an ethanol selling price of $1.62 per gallon. The average sensitivity of ethanol selling price to feedstock cost for the small scale commercial plant is 1¢ per gallon per percent change.

The ethanol selling price shows high sensitivity to the plant capital cost varying from 62¢ per gallon at a capital cost of $50 million to $2.20 at a capital cost of $90 million. As found the 25 million gallon plant capital cost varies considerably with location.

The difference between a U.S. Gulf Coast and a typical mid-west location being $8.4 million translating into an ethanol price difference of around 33¢ per gallon. The average sensitivity is nearly 3¢ per gallon per percent change in capital cost.

Here again, these may well be a beneficial trade off between location and feedstock cost. Expensive feedstock may be acceptable if the location results in capital cost savings.

Table 5.7 Sensitivity Analysis for 25 Million Gallon Plant
(Design Case I)

(a) Ethanol Selling Price Versus Wood Chip Cost
(SERI Parameters)

Wood Chip Cost $/Dry Metric Ton	Ethanol Selling Price $/Gallon at 15% DCFIROR on Equity, Capital Cost - $139.78 Million
35	1.10
40	1.18
42	1.23
44	1.28
47	1.35
52	1.45

Average Sensitivity ¢0.86 Per Gallon Per Percent Change

(b) Ethanol Selling Price Versus Plant Capital Cost
(SERI Parameters)

Plant Capital Cost $MM	Ethanol Selling Price $/Gallon at 15% DCFIROR on Equity, Feedstock $42/Tonne
100	0.93
120	1.10
139.78	1.23
150	1.33
175	1.53
200	1.68

Average Sensitivity ¢1.05 Per Gallon Per Percent Change

Table 5.8 Sensitivity Analysis for 5 Million Gallon Plant
(Design Case III)

(a) Ethanol Selling Price Versus Wood Chip Cost
(SERI Parameters)

Wood Chip Cost $/Dry Metric Ton	Ethanol Selling Price $/Gallon at 15% DCFIROR on Equity, (Capital Cost - $69.76 Million
35	1.21
40	1.37
42	1.42
44	1.43
47	1.47
52	1.62

Average Sensitivity ¢1/01 Per Gallon Per Percent Change

(b) Ethanol Selling Price Versus Plant Capital Cost
(SERI Parameters)

Plant Capital Cost $MM	Ethanol Selling Price at 15% DCFIROR on Equity (Feedstock - $42/Tonne)
50	0.62
60	1.00
70	1.42
80	1.81
90	2.20

Average Sensitivity ¢2.76 Per Gallon Per Percent Change

Figure 5.1 Ethanol Selling Price Versus Feedstock Cost at 15% DCFIROR on Equity 25 Million Gallon Base Case Plant (SERI Parameters)

FIGURE 5.1

ETHANOL SELLING PRICE

VS.

FEEDSTOCK COST

@

15% DCFIROR ON EQUITY

FOR

25 MILLION GALLON

BASE CASE PLANT

(SERI PARAMETERS)

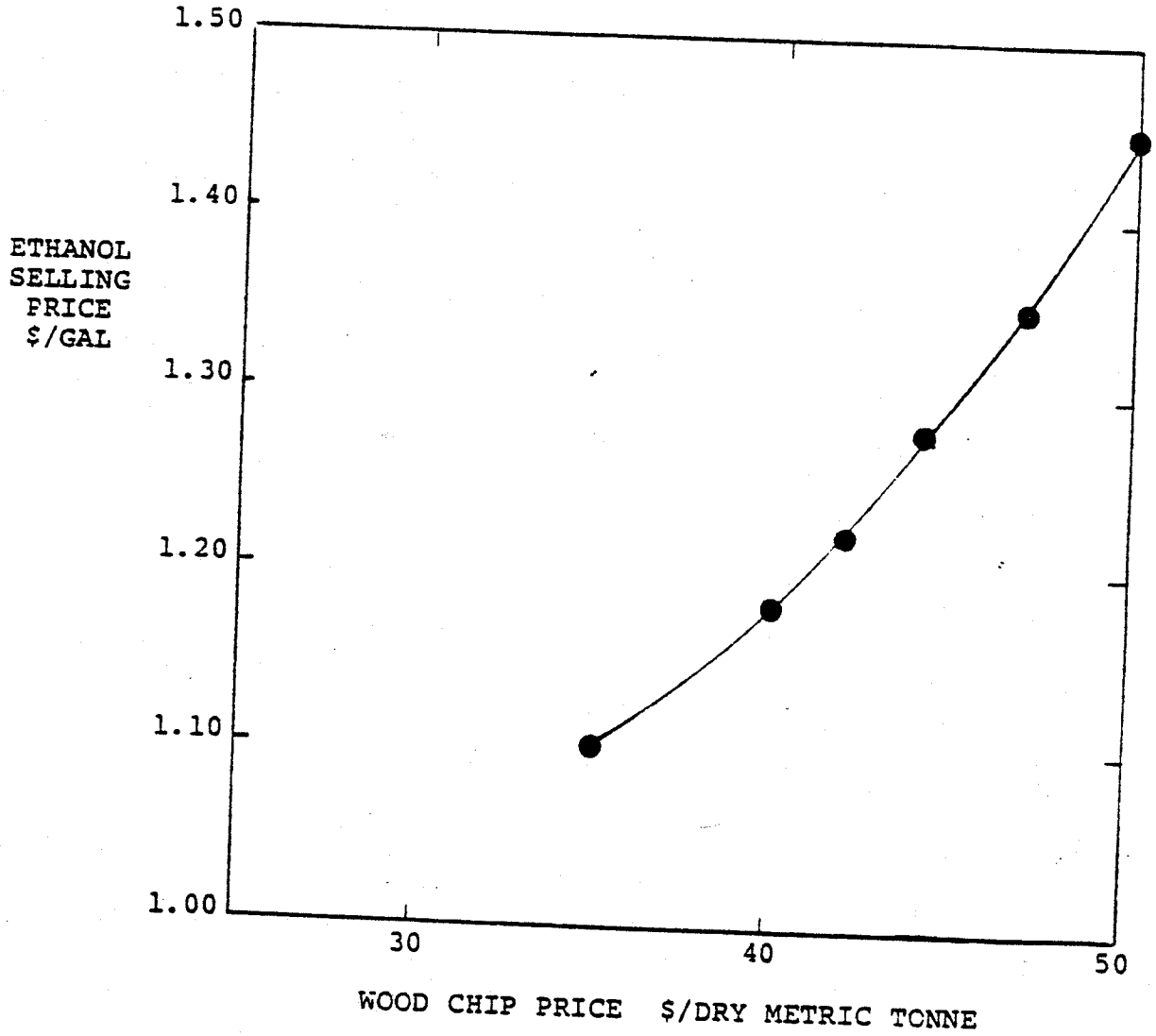

Figure 5.2 Ethanol Selling Price Versus Capital Cost at 15% DCFIROR on Equity for 25 Million Gallon Base Case Plant (SERI Parameters)

FIGURE 5.2

ETHANOL SELLING PRICE

VS.

PLANT CAPITAL COST

@

15% DCFIROR ON EQUITY

FOR

25 MILLION GALLON

BASE CASE PLANT

(SERI PARAMETERS)

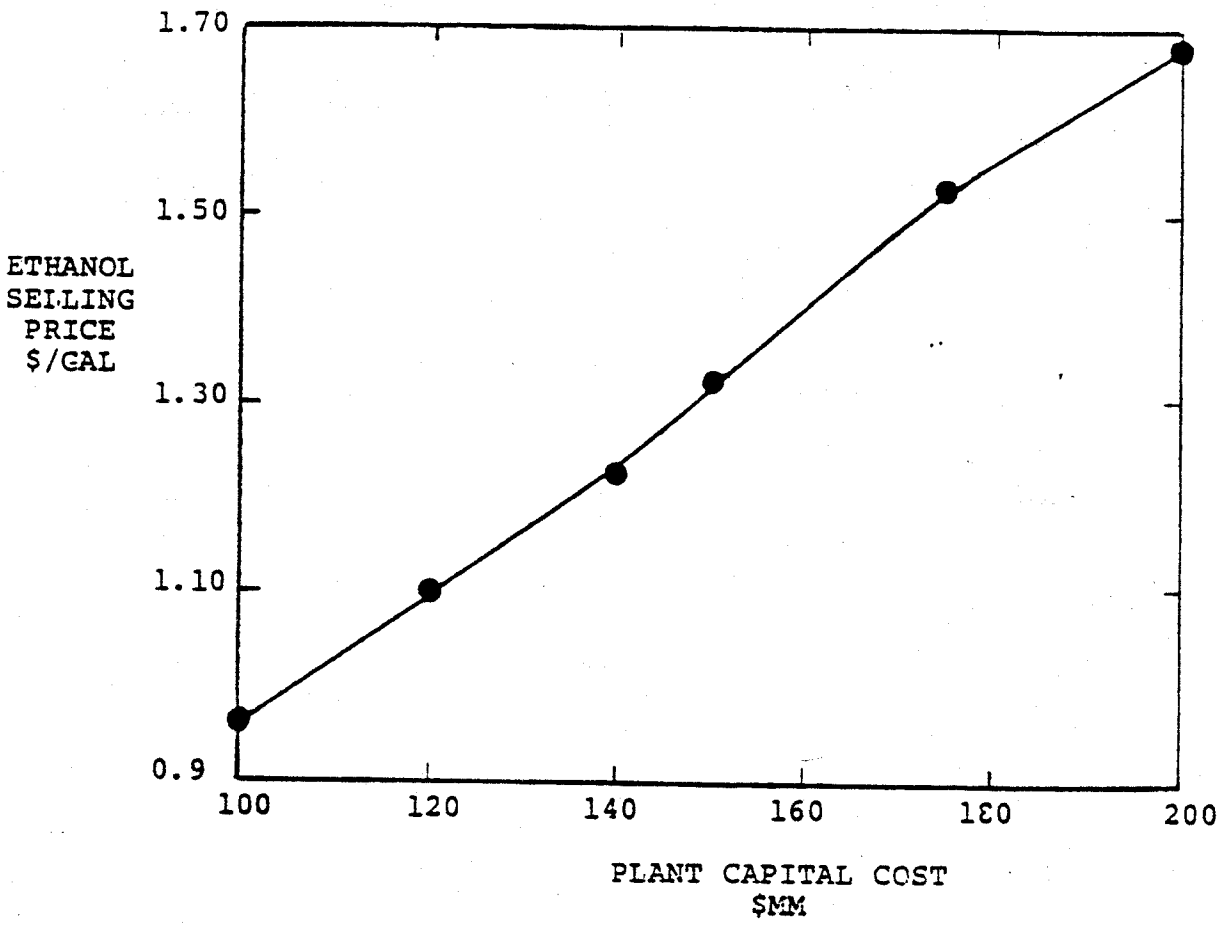

Figure 5.3 Ethanol Selling Price Versus Feedstock Cost at 15% DCFIROR on Equity for 5 Million Gallon Plant Design Case III (SERI Parameters)

FIGURE 5.3

ETHANOL SELLING PRICE

VS.

FEEDSTOCK COST

@

15% DCFIROR ON EQUITY

FOR

5 MILLION GALLON PLANT

DESIGN CASE III

(SERI PARAMETERS)

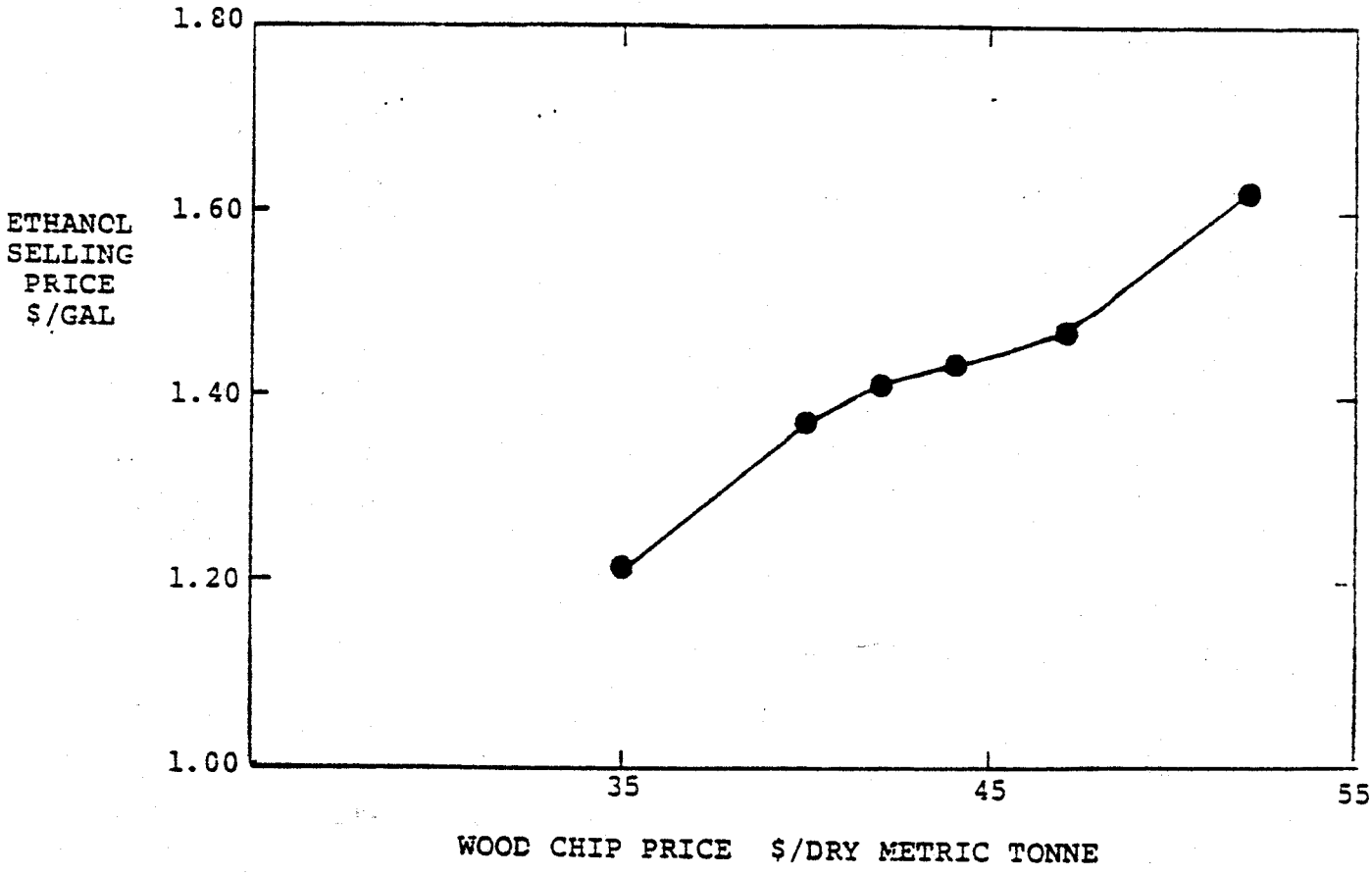

Figure 5.4 Ethanol Selling Price Versus Plant Capital Cost at 15% DCFIROR on Equity for 5 Million Gallon Plant Design Case III (SERI Parameters)

FIGURE 5.4

ETHANOL SELLING PRICE VS. PLANT CAPITAL COST
@ 15% DCFIROR ON EQUITY FOR 5 MILLION GALLON PLANT
DESIGN CASE III (SERI PARAMETERS)

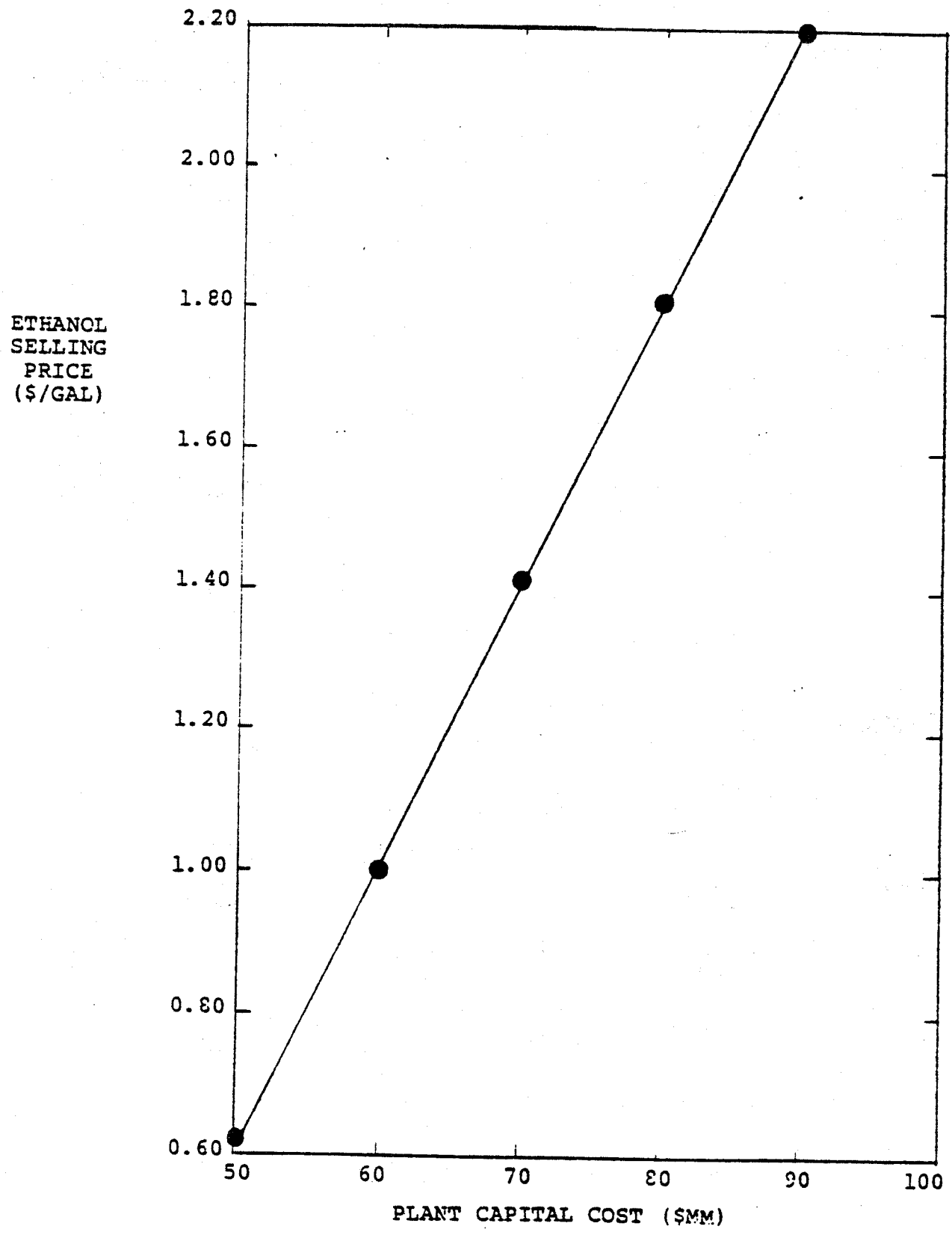

Ethanol Price Sensitivity Analysis Using Badger Parameters

25 Million Gallon Plant

The economic analysis for Design Case I using Badger parameters shows that with wood chip feedstock priced at $42 per dry metric ton, an estimated plant capital cost of $139.78 million and a byproduct furfural price of 15¢ per pound the required ethanol selling price to achieve a 15% IRR is $1.80.

Feedstock price shows a marked influence on ethanol price, for example, if feedstock were available for $35 per dry metric ton then the selling price of ethanol would fall to $1.63 per gallon. If feedstock were priced at $52 per dry metric ton the ethanol price required would be $2 per gallon. The average sensitivity to feedstock cost is 1¢ per gallon per percent change.

The sensitivity of ethanol price to plant capital cost shows that if the plant capital cost were reduced to $100 milion then the required ethanol selling price would be $1.35 per gallon. At a capital cost of $200 million the selling price would be $2.47 per gallon. The average sensitivity over the range investigated is $1.5 per gallon per percent change in capital cost.

5 Million Gallon Plant

Ethanol selling price for the 5 million gallon design case using Badger parameters shows the same relative sensitivity to feedstock price (1¢ per gallon per percent change) as for the 25 million gallon case. Feedstock available for $35 per dry metric ton would allow a selling price of the ethanol of $2.66 per gallon. Feedstock at $52 per dry metric ton would lead to a selling price of $2.92 per metric ton.

The ethanol selling price for this scale of operation is extremely sensitive to capital cost showing an average sensitivity of 4.5¢ per gallon per percent change. At a capital cost of $50 million the selling price is $1.67 and at $80 million the selling price is $3.60. This indicates that a 5 million gallon plant cost overrun can have serious consequences on the plant profitability. Conversely, at this scale cost savings should give a major benefit. Such cost saving could come from a favorable location or elimination of turbogenerator capacity in an area if cheap electric power or from improvements in the process during development.

These figures suggest that there may be an optimum location with regard to feedstock transporation distance and capital cost.

Table 5.9 Sensitivity Analysis for 25 Million Gallon Plant
(Design Case I)

(a) Ethanol Selling Price Versus Wood Chip Cost
(Badger Parameters)

Wood Chip Cost $/Dry Metric Ton	Ethanol Selling Price $/Gallon at 15% DCFIROR on Equity, Capital Cost - $139.78 Million
35	1.63
40	1.75
42	1.80
44	1.84
47	1.90
52	2.00

Average Sensitivity ¢0.91 Per Gallon Per Percent Change

(b) Ethanol Selling Price Versus Plant Capital Cost
(Badger Parameters)

Plant Capital Cost $MM	Ethanol Selling Price $/Gallon at 15% DCFIROR on Equity, (Feedstock $42/Tonne)
100	1.35
120	1.57
139.78	1.80
160	2.01
180	2.23
200	2.47

Average Sensitivity ¢1.56 Per Gallon Per Percent Change

Table 5.10 Sensitivity Analysis for 5 Million Gallon Plant
(Design Case III)

(a) Ethanol Selling Price Versus Wood Chip Cost
(Badger Parameters)

Wood Chip Cost $/Dry Metric Ton	Ethanol Selling Price $/Gallon at 15% DCFIROR on Equity, (Capital Cost - $69.76 Million)
30	2.60
35	2.66
40	2.82
42	2.83
44	2.88
47	2.92

Average Sensitivity ¢0.91 Per Gallon Per Percent Change

(b) Ethanol Selling Price Versus Plant Capital Cost
(Badger Parameters)

Plant Capital Cost $MM	Ethanol Selling Price $/Gallon at 15% DCFIROR on Equity, (Feedstock $42/Tonne)
50	1.75
60	2.33
70	2.83
80	3.50

Average Sensitivity ¢4.5 Per Gallon Per Percent Change

Figure 5.5 Ethanol Price Versus Feedstock Cost Design Case I (Badger Parameters)

FIGURE 5.5

ETHANOL PRICE VS. FEEDSTOCK COST
@ 15% DCFIROR ON EQUITY
FOR 25MM GALLON
BASE CASE PLANT (DESIGN CASE I)
(BADGER PARAMETERS)

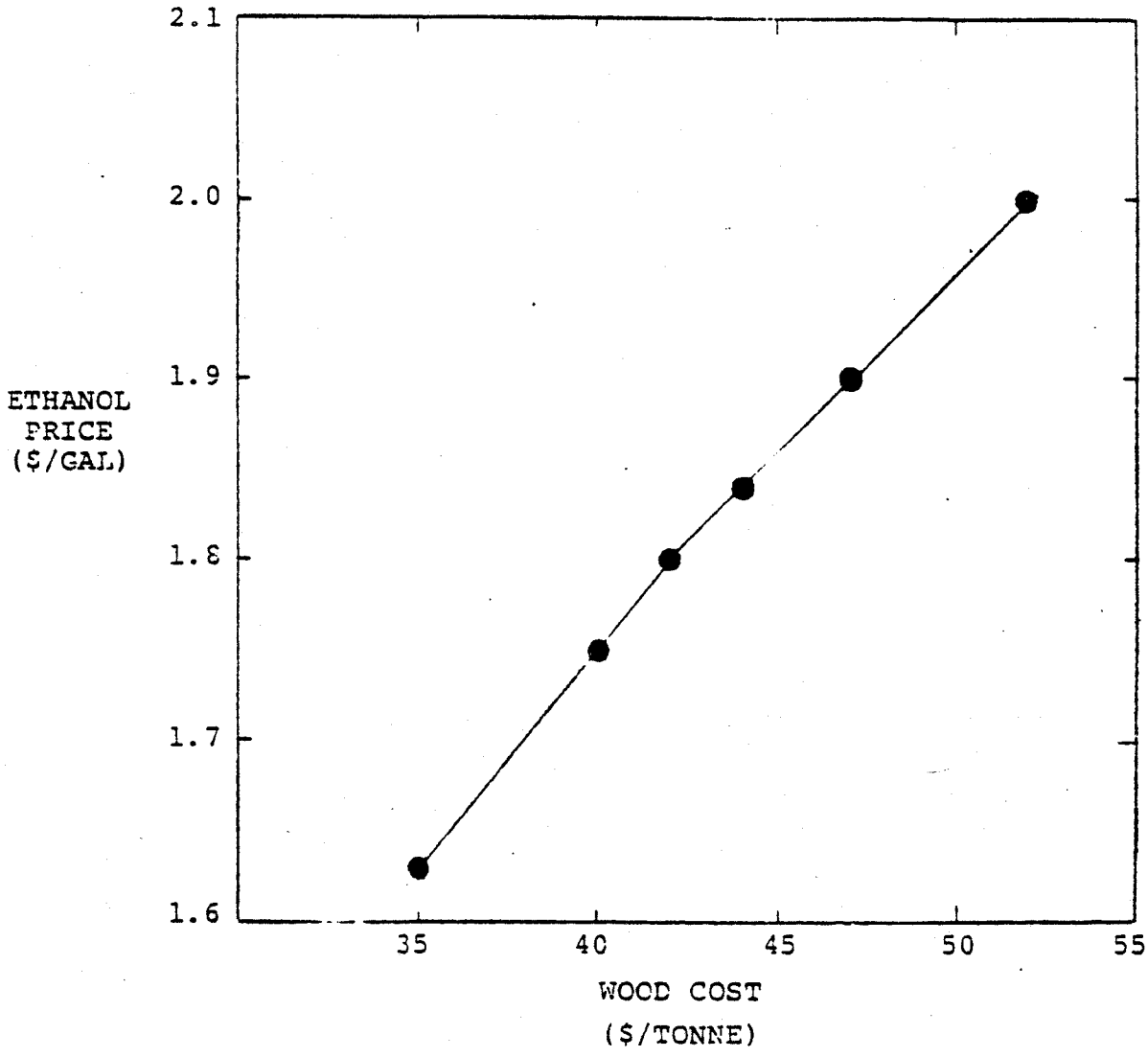

Figure 5.6 Ethanol Price Versus Capital Cost Design Case I
(Badger Parameters)

FIGURE 5.6

ETHANOL PRICE VS. CAPITAL COST
@ 15% DCFIROR ON EQUITY
FOR 25MM GALLON
BASE CASE PLANT (DESIGN CASE I)
(BADGER PARAMETERS)

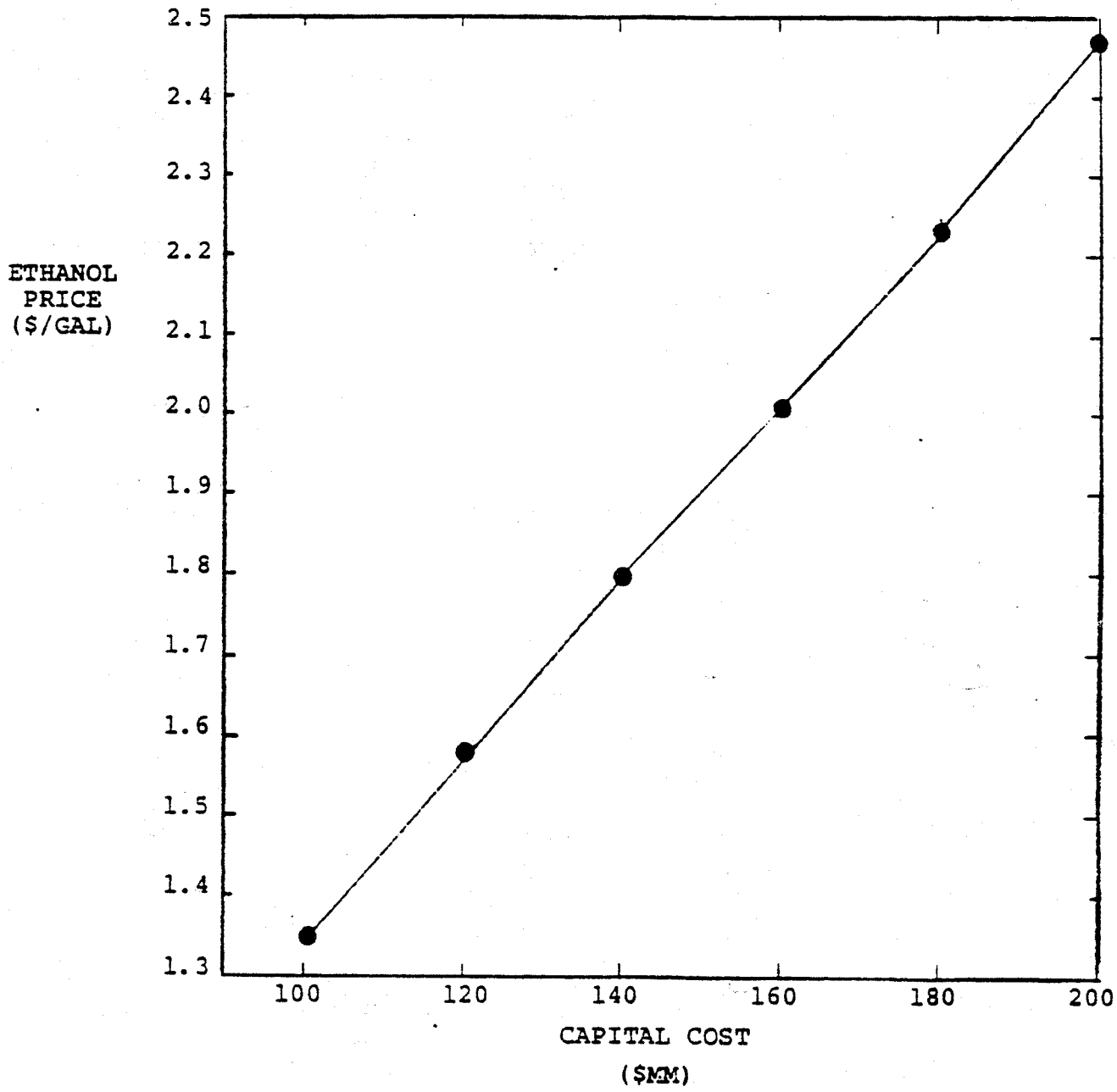

Figure 5.7 Ethanol Price Versus Wood Cost Design Case III
(Badger Parameters)

FIGURE 5.8

ETHANOL PRICE VS. CAPITAL COST
@ 15% DCFIROR ON EQUITY
FOR 5 MM GALLON PLANT
(DESIGN CASE III)
(BADGER PARAMETERS)

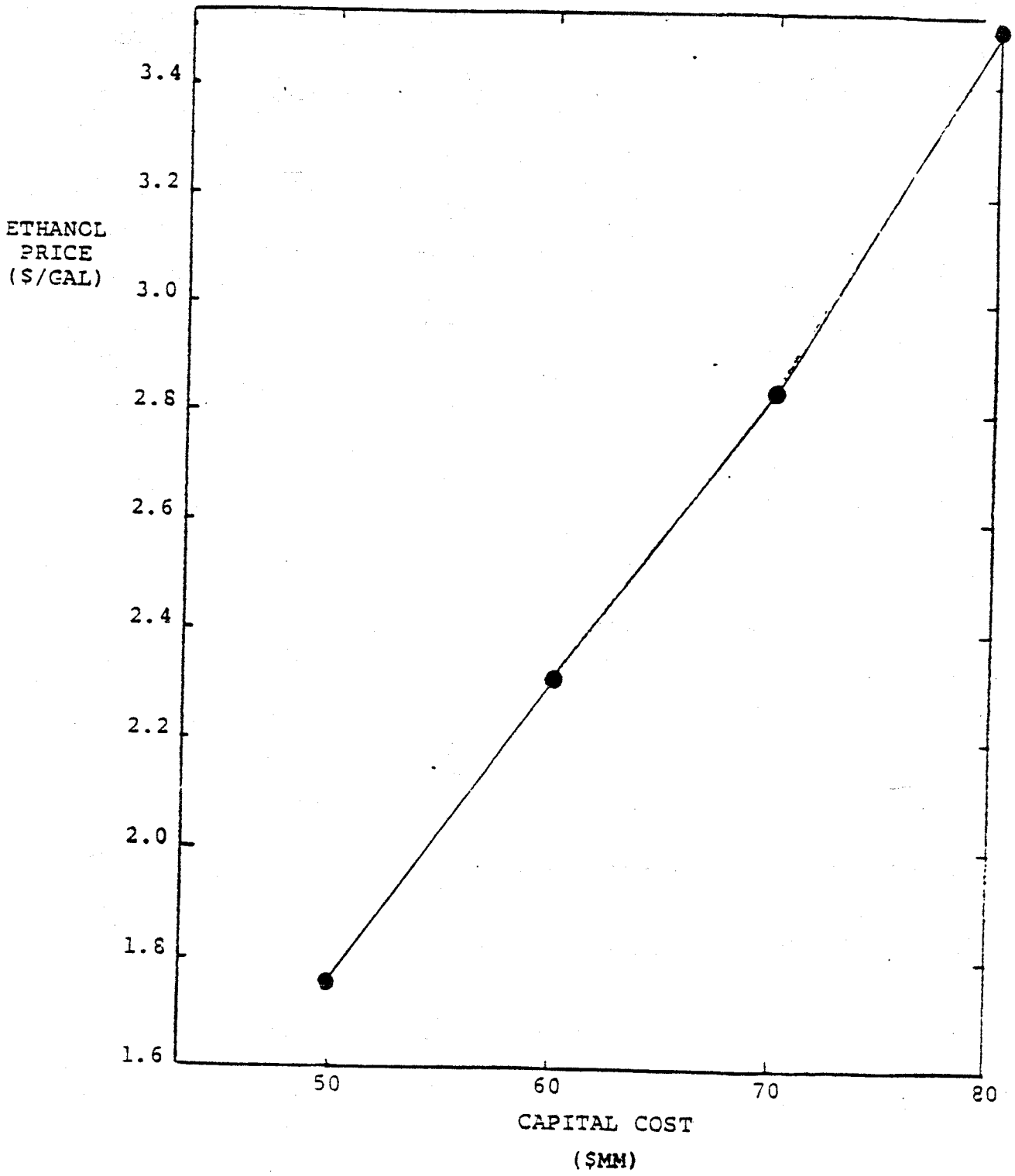

Figure 5.8 Ethanol Price Versus Capital Cost Design Case III
(Badger Parameters)

Sensitivity of Ethanol Selling Price to Furfural Selling Price (Badger and SERI Parameters)

The sensitivity of ethanol selling price to furfural price is given in Table 5.11 and shown in Figure 5.9 for the 25 million gallon plant. The calculation was carried out using both SERI and Badger parameters.

This shows that the selling price of ethanol is very sensitive to furfural market price. The average sensitivity over the range investigated is 0.8¢ per gallon per percent change in furfural price (SERI) and 0.71¢ per gallon per percent change (Badger). If furfural sells at 33¢ per pound the threshold for adipic acid production (see Section 6.0) ethanol can be sold for 0.90¢ per gallon (Badger) and with furfural at 9¢ per pound the threshold for butanol production (see Section 6.0) ethanol must sell for $1.50 per gallon (SERI basis); $2.05 per gallon (Badger basis) to achieve a 15% IRR.

These figures suggest that early large scale plants will be very attractive ventures supplying a medium term furfural market at a price of around 25¢-35¢ per pound.

Table 5.11 Ethanol Selling Price Versus Furfural Price

Furfural Price ¢ Per Pound	Ethanol Price $ Per Gallon	
	SERI	Badger
0.10	1.48	2.05
0.15	1.22	1.80
0.20	1.00	1.55
0.25	0.70	1.32
0.35	--	0.85
Average Sensitivity ¢ Per Gallon per Percent Change	0.80	0.72

Figure 5.9 Ethanol Selling Price Versus Furfural Price for 25 Million Gallon Plant

FIGURE 5.9

ETHANOL SELLING PRICE VERSUS FURFURAL PRICE FOR
25 MILLION GALLON PLANT
(BASE CASE)
@ 15% DCFIROR ON EQUITY

(A)

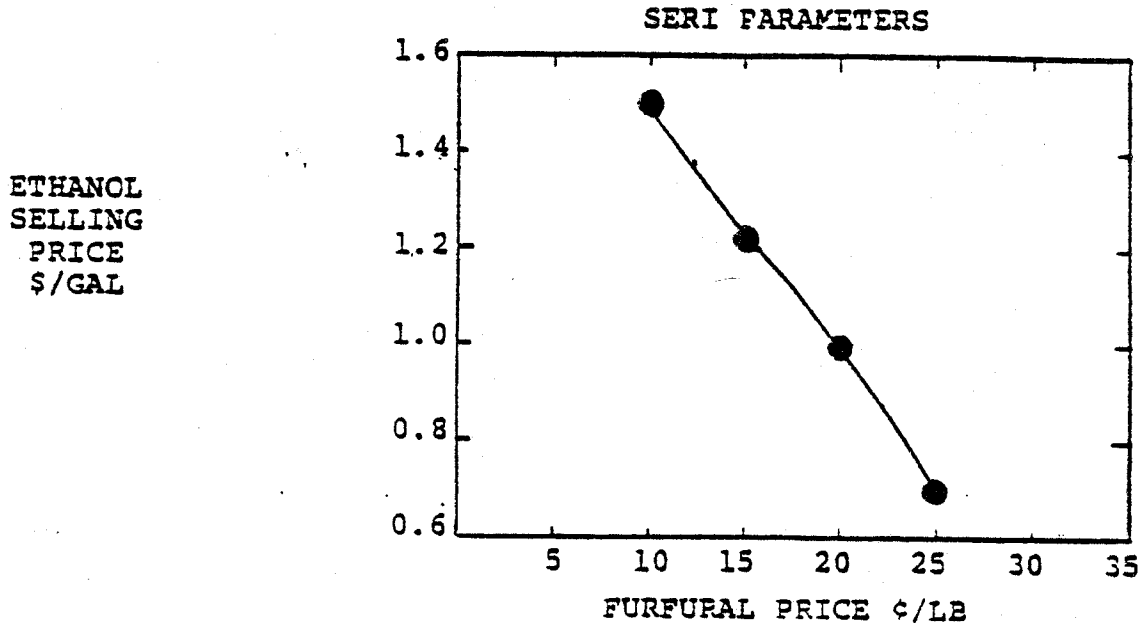

(B)

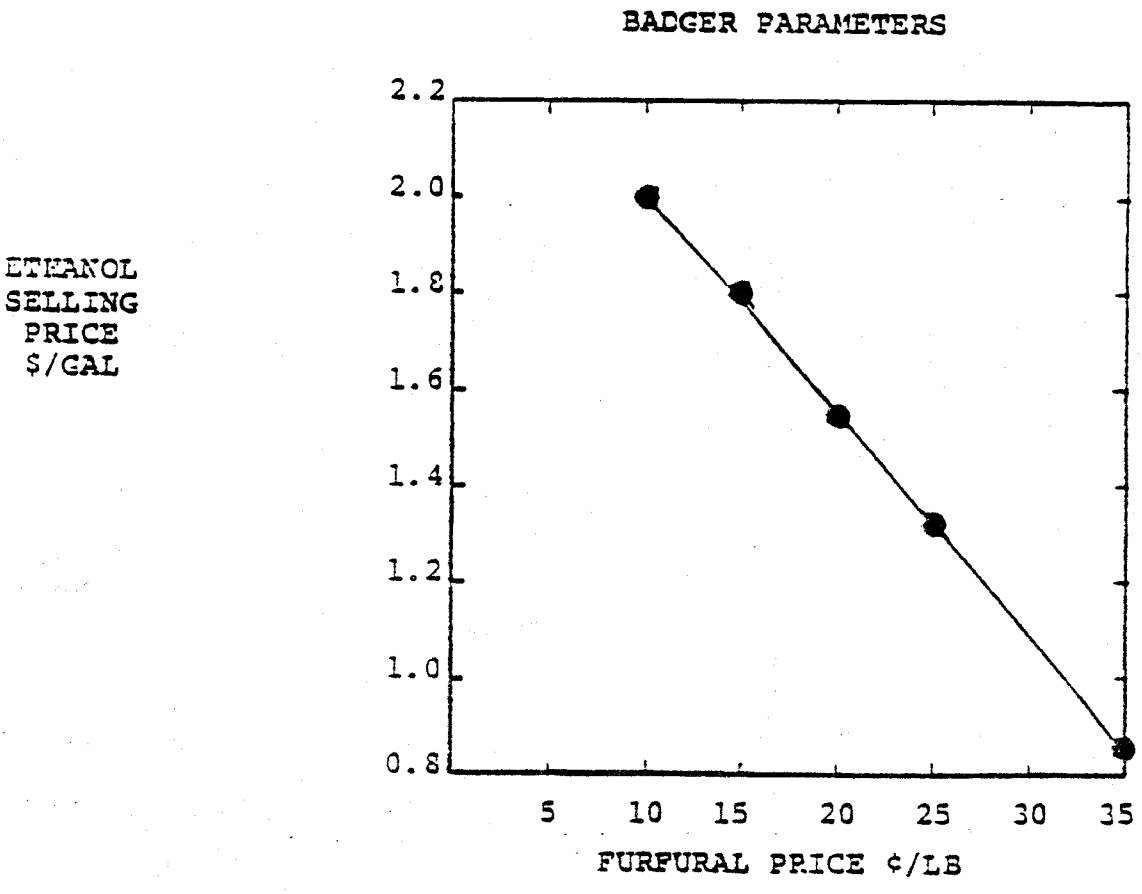

Effect of DCFIROR of Economic Parameters

The relative effect on the IRR of various economic parameters for the base case plant is given for both SERI and Badger parameters on Figure 5.10. The index shown is a relative number and can be used to compare the individual effects. The index is the % change in IRR caused by a % change in parameter.

The calculation is performed by holding all the other variables fixed at their normal value and varying the particular parameter over a reasonable range.

Figure 5.10 for Design Case I (Base Case) shows that the IRR is generally more sensitive in the SERI based calculation than in the Badger calculation. For example, a 1% change in ethanol price gives a 0.25% change in IRR for the SERI care and 0.15% change for the Badger calculation. The major influences on the IRR in both calculations are ethanol price, capital cost, feedstock cost and furfural price. The effects of electricity selling price and inflation are also significant. Percentage equity also has a significant negative effect in the SERI calculation. This is because the IRR calculated using the SERI parameters is higher than the interest rate on debt, giving an advantage to leveraged capital. In the Badger calculation, however, the effect of equity is positive since the calculated IRR is below the interest rate on debt.

The effect of initial working capital in both calculations is not significant over the range investigated. The data used in the sensitivity analyses for both calculations is given in Appendix VI.

The implications of the effects of feedstock cost, capital cost and furfural price on the process economics are discussed earlier in this section.

Figure 5.10 Sensitivity of DCFIROR to SERI and Badger Economic Parameters for 25 Million Gallon Plant (Design Case I)

The assessment of the potential furfural market is based on published information by Chem Systems Inc., SERI, and Mitre Corporation (References 9, 10, and 11). These studies discuss the technology available for conversion of furfural into commodity chemicals such as adipic acid, maleic anhydride, butanol, tetrahydrofuran, and ethylbenzene. The main conclusion is that large markets could exist for furfural should it be available at a price of 35¢ per pound or less. The elasticity of the furfural market, based on the SERI report, is calculated allowing an optimum price/sales volume to be derived. This price is used in the economic assessment.

Technical Risk Assessment

Use of the Dartmouth plug flow reactor to produce fermentable sugars by acid hydrolysis of lignocellulose represents a considerable deviation from past commercial practice where the hydrolysis reaction was carried out in batch (Reference 6) or semicontinuous (Reference 7) mode.

The present process based on the Dartmouth reactor has several areas of major technical uncertainty which may lead to greater than estimated capital cost or lower than expected operating performance in the first generation of commercial-scale plants. The major technical risks identified in the present design study are associated with the following:

- Continuous stable operation of the large-scale 10" diameter plug flow reactor over periods of 200 to 300 hours without plugging and with adequate heat transfer capacity.
- Mixing and pumping an acidified wood slurry of 20% solids consistency.

- The adequacy of grinding the reactor feed solids down to a particle size of "through 20 mesh."
- Maintenance of the fermentable sugar and furfural yield over extended operating periods.
- The fermentability of the hydrolyzate by yeast to give ethanol in acceptable yield.
- Presence in the ethanol of extraneous organics which may prove unacceptable in motor fuel.
- The separation and working of the major solid residue, lignin, from the hydrolyzate.
- The stability of the hydrolyzate sugars produced to process temperatures in the presence of extraneous organics in the hydrolyzate.

These areas of major technical risk are all confined to the hydrolysis unit. The remaining processing units: wood chip handling, fermentation, ethanol and furfural recovery as included in the design, do not represent significant deviations from existing commercial technology and therefore would be expected to work well providing that the hydrolysis unit performs as planned.

The above areas of concern have been addressed in two ways. Firstly, considerable additional development work has been performed at Dartmouth College, Badger's Weymouth Laboratory, equipment vendors' laboratories, and at Japanese Gasoline Corporation's laboratories in Japan. Further experimental development is planned on a scaled-up reactor at the SERI laboratories in the near future. At the time of writing, no details of the SERI system are available. Secondly, extra processing steps have been included where it was felt that these would significantly reduce the degree of uncertainty in the design. The above measures are discussed in the following pages (see also Section 3.0).

(1) Reactor Stability

The operational stability of the reactor was investigated by attempting to operate the Dartmouth reactor stably over an extended period. Operation for 4 to 6 hours without blockage was targeted as a reasonable demonstration, considering the operating constraints of the Dartmouth laboratory such as limited manpower, feedstock storage, effluent disposal, limited reactor velocity, small scale of equipment (½" diameter reactor), rudimentary process controls, and limited steam pressure.

In the test, reasonably stable operation was obtained over a period of approximately two hours before blockage occurred. Although the results of these stability trials reduce to some extent the degree of uncertainty over this issue, reactor stability has not yet been adequately demonstrated and must remain an area of serious technological risk. (A full report of this experimental work is included in Appendix III).

In the present process design an installed spare reactor and feed pump has been included to allow isolation and cleaning of one reactor without affecting the operation of the rest of the plant. Several installed spare reactors and pumps could be included without a major effect on overall capital cost should blockage prove to be a frequent occurrence. However, this practice is obviously limited from an operational point of view (if not from a capital cost point of view). Operation of the new scaled-up version of the Dartmouth reactor at the SERI laboratories should increase the degree of confidence in this aspect of the process.

Improved operational stability may be achieved with a two-stage reaction or by prehydrolysis and removal of pentose sugars prior to the main hydrolysis. This second option may reduce tar formation by exclusion of furfural from the main hydrolysis.

(2) High Consistency Slurry Handling

A wood slurry of 20% solids consistency exhibits very little free water and demonstrates poor flow properties. A prehydrolysis vessel has been included in the design to improve the pumpability of the wood slurry. At the conditions specified for the prehydrolysis (332°F, 1% acidity, 5 minutes residence time) considerable hemicellulose hydrolysis and defibration of the wood has been observed. The resultant slurry has the flow characteristics of a mud. The effect of prehydrolysis is supported with experimental work at Badger's Weymouth Laboratory where small batches of through-20-mesh acidified wood slurry were heated to 332°F for 5 minutes, resulting in a viscous mud. Inclusion of a prehydrolysis step in the process should reduce the concern about slurry handling.

(3) Reactor Feed Particle Size

Although calculations show that particles with a smallest dimension of up to 1000 microns are suitable for use in the hydrolysis reactor, this has not been demonstrated experimentally. Work to date at Dartmouth has used wood flour of 250 micron average diameter.

Reactor feed particle size has a significant bearing on the process economics because of the energy required for grinding and the capital cost of the refiner grinding equipment. Prehydrolysis may relieve the constraints on particle size since it results in considerable breakdown of the wood fibers before they enter the main reactor. Operation of the new scaled-up SERI reactor should establish an upper limit of feed particle size if sufficient prehydrolysis is included in the SERI feed preparation.

(4) Fermentable Sugar and Furfural Yields

Fermentable sugar and furfural yields greater than those assumed in the design basis were obtained in the 2-hour extended reactor operation discussed above. This suggests that the process design basis is conservative and that this issue is of less concern than the other areas. However, operation of the new SERI reactor using larger particle size and more concentrated feeds should establish the expected sustainable yield with greater confidence.

(5) Hydrolyzate Fermentability

The fermentability of hydrolyzates from the Dartmouth reactor has been demonstrated on a small scale by researchers there. This work showed that with a specially adapted common yeast strain, good fermentation yields of over 95% could be expected. The hydrolyzate was prepared by neutralization to pH 10 and reacidification to pH 5 whilst boiling.

In the present process design, hydrolyzate is flashed to remove furfural, the pH is adjusted as above, and, as an additional final step, steam-stripped to remove volatile organics that may be inhibitory. Inclusion of steam stripping as an extra step should increase the degree of confidence in the fermentability over that established by the Dartmouth work. Degradation of fermentable sugars during the stripping still remains uncertain.

The toxicity to the yeast of the residual extraneous organics in the hydrolyzate was tested at Japanese Gasoline Corporation's laboratories in Japan. The tests showed that hydrolyzate prepared using the Dartmouth methods did not contain any compounds acutely toxic to yeast. (A full report of this toxicity trial is given in Appendix II.) They should provide a basis for further work on yeast acclimatization to extraneous hydrolyzate organic components.

(5) Ethanol Product Contaminants

The presence of undesirable contaminants in the fuel-grade ethanol has been investigated by attempting to characterize all the extraneous organic substances produced during the hydrolysis reaction and the fermentation. The ethanol purification system design was based on a feed containing identified extraneous organics. Multicomponent distillation calculations identified acetaldehyde as the only significant contaminant remaining in the product. This conclusion, however, remains to be demonstrated in practice, and the calculations depend on the accuracy of the characterization of extraneous organics produced in the hydrolysis.

Although there are no full published specifications for fuel-grade ethanol, this matter has been discussed with a commercial producer in an attempt to formulate a target specification. Although the tentative conclusion was that the expected impurities were acceptable, significant technical uncertainty remains.

(6) Lignin Separability and Washability

The separability of the lignin/tar solid residue from the hydrolyzate was tested at a vendor's laboratory. These tests showed that the residue could be separated easily using centrifuges. Based on these tests a special type of washing centrifuge has been specified. A high degree of confidence is associated with the design of this step, but the separability and sugar recovery by washing for a continuous large scale system remains to be demonstrated .

(7) Stability of Hydrolyzate Sugars

Work on Dartmouth hydrolyzates at Badger's Weymouth Laboratory showed that the fermentable sugars degraded on prolonged exposure to boiling temperatures of 215°F. On boiling the hydrolyzate for a period of three hours, 100% loss was observed. In the process design, the hydrolyzate is maintained at high temperature for minimimal time. This is an area of uncertainty since yield losses of sugars at shorter exposure times has still to be quantified. A further source of yield loss may be repolymerisation of sugars under acidic conditions and at higher concentrations. This loss also still remains to be quantified.

Quantitative Analysis of Technical Risk

Although measures have been taken to address perceived areas of uncertainty, it is obvious from the above discussion that considerable technical risk is still attached to this new technology. It is desirable therefore to quantify this risk in terms of potential capital cost growth (or extra capital cost required to correct for errors in the design basis assumptions) and performance shortfalls (or the degree to which the new process does not reach expected operational performance).

This risk assessment would give guidance in planning future expenditures and controlling capital cost growth and provide an assessment of operating capacity in the early life of the new process. It would also provide a basis for judging the relative importance of future development work by reducing the level of uncertainty associated with the technology. An estimating contingency has already been applied to the capital estimates, and in the Badger economic analysis a conservative operating capacity schedule has been included; however, contingency is based on the estimating method itself, and the operating schedule is based on general experience with new technology rather than on the nature of the technology itself.

The technical risk assessment is based on a study by Rand Corporation entitled "Understanding Cost Growth and Performance Shortfalls in Pioneer Process Plants," September 1981, R-2569-DOE. This study by Rand was done for the U.S. Department of Energy to identify the factors responsible for cost growth and for failure to meet design performance rates in pioneer process plants. Thirty-four firms in the process industries provided data to support a statistical analysis of the cost growth and performance shortfalls in pioneer plants.

The data base contained information on forty-four commercial-scale process plants build over the past fifteen years in five generic categories (olefins and derivatives, aromatics and derivatives, refinery products, chlorine chemicals, minerals processing).

The Rand Report developed a cost growth model where the relative influence of a set of independent variables was statistically estimated by regression analysis. The result is a linear equation relating cost growth to the effects of process uncertainty, plant complexity, estimate inclusiveness, project definition, and development stage. Cost growth is defined as the ratio of the estimated cost at any particular stage in the project development to the final completed commercial plant cost. External factors such as inflation, scope changes, bad weather, and strikes were removed from the analysis.

Badger does not consider that the Rand methodology should be used to adjust estimates quantitatively in the early stages of development, nor do we consider as inevitable the cost growth predicted by the methodology. We do view the methodology as a powerful tool to measure cost growth <u>risk</u> and, more importantly, as a tool to assist research and development engineers and designers in controlling cost growth and ensuring that plants meet their design production rates.

Badger has applied the Rand Report methodology to the wood acid hydrolysis development project. The first objective was to assess the present situation - the present level of process development and the cost estimate and definition of the commercial plant in the study. The second objective was to predict the reductions in cost growth risk of several courses of action: (1) building and operating a demonstration unit, (2) completing a site-specific study, and (3) doing both. The detailed calculations including the assessment of the independent variables are given in Appendix V.

The elements of a "site-specific" study are outlined in Appendix V.

The results of Badger's calculations are shown below in Table 6.1.

Table 6.1 Likely Capital Cost Growth Risk Associated with Various Development Options

Case	Calculated Cost Growth Ratio	Reduction in Cost Growth Risk
Present Estimate	0.62	--
Building and Operating Demonstration Unit	0.85	0.23
Completing Site-Specific Study	0.81	0.19
Both Demonstration Unit and Site-Specific Study	0.90	0.28

The issue of cost should be addressed from two standpoints. Firstly, before proceeding into a commercial plant design, the cost for the plant should be established as accurately as practical. Secondly, every practical effort should be made to minimize cost growth.

The Badger analysis using the Rand methodology indicates that a cost estimate made subsequent to both the demonstration plant operation and a site-specific study would have much less risk of cost growth associated with it than would be the case without a study. In fact, although the cost growth risk is very sensitive to whether a site-specific study has been made, the results suggest that both the demonstration unit and the site-specific study are necessary. Neither is sufficient alone to reduce the risk of cost growth to a level where a major financial commitment for the first commercial plant can be made with confidence.

A further conclusion of the analysis is that a considerable reduction in cost growth uncertainty (19%) can be achieved by carrying out a site-specific study alone.

Operating Shortfall

Similar Rand methodology was applied to prediction of the risk of plant performance shortfall. Plant performance is also a critical parameter when firms do market planning and when the government hopes that synthetic fuels will relieve the nation's difficulties. For example, in the present process an increase in capacity from 50% to 70% in months 7 to 12 after startup results in a decrease in the required selling price of ethanol from $1.80 to $1.74 per gallon, and an increase in the same operating period to 100% of design capacity results in a selling price reduction to $1.60 (Badger parameters.)

Process development factors influencing performance of the new plant were the number of process steps new in commercial use, the confidence in the heat and material balance figures, difficulty with waste handling and whether or not the plant processes solids.

Badger also applied the Rand methodology to the wood-acid hydrolysis project for performance shortfall. As with the cost growth analysis, the first objective was to assess the present situation and the risk of poor performance associated with the present state of process development. Similarly, the second objective was to investigate reductions in the risk due to several possible courses of action: (1) building and operating the demonstration unit, (2) completing a site specific study, (3) doing both. The detailed calculations are given in Appendix V.

The calculation gives the most likely average production rate as a percentage of plant design capacity in months 7 to 12 after startup.

The results of the calculation are shown in the following Table 6.2.

Table 6.2 Performance Shortfall Risk Associated with Various Development Options

Case	Calculated Expected Performance % of Design Months 7 to 12	Increase In Likely Performance % of Design
Present Estimate	51.4	--
Building and Operating a Demonstration Unit	93.1	41.7
Completing Site-Specific Study	53.4	2
Both Demonstration Unit and Site-Specific Study	97.6	46.2

The above analysis shows that at the present stage of development a commercial plant could reasonably be expected to operate at no more than one-half of design in the 7 to 12 month period after startup.

A design based on demonstration plant data could be expected to result in operation at greater than 90% of design in the same period, and a design based on site-specific information would be expected to permit operation at just over one-half of design for the same period. Finally, a design based on both demonstration unit data and site-specific conditions could reasonably be expected to result in operation at nearly 100% of design. This analysis clearly shows the benefit of building and operating a demonstration unit because it results in a very high degree of confidence in the predicted operating performance. Performing a site-specific study has very little effect on the ability to predict performance.

The Badger analysis using the Rand methodology indicates that an economic analysis made subsequent to both the demonstration plant operation and a site-specific study would have much less risk of cost growth and performance shortfall. Significant reduction in cost growth risk can be attained by performing a site-specific process design study alone; however, this study would not significantly lend confidence to the predicted performance.

Construction and operation of a integrated process demonstration unit containing all the major process sections greatly reduces both cost growth and performance shortfall risks, and it appears to be an indispensible step in the approach to commercialization of this particular technology.

Assessment of the Potential Furfural Market

Data on the potential future market for furfural for various derivatives which can be competitively produced at various furfural prices have been published by SERI (Reference 10). The data are given in the table below. Prices in the table have been calculated for 1984 assuming an average escalation rate of 7% per year.

Furfural Derivative	Furfural Price $/Pound	Total Furfural Demand Metric Ton/Year	Total Revenue $MM
Furfural	0.57	63,492	79.8
Adipic Acid	0.33	517,913	377
Maleic Anhydride	0.12	723,810	192
Butanol	0.09	1,521,088	302

This information is plotted in Figure 6.1.

The price given above is the threshold price of furfural at which production of the derivative using furfural becomes economic. Based on the above figures an optimum furfural selling price of 15¢ per pound can be calculated. At the above price, Figure 6.1 shows that the predicted long term furfural market is around 2 billion pounds per year. This market demand would support the output from fifteen or sixteen large-scale plants each with a capacity of 25 million gallons per year ethanol. Although this represents a limited quantity of ethanol in terms of the gasoline market, it is expected that later generations of the process will have lower capital costs, higher ethanol yields, and better energy usage efficiency as a result of technology advances and operating experience. Furfural could then be sold at a lower price that would lead to increased market volume.

Ultimately furfural could be priced at its fuel value of around 5¢ per pound and burned to produce electric power. In this case, the electric power generated would increase to around 55 MW which is still below the maximum size of 80 MW covered by the PURPA Act. It must be emphasized here, with respect to the question of the furfural market development, that it would be unrealistic to expect an overnight change in the technology base of a number of major chemical industries. The establishment of a major furfural market under normal circumstances would happen gradually over a period of say 10 to 15 years after initial commercialization of the process. The price of furfural would gradually fall as more is produced. This implies that early plants will benefit from a higher furfural price than indicated in the base case economics. The sensitivity analysis of ethanol price to furfural price shows that early large scale processes selling furfural for say 33¢ per pound (the threshold price for adipic acid production) be able to sell ethanol for $0.90 per gallon at 15% DCFIROR.

An unforeseen increase in the price of crude oil with resultant increases in the price of petrochemical feedstocks could alter this scenario and significantly accelerate the growth of the furfural market.

A second long-term possibility is that the fermentability of the pentose sugars to ethanol could be improved. This would, of course, remove the dependency of the process economics on limited byproduct markets. In this case a two-stage hydrolysis system would be required to remove pentose sugars prior to the main hydrolysis.

Figure 6.1 Projected Furfural Market Revenues Versus Selling Price (Reference 10)

FIG. 6.1 – PROJECTED FURFURAL REVENUES VS. SELLING PRICE

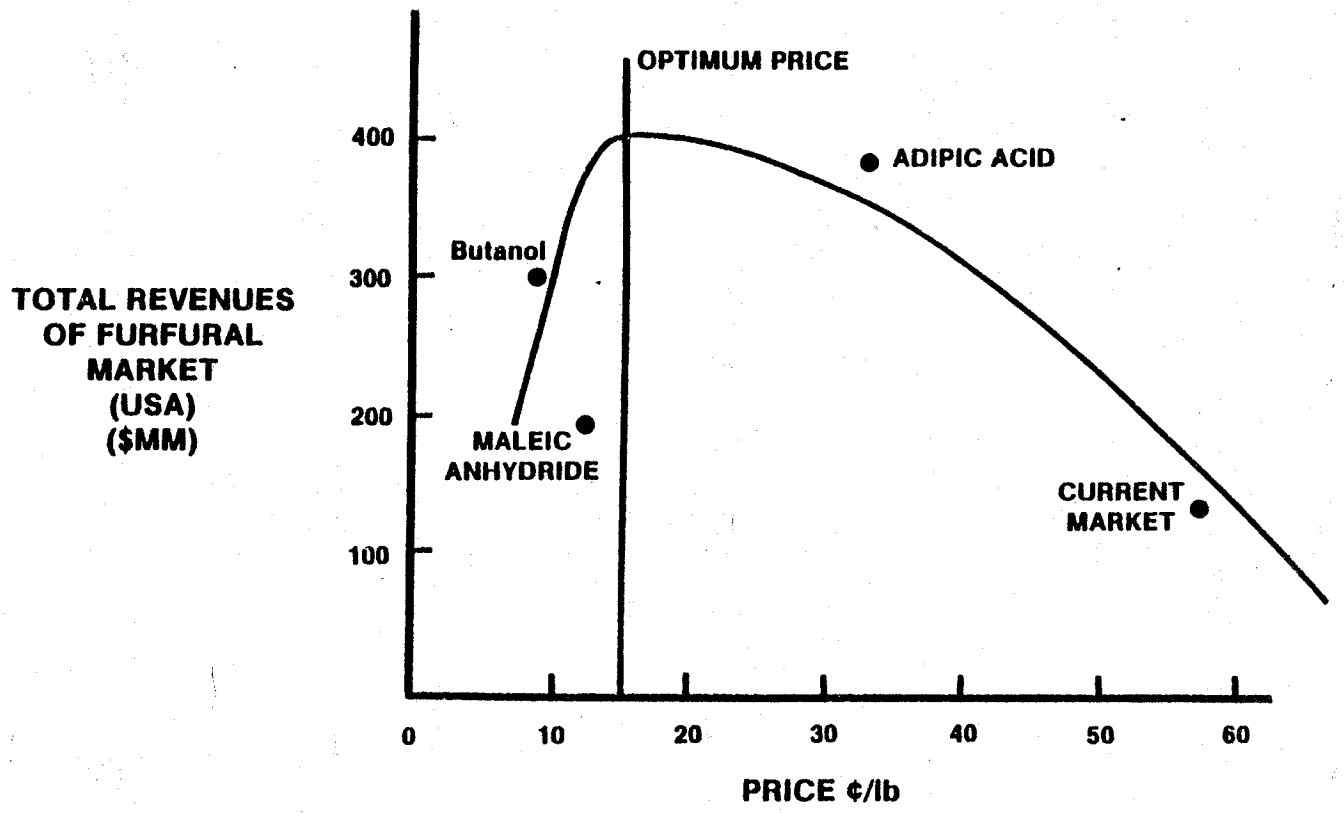

References

1. Kwarteng, I.K., PhD Thesis, Dartmouth College, July 1983.

2. Grethlein, H.E. and Converse, A.O., International Symposium on Ethanol from Biomass; Winnipeg, Canada, October 1982.

3. Smuk, J.M., PhD Thesis, University of Wisconsin, 1960.

4. Hajny, G.J., Forest Products Journal, May 1959, page 153.

5. Leonard, R.H., et al., Industrial and Engineering Chemicals, 37, 4, 390.

6. Langlykke, A.F., et al., Industrial and Engineering Chemistry, 40, 9, 1716.

7. Harris, E.E., et al., USDA FPL Number R1618, June 1946, Fermentation of Douglas-Fir Hydrolyzate by S. Cerevisiae.

8. Grethlein, H.E., "Summary Report on Preparation of Large Samples of Hydrolysate for Badger," June 1984 (see Appendix III).

9. Chem Systems, Inc., Process Evaluation and Research Planning Publications - Furfural An Old Chemical With A Possible New Horizon, (82 Q4).

10. Power, A., et al., SERI Publication SERI/TR-231-2000, August 1983: The Value of Furfural/Ethanol Coproduction from Acid Hydrolysis Processes.

11. Johnson, R.C., et al., 1983 Mitre Corporation Report Number MTR-83 W202, McClean, VA, Volume II for NSF.

12. Sudhoff, B., et al., German Chemical Engineering, 24-43, V51, V, 1982.

13. Wright, J.D., SERI Study Document TR-231-1714, April 1983.

14. JPR Associates, Study Commissioned by Burlington Electric Department, February 12, 1980.

15. Hiser, M.L., Wood Energy, Proceedings of Conference, Ann Arbour Science Publications, November 1977.

16. Nystrom, J.M., et al., Chemical Engineering Progress, May 1984, pages 68-74.

17. Jones, J.L, et al., SRI International Publications, Presented at 1982 Annual Meeting AIChE, November 1982.

18. Miller, R.D., Tresource, Inc., Ellenville, New York, Personal Communication, October 1983.

19. Glover, W., Bioburn, Inc., Utica, New York, Personal Communication, October 1983.

20. Chemical Marketing Reporter, August 27, 1984.

21. Public Law 95-617, November 9, 1978, Public Utility Regulatory Policies Act 16-USC 2601.

22. Wentworth, D., NYSERDA, Personal Communication, October 1983.

23. Brainard, J., New York State Public Service Commission, Personal Communication, October 1983.

24. Bartel, C., Planning Engineers' Report for State of Vermont, Department of Public Service, June 21, 1983, Montpelier, Vermont.

25. Grethlein, H.E., Personal Communication, Minutes of Meeting Number 9, February 16, 1984.

26. Grethlein, H.E. and Converse, A.O., et.al., Second Annual Report (Subcontract XB-9-8354-1), March 1981.

27. Sideman, S., et al., AIChE Journal, Volume II, Number 6, page 1019, 1965.

28. Silversides, C.R., Pulp and Paper, Canada, Volume 82, Number 3, page 57, 1981.

29. U.S. Master Tax Guide - Section 1165D, ACRS Depreciation; Section 1178A, Investment Tax Credits; Section 1183A, Business Energy Credits.

30. Merrow, E.W., et al., Understanding Cost Growth and Performance Shortfalls in Pioneer Process Plants, Rand Corporation Report R-2569-DOE, Prepared for the U.S. Department of Energy, September 1981.

31. Wilke, C., et al., AlChE. Jouirnal, December 1963, p 69.

32. Grethlein, H.E., and Lynd, L.R., Patient Application No. 525102, August 22, 1983.

Yeast Hydrolyzate Toxicity Trial

Report on work carried out under unsolicited proposal change order number 1 modification to Subcontract number ZX-3-03096-2.

A critical area of uncertainty in the acid based wood to ethanol technology is the fermentability of the hydrolyzate. Wood acid hydrolyzates have in the past been fermented to alcohol in high yield (Reference 5). Hydrolyzate from the Dartmouth reactor has been shown to be fermentable in yields of 97% using common yeast strains adapted to the hydrolyzate (Reference 26). Adaptation of the yeast is of course only possible providing the hydrolyzate contains no extraneous organics acutely toxic to the yeast. It has been found by Dartmouth researchers and others that over-neutralization of the acid hydrolyzate to pH 10 with lime and reacidification to a "near neutral pH (say 5) while boiling at a temperature of 212°F precipitated out toxic extraneous organics and resulted in a hydrolyzate mixture to which the yeast could be acclimatized. It was the intent of this work to show that the acid hydrolyzate preparation scheme proposed in the process removed the acutely toxic organics from the raw hydrolyzate and to show that the yeast strains used by the Japanese designers of the fermentation system could survive exposure to the prepared hydrolyzate. It was also intended to show that the yeast entrapment polymer suffered no corrosion or degredation in the hydrolyzate. The scope of work was therefore:

(1) To produce 20 liters of raw hydrolyzate from the Darmouth reactor.

(2) To prepare this by neutralization to pH 10 and reacidification to pH 5 while boiling.

(3) To separate out the lignin/tar residual solids by centrifugation.

(4) To concentrate the hydrolyzate stream to 6.5 percent by weight fermentable sugars by boiling off excess water. (This step was also intended to replace the steam stripping step used in the process.)

(5) To package one liter of the hydrolyzate and transport it to Japan. The hydrolyzate was acidified to pH 2 to preserve it during shipment. It was neutralized before toxicity trials were carried out.

(6) To test the exposure of yeast and the entrapping polymer to the hydrolyzate at the JGC/Kansai Paint laboratories in Japan.

Results

(1) 22 liters of Dartmouth hydrolyzate were produced in a single operating campaign at 240°F, 1.2% acidity and 8.24 seconds residence time. The fermentable sugar yield was 50% of theoretical the furfural yield was 84.5% of theoretical on pentose sugar.

(2) Hydrolyzate was pH adjusted while boiling. The procedure took 1½ hours.

(3) The hydrolyzate was then concentrated by boiling of excess water. Vapors were condensed and collected for analysis. The sugar concentration was monitored during evaporation by carrying out DNS reducing sugar analysis. The procedure took 3 hours.

(4) The final sugar concentration was found by glucose oxidase and by liquid chromatograph (HPLC) to be zero (even though the DNS test indicated a level of 6.5%).

(5) On confirmation of zero sugar by a second HPLC analysis it was concluded that the reducing sugars had degraded on prolonged boiling in the presence of extraneous organics.

(6) It was decided to add glucose to the hydrolyzate and transmit the "spiked" samples to Japan to complete the trial. It was felt that this would still be a useful and conservative test since the hydrolyzate now contained not only extraneous organics from the original hydrolysis but also extraneous organics produced on degredation of the reducing sugars. Reducing sugar content of the "spiked" hydrolyzate was confirmed twice by HPLC at MIT and Dartmouth (by Professor Grethlein); and by glucose oxidose test.

(7) Results of the Japanese tests showed that the yeast survived exposure to the reneutralized hydrolyzate at pH 5.2 and that the polymer beads suffered no damage on exposure to the hydrolyzate. No fermentation activity was observed as would be expected on first exposure of the yeast.

Attachments

(1) Analysis of raw Dartmouth hydrolyzate for fermentability trial.

(2) Analysis of concentrated hydrolyzate sent to Japan.

(3) Telex from Japan stating results of test.

Summary Table of Acid Hydrolysis Runs on Mixed Harwood

(90% Birch 10% Maple)

Reactor Temp.* °C	Acid wt.%	Time Seconds	Reactor Feed Solids mg/ml	Steam Effluent Dilution ml In/ ml Out	Reactor Factor Solids mg/ml	Potential Sugars Glucose mg/ml	Potential Sugars Xylose mg/ml	Hydrolyzate Sugars Glucos mg/ml	Hydrolyzate Sugars Xylose mg/ml	% Yield GLU	% Yield XYL
230	1.05	8.11	90.4	.638	25.2	25.1	12.9	8.65	9.52	34.5	73.8
230	1.57	8.23	90.4	.638	22.8	25.1	12.9	11.85	6.78	47.2	52.6
239	1.05	8.20	90.4	.622	20.2	24.5	12.6	13.22	5.85	54.0	46.4
239	1.51	8.03	90.4	.622	14.4	24.5	12.6	13.61	4.53	55.5	35.9
247	.86	7.66	90.4	.609	10.8	23.9	12.3	12.18	3.12	51.0	25.4
247	1.37	7.97	90.4	.609	9.47	23.9	12.3	11.83	2.61	49.5	21.2
Analysis of 22L Batch											
240*	1.23	8.24	102.3	.621	--	27.7	14.2	13.99	6.99	50.5	49.2

Actual reactor temperature is 2°C greater than wall temperature.

This is the condition for 22 liter sample for Badger:

Potential Glucose 43.55 mg/100 mg dry wood.
Potential Xylose 22.4 mg/100 mg dry wood.

Summary Table of Hydrolyzate Analysis on HPLC

Sugar Concentration in mg/ml

Sample		Cellobiose	Glucose	Xylose	Galactose	Arabinose	Mannose	HMF	Furfural
230°	1.05%	0.12	8.65	9.52	Trace	.70	1.33	.66	2.29
230°	1.57%	0.13	11.85	6.78	Trace	.38	1.04	1.19	3.72
239°	1.05%	0.12	13.22	5.85	Trace	.41	.98	1.32	3.93
239°	1.51%	0.12	13.61	4.53	Trace	.34	.89	2.01	5.02
247°	.86%	0.06	12.18	3.12	Trace	.36	.81	2.75	5.70
247°	1.37%	0.06	11.83	2.62	Trace	.34	.73	2.77	6.81
240°*	1.23	0.19	13.99	6.99	Trace	.44	1.07	1.53	3.94

*22L Sample Analysis

Dilution Factor F = Ml Feed/ml Reactor Effluent

$$F = 1.0355 - 1.713 \times 10^{3}T$$

where T = Reactor temperature in °C and is equal to reactor wall temperature measured on thermocouple +2° correction factor to get reactor temperature.

Wall Temperature °C		
230	T = 232	F = .638
239	241	.622
247	249	.609
240	242	.621

R183
BY-GT1 0454 EST 04/13/84

*174174BADGER CAM

JGC CORP TOKYO APR 13 1984

BADGER CAMBRIDGE

FOR MR HV KERSHAW
RE: YOUR APR 12 TELEX (FERMENTABILITY TRIAL)
WE SHOW BELOW THE RESULTS OF OUR FERMENTABILITY TEST
ON THE WOOD HYDROLYSATE SUPPLIED FROM YOU.
STRAIN USED: YEAST SUITABLE FOR MOLASSES FERMENTATION,
POSSESSED BY JGC.
TEST CONDITIONS AND RESULTS:
(1) WOOD HYDROLYSATE (PH 1.7) WITH NO PH
ADJUSTMENTS: ALL YEAST PERISHED.
(2) WOOD HYDROLYSATE WITH PH ADJUSTED TO 5.2 (WITH
CAUSTIC SODA) AND ADDITION OF AMMONIUM SULFATE
AND YEAST EXTRACT: YEAST REMWINED ALIVE BUT
NO PROLIFERATION OR FERMENTATION OCCURRED.
THUS, OUR SIMPLE TEST INDICATES THAT OUR YEAST DEVELOPED
FOR MOLASSES FERMENTATION DOES NOT ALLOW ALCOHOL
FERMENTABILITY FOR THE WOOD HYDROLYSATE. WE SUSPECT
THE INFLUENCE OF BY-PRODUCTS CONTAINED IN RAW MATERIALS.
WE SEE A NEED TO STUDY PREPARATORY CONDITIONS OF MEDIUM
AS WELL AS TO LOOK FOR ANOTHER STRAIN SUITABLE
FOR WOOD HYDROLYSATE.
HAVE YOU OBTAINED ANY KNOWLEDGE ABOUT STRAINS FOR
WOOD HYDROLYSATE FERMENTATION? WE WOULD LIKE TO
HEAR YOUR COMMENTS ON OUR TEST RESULTS BEFORE STUDYING
FURTHER ACTIONS.
REGARDS
SHOGO NOJIMA

...

*174174BADGER CAM

0455 04/13
VIA TRT

THEY DISC.

ELAPSED TIME 00:03:33

PRINTED AT 0458 EST 04/13/84

Dartmouth Reactor Extended Operation Trial

Introduction

Seventy gallons of hydrolyzate were required to carry out hydroclone and centrifuge testing under Change Order No. 2 to subcontract ZX-3-03096-2. It was decided to produce as much as possible of this in one continuous campaign and to take the opportunity to investigate the stability of the Dartmouth reactor over an extended period of operation. This would also provide the opportunity to confirm that consistently high yields of fermentable sugars were possible over an extended operating campaign. Three attempts to operate the reactor in such a manner were made. The first two were unsuccessful due to blockage problems. (See attached report from R.D. Sexton who witnessed the May 24 and June 15 trials on behalf of Badger.) The third attempt was reasonably successful resulting in two consecutive campaigns each of 2 hours in duration. The first two campaigns were terminated due to severe blockage of the exit orifice and condenser. The third, with a cyclone vapor separator on the reactor outlet, gave good stability over the 2 hours of operation but exhibited increasing tar deposition at the separator liquid outlet. 90 gallons of hydrolyzate were produced: approximately 45 from the first and second campaigns, and 45 from the third. These were stored and shipped in drums A and B respectively. Fermentable sugar yields were 53.4% and 58.5% respectively. Furfural yield obtained from the first campaign was 50% on xylose or 78.8% of theoretical. A report of the two campaigns is given in the attached communication from Professor H.E. Grethlein, Dartmouth College.

Attachments

(1) Report on first hydrolyzate production trial by R.D. Sexton.

(2) Report on second campaign by R.D. Sexton.

(3) Report on second and third campaign trials by Professor H.E. Grethlein, Dartmouth College.

cc: H.S. Klein

BADGER ENGINEERS, INC.

MEMORANDUM

July 3, 1984

TO: S.W. Fitzpatrick

FROM R.D. Sexton

SUBJECT: Badger Job No. E-0461, SERI
Hydrolyzate Production For Hydroclone Trials
Trip Report For 24 & 25 May 1984 - Visit To Dartmouth

Introduction

The purpose of the visit was to witness the production of hydrolyzate for Badger's subsequent use in vendor testing of hydroclones. Prof. Alvin Converse of Dartmouth's Thayer School of Engineering had overall responsibility for the project but delegated to lab technician Hermann Ertl the immediate responsibility for setting up, running and controlling the production runs because of his prior experience with building and running the equipment. During this visit, no material of sufficient quality was produced but much was learned about the operating methods used for the Dartmouth process and their effects on long term (i.e, more than 10 minutes) operation.

Day 1-24 May

8:30 a.m.-Ran the system with steam and water only and tightened all leaking fittings except for possible leak hidden under insulation of steam line. This could, however, just be wet insulation steaming off as it is heated up.
9:00 a.m.-At desired flow rates (still just water and steam) could not get average reactor temperature above 250°C (range was 247 to 252, cycling back and forth). Steam safety valve on boiler was lifting at 800 psi, a deviation from previous experience. Valve had been set to lift at 800 psi but was lifting at 850 in actual operation until now. Valve had been removed, cleaned, and reinstalled just prior to my visit and now works much better.
9:15 a.m.-Another orifice assembly (see Appendix I) was installed but pressure drop was too high and it restricted the steam flow so that reactor wall temperature was only 245°C at 720 psi.
10:30 a.m.- Changed leaking drain valve and installed another orifice-same result; tried adjusting orifice-temperature still at 245°C.
11:00 a.m.- Tried a less efficient orifice, got steady 251°C wall temperature but reactor pressure was 600 psi and therefore the steam was not condensing in the reactor.
11:30 a.m.- Tried another orifice assembly, got 250°C outside wall temperature. (therefore about 252°C inside according to Ertl) at 660 psi. This was satisfactory to start slurry feed.
11:35 a.m.- Started slurry feed. Residence time was 7 seconds, acid concentration was 1 percent, reactor O.D. was 13.mm. Slurry was 10. weight percent Wilner 170 hardwood mixed with water with a Charles Ross & Son mixer in 10 liter batches (i.e., 10. liters of water with one kilogram of wood). Wilner 170 (Wilner Wood Products, Norway, ME 04268) was used instead of Wilner 060 as had been used in

the past because there wasn't enough 060 on hand to make the desired 100. gallons of hydrolyzate. The only difference between the two Wilner products is particle size distribution, with 170 being coarser. This particular wood flour had been stored at Dartmouth for one year and had an assumed moisture content of 7 wt. percent per Ertl. After mixing 7 to 10 minutes and allowing to stand for three minutes the settled proportions (by volume) were 30 percent foam in a layer at the top, 30 percent liquid containing some suspended solids in the middle layer, and 40 percent solids settled at the bottom.

11:37 a.m.- Reactor temperature flucutating between 250 and 253°C, pressure between 670 and 680 psig. Collected sample No. 1 to test settleability-settled at same rate as hydrolyzate sample that I had brought with me. This hydrolyzate sample had been made by Dartmouth for Badger earlier this year.

11:40 a.m.- RXR temp. 246-248°C. According to Ertl this cooler wall temperature is because of coking on the inside wall.

11:46 a.m.- RXR tem. 243-245°C, RXR press. 700 psig. Collected sample No. 2-contained much more solid material than sample No. 1 and most of the solids floated.

11:48 a.m.- 238°C 710 psi-plugging evident so shutdown. I saved, intact, a portion of the material plugging the reactor. It contained some unreacted wood because the acid was shutoff before the flow of slurry was stopped.

3:30 p.m.- Reassembled and started up on water and steam. Temperature 240-250°C, fluctuating. Shutdown and disassembled steam mixer. Took out small amount of crud and turned mixer around when reinstalled. Mixer is symmetrical so this is ok to do.

4:00 p.m.- 251-255°C, 700 psi on water and steam, so started very dilute slurry feed.

4:15 p.m.- Temperature fell to 213-240°C, 700 psi; stopped slurry and went back to water feed only. Stayed steady at 228-230°C but steam valve is now wide open so this is the highest achievable temperature. Ertl noticed a raspy vibration in the steam injector that had never happened before.

4:30 p.m.- Shutdown. Ertl will clean steam injector overnight in a heated cleaning solution. I scraped and kept samples of tar from orifice assembly.

Day 2-25 May

Also present today was Michael Karpuk of SERI

Ertl reinstalled the steam injector and ran the system on steam and water. There was still the problem of temperature cycling: 240-250°C, 230-240°C, but 200-203°C. Ertl said raspy vibration noise from injector is much different than when it was new. The injector is made of solid zirconium, machined at Dartmouth but welded at Teledyne/WAH. It cannot be opened for inspection. Zirconium is corrosion resistant but is not erosion resistant. If the mixer is eroded it may no longer be condensing the steam properly. See Appendix II for zirconium steam injector construction details.

Erosion caused the old style steam injector to fail also. This was the multi-hole assembly made of 316SS. I borrowed this old assembly to take back to Badger for inspection and it will be returned to Dartmouth.

The steam control valve was on pressure control. The cycling time for the reactor temperature was 15 seconds. We noted that the boiler's control cycle was also 15 seconds with the boiler pressure operating in a range from 780 to 810 psig. We attempted to retune the pressure controller to make the reactor temperature steady. After retuning we still had cycling: 248-253°C at 660 psi; 208-210° at 350 psi; 164-166°C at 170 psi.

BADGER ENGINEERS, INC.

Ertl noted that when the boiler operated at a higher pressure the steam condensed better and the system was more stable. With Prof. Converse's permission we removed the safety valve from the boiler at 1:00 p.m. The boiler had recently been hydrotested to 2700 psig and test-operated at 1500 psig in preparation for obtaining a higher boiler pressure rating. A new safety valve will take 12 to 16 weeks to be delivered.

1:25 p.m.-Started system again on water and steam with a smaller orifice assembly. RXR temperature was 247.8-250.0°C at 750 psig.
1:30 p.m.-Started dilute surry feed at RXR temperature 245-253°C at 700 psig.
1:35 p.m.-850 psig; collected sample No.-1
1:39 p.m.-248°C, 900. psig
1:40 p.m.-940 psig
1:46 p.m.-238°C, 1100 psig; switched to water only feed; by increasing pump rpm, ran up system pressure to 1800 psig and blew out the plug so that with water only system was at 250°C, 680 psig; started dilute slurry again.
1:50 p.m.-Pressure rising again; shutdown. Decided to replace orifice assembly. Ertl cannot recall ever before running above 240°C for more than a few minutes. I reminded him of Dartmouth's producing about 5 gallons of hydrolyzate at 250-258°C earlier this year, 1 gallon of which is still stored in Dartmouth's refrigerator. Ertl and Converse couldn't recall which of them did that particular production run or if there were any operating difficulties associated with it.
2:25 p.m.-Restarted with two back-to-back zirconium orifice plates with 1mm orifice diameter; system at 250°C at 580 psig.
2:30 p.m.-251.5°C, 590 psig-dilute slurry feed-collected sample No. 1; solids floated and saw much unreacted material. Checked and found that pressure was below the saturation pressure so that steam was passing through the reactor and the residence time was shorter than the calculated 7. seconds.
2:40 p.m.-Started again with labyrinthe orifice and dilute slurry; 261°C, 710 psig; collected sample No. 2.
2:43 p.m.-270°C, 820 psig; collected sample No. 3.
2:55 p.m.-265°C, 750 psig; collected sample No. 4.

After one hour, samples 2, 3, and 4 had not even begun to settle; much colloidal material remained suspended.

Continued to run on dilute slurry until 3:30 p.m.-no pressure rise observed but product still poor.

The hydrolyzate samples were divided as follows:

Date	Sample No.	Disposition
5-24	1 (control)	Dartmouth to analyze and keep as control
5-24	2	Badger kept
5-25	-1	Badger kept
5-25	1	Badger kept
5-25	2	Dartmouth to analyze
5-25	3	Dartmouth to analyze
5-25	4	Split-Badger kept one, Dartmouth to analyze the other.

I left written instructions for Converse and Ertl to follow next week:

1.) Analyze Samples left (4 total, 1 marked control)
2.) After analysis on all 4 is complete, report results to S.W. Fitzpatrick of Badger and agree upon production run parameters and method of operation.

3.) A. Produce 100 gallons of hydrolyzate with same settling characteristics as sample marked control.

B. Check contents of product collection bucket by sampling and settling during collection time and transfer bucket contents to storage drum only if settleability is satisfactory.

I agreed to send a copy of the analyses to M. Karpuk of SERI. They will be transmitted through H.V. Kershaw, Project Manager for Badger.

In addition to the samples mentioned earlier, I also brought back:

- Bag of Wilner 170 wood flour
- Bottle of 15. weight percent slurry (Wilner 170)
- Bottle of 20. weight percent slurry (Wilner 170)
- Bag of wood grinds (needle-like) made by SERI.

R.D. Sexton

RDS:lcf

attachments

APPENDIX I

LABYRINTHE ORIFICE ASSEMBLY (see also illustrations)

The assembly is a stack of orifice plates of two types and of varying thicknesses held within a housing which can be coupled to the end of the reactor. The orifice plates are of zirconium and are kept in alignment with a pin that passes through a guidehole near the edge of each plate. Type I orifice is a single hole, 1.2 mm diameter slightly offset from the center. Type II orifice has a hole near the edge of the plate with channels engraved on both sides of the plate. One side has a channel of square cross section 1.2 mm x 1.2mm. The other side has an involute-shape large area channel 1.2 mm deep. Both channels are oriented so that if a Type II orifice plate is sandwiched by two Type I plates, the flow will be guided through the first Type I orifice through the channel across the surface of the Type II orifice, through the Type II orifice, back through the channel across the other surface of the Type II orifice, and finally through the second Type I orifice. Any number of combinations of Type I & II orifices that will fit within the housing may be used. The stack is compressed (no gaskets) within the housing to minimize bypass flow between the outside of the stack of plates and the housing. There is a 2 mm annular space between the inside wall of the housing and the plates.

Different overall pressure drops can be achieved by varying the number of each type orifice used and by orienting the Type II plates so that the involute channels face one way or the other.

APPENDIX I

LABYRINTHE ORIFICE ASSEMBLY

SERI
E-CA61

ORIFICE PLATES
EXPLODED VIEW

TYPICAL FLOW PATH

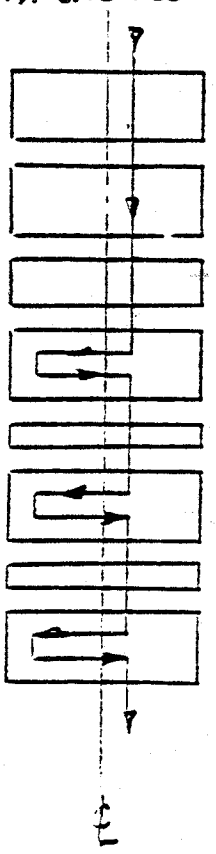

TYPE OF ORIFICE:

I
I
I
II
I
II
I
II

ASSEMBLY
SECTIONAL VIEW

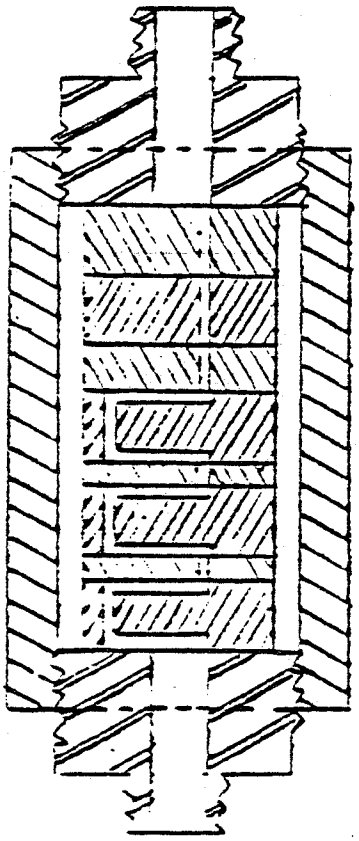

ORIFICES
PLAN VIEWS

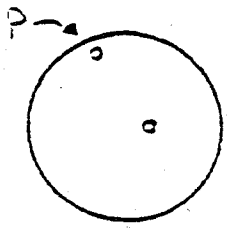

TYPE I

P = HOLE FOR BETA TUBING

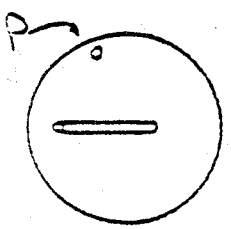

TYPE II

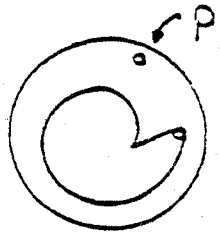

OBVERSE

REVERSE

DRAWINGS NOT TO SCALE

DHP
7.7.82

SERI
E-0461

APPENDIX II

DARTMOUTH STEAM INJECTOR

PLAN VIEW

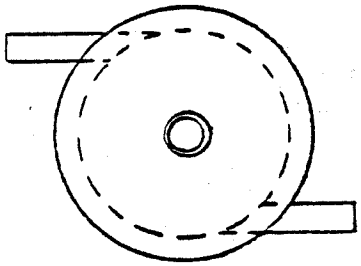

ELEVATION

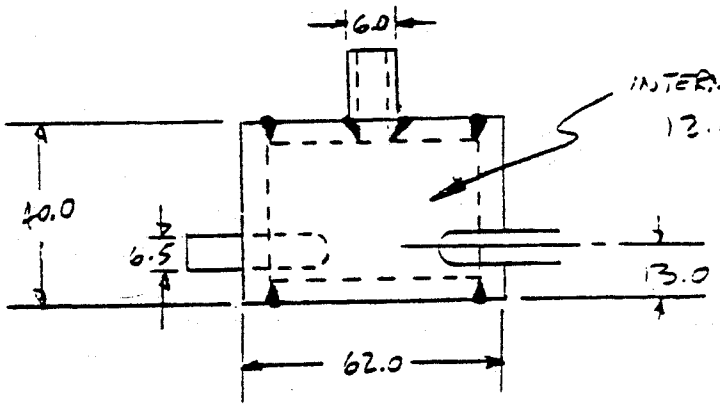

DRAWING NOT TO SCALE
DIMENSIONS IN MILLIMETERS

DAP
-13-84

cc: H.S. Klein

BADGER ENGINEERS, INC.

MEMORANDUM

June 29, 1984

TO: S. W. Fitzpatrick

FROM: R. D. Sexton

SUBJECT: Badger Job No. E-0461, SERI
Hydrolyzate Production for Hydroclone Trials
Trip Report for 15 June 1984 Visit to Dartmouth

The purpose of the trip was to witness the production of wood hydrolyzate by Dartmouth's acid hydrolysis process and to verify the suitability of the product for subsequent testing by hydroclone vendors.

The process was directly supervised by Prof. Alvin Converse and operated by the Thayer School lab technician, Hermann Ertl, with the assistance of graduate students John Ward and Bill Grous. About 1600 gallons of hydrolyzate produced two days ago had been collected in a drum and grab samples of the same material taken during production had been set aside. The material had been produced at 250°C (wall temp.), 7 seconds residence time, 1% acid and the wood slurry contained the acid prior to being pumped. Depending on the temperature, the product samples showed both floating and sinking solids. The higher the temperature the fewer floating solids; at lower temperatures (say 245°C and less) there were more floating solids and more solid material overall. Of the sinking solids there were two kinds distinguished by their light or dark color. None of the solids had dissolved when allowed to stand in kerosene for 24 hours. When spun in a centrifuge for 60 seconds all solids sank and the dark-colored solids were collected separately at the bottom. Dark solids amounted to about 10 percent of total solids. The product drum contained much foam. Samples were withdrawn from the drum in long glass double open-ended tubes in an effort to determine how much settling had occurred. No clear liquid could be found at any level. The drum contained only those batches of production which, when centrifugally spun, showed few solids indicating good conversion.

At 10:30 AM a production run was begun, using feed made up as follows: 12 L water, 1 kg Wilner 170, 205 g sulfuric acid 97%. A single zirconium orifice plate with 1 mm diameter orifice was installed.

Time	Wall Temp., C	Press., PSIG RXR	Boiler
10:30 AM	249.8-250.8, 4 sec cycling	560	770-800, 30 sec cycling

Because of the low RXR pressure, steam was not condensing, residence time and conversions were low, and product contained much solid material, all floating. Product was rejected. No vibration from steam injector.

10:30 AM 254.4-254.6, no cycling 630

Product contained both floating and sinking solids. Small solids fraction when spun down. Two kinds (colors) of solids. Product kept and added to drum. No vibration from steam injector.

11:10 AM 250.8-251.6 700

All solids floating again. Large fraction of solids when spun. Product rejected. Steam pressure control valve wide open. System is plugging up.

11:15 AM Shutdown

After disassembly, reactor showed plugging at both ends but not in the middle. The outlet (top) plug was tight material, extending halfway down the reactor, with a 1.5 mm ø channel in the center. The inlet (lower) plug was fluffy material and extended up into the reactor about 3 inches.

Plugging is a common feature of this process. Converse recalled that 5 years ago Dartmouth made 20 gallons of hydrolyzate for and could only make 6 or 7 gallons at a time before shutdown was necessary due to plugging. Dartmouth is unsure of the effect of presently using Wilner 170 feedstock instead of Wilner 060 that had been used in the past. They could run longer if the boiler was run at a higher pressure but this is presently not allowed by Dartmouth's Insurance Company.

Dartmouth asked if they would be paid in full if they put in the time and materials but could only make 30 gallons. I gave no answer.

In a telephone conversation with R. Sandel it was agreed that:

1. Dartmouth should make 30 gallons now for immediate shipment to Dorr-Oliver and later make 60 gallons for shipment to Bauer in July.

2. Badger would like to get whatever analyses have been made by Dartmouth for each run or day's operation, including material balances, solids content, liquid composition (HPLC analyses) in order to help understand reproducibility.

3. Badger would like to get samples of the tar.

4. We should agree on a "standard test" so we can consistently compare settling. We should compare settling of fresh material with the same material at the time Dorr-Oliver starts their test and after D-O has processed it so that the effects of time and processing on settlability can be judged. Dartmouth should retain 1 gallon of hydrolysate from the material it will ship to D-O.

Converse and I agreed on the following settling test procedure:

1. Using 12 ml tubes, spin for 60 seconds to de-aerate and pack solids. Measure high, low and average height of solid-liquid interface.

2. Resuspend by careful stirring so as not to re-aerate. Measure interface height after 1, 2, 24 and 48 hours.

I left written instructions with Converse as follows:

"Please provide the following information on each run (if it is available) that went into making up the bulk sample:

- Run parameters (RXR temp., RXR press., residence time, percent acid, percent solids, and whatever else you normally record).
- Product analyses ("standard" settling test, solids content, liquid composition.) Please retain 1 gallon sample for retesting at later times. This will help us to understand reproducibility of results."

Converse said they would report percent glucose, xylose, HMF, and furfural and percent glucose yield.

At 3 p.m. another production run was begun, using the labyrinthe orifice assembly.

Time	Wall Temp., C	RXR Press., psig	Spin Test
3:00 p.m.	254.6-255.2	730	Very Good-Few Solids
	252.2		
	250.2-253.4, .20 sec. cycling		Good-Few Solids
3:08	249.2		
3:09	248.6		
	246.2		
	244.8		
3:12	243.6	730(constant)	Poor-Increased Solids
3:12	Shutdown		

Dartmouth will continue next week going back to using the single zirconium plate orifice and making 6 to 8 gallons at a time, following my written instructions. They will continue to try to get the the insurance company to agree to increasing the boiler pressure rating.

I received a sample of the tar drilled out from the upper end of the reactor.

R.D. Sexton

RDS:lw

Summary Report on Preparation of Large Samples of Hydrolyzate for Badger

Hans E. Grethlein

A large quantity of hydrolyzate for Badger was prepared. Two 45 gallon Drums labeled A and B were shipped to Dorr-Oliver, Inc. in Stanford, Connecticut. The history of Drums A and B is given below.

The specifications were to produce a sample that has high glucose yield and good settling characteristics as was observed in the sample of 20ℓ we prepared for Badger in November 1983.

It was difficult to operate the reactor for more than 4 to 5 gallons of product hydrolyzate before the reactor or heat exchanger after the orifice blocked. During the period of time from May 22 to June 22, we tried many runs and finally evolved a procedure that is reasonable to produce large samples.

There are two failure modes of the reactor: 1) the solids plug inside the reactor usually by building up a wall layer in the reactor until the flow path is just a narrow channel at the center of the tube and 2) there is a blockage of solids at the cold end of the heat exchanger after they have passed through the let down orifice. The heat exchanger blockage can occur after a relatively short time of operation. The wall build up in the reactor is indicated by wide temperature variation between the top and bottom of the reactor. Normally, these agree to within a degree centigrade.

The use of various orifice sizes and types did not overcome the plugging problem. Two mesh sizes of Wilner mixed hardwood (grade 140 and 170) were used with similar results with regard to plugging the reactor.

During the period while these changes were made the hydrolyzate that had reasonable yield was accumulated in Drum A to about 45 gallons. The summary of results is given in Table 1. Drum A is the accumulation of runs from June 13 to June 18 with a yield generally above 50%. This incremental approach was too labor intensive, so a procedure was developed that allowed a larger sample to be prepared before the reactor plugged as discussed below.

The solids content for selected samples is given in Table 2. The settling characteristics vary and are sensitive to reactor conditions. The settling volumes are given in Table 3 and photos of the freshly mixed slurry after 24 hours of settling are given in Figure 1.

The normal flow rate is about 800 mL/min, which gives an average velocity of 0.46 ft/sec or a Reynolds number of 1700. This low velocity was considered part of the problem in allowing the solids to stick to the reactor wall. So the reactor length was increased from 87.5 cm to 132.5 cm. on June 18 with a corresponding pump RPM increase to keep the same residence time while increasing the velocity to .70 ft/sec. After a short time the system failed in the heat exchanger because tars when cooled can form a plug. Consequently, we removed the heat exchanger and flashed the reactor effluent through a cyclone separator. The steam was vented to the atmosphere and the liquid collected at 100°C.

One could see the dramatic appearance of tar in the hot flashed liquid slurry as the reactor temperature passed a critical point corresponding to about 50% yield. in fact, the tars even plugged the exit of the cyclone separator because the cyclone does not have net pressure with the vent open to the atmosphere.

The final procedure on June 22 involved a frequent reaming of the exit cone of the cyclone to keep the tar from building up. Now about 25 to 30 gallons were made in one afternoon instead of 2 to 4 gallons per run. The final failure under the new procedure is the wall build up of solids in the reactor, but the rate of buildup is slower than before due to the modest increase in velocity. Since the Badger design will use about 10 ft/sec, the wall build up may not occur, but some pilot plant work is needed here. The material in Drum B is obtained with the cyclone.

One important change in the settling characteristics is noticed when using the cyclone - the solids all settle to the bottom. The foamy solids that are obtained with the heat exchanger are due to the mixing of non-condensables with the slurry in the heat exchanger. The hydrolyzate foams easily and so a fairly stable phase of floating solids can form. The cyclone clearly disengages the slurry from the gas phase.

The effects of the cyclone is noticed in Table 1 for sample for June 20 and later. The sugar concentrations increased due to the steam flashed from the cyclone and the furfural concentration in the hydrolyzate is lower than before due to the partial flashing with the steam. The yield calculation is an estimate based on the effective steam dilution factor (0.873) for the combined steam injection and flashing in the cyclone. During the run on June 22, when about 25 gallons was made, the run was prolonged by decreasing the pump RPM as

the reactor pressure increased due to wall build up to keep about a constant glucose concentration in the reactor effluent, as measured on-line with a glucose analyzer.

For the record, the HPLC analysis of samples taken during the various runs as well as the Drums A and B are given in the Appendix. The HPLC sample numbers are defined in Table 1.

TABLE 2: Solids of Badger Samples

Sample ID	[g/kg]
Drum A	11.2
Drum B	18.5
6/13 - 2	11.3
6/14 - 3	11.5
6/15 - 5	8.7
Run # 11/6	13.4
6/18 - 1	10.8
6/18 - 2	8.7
6/21 - 2	14.9
6/22 - 2	16.4
Feed 6/21	65.3

TABLE 3: Settling of Badger Samples

50 ml Samples. Settled Level in Graduated Cylinder

HPLC No.	Sample ID	1 hour	2 hours	24 hours
1	Drum A	46 - 30*	46 - 26	47 - 22
2	Drum B	48	46.5	33
3	6/13 - 1	38	31	17
4	6/13 - 2	45 - 33	45 - 28	45 - 20
5	6/14 - 3	43 - 22	43 - 26	45 - 20
6	6/15 - 4	8 - 4	13 - 5	26 - 11
7	6/15 - 5	20	15.5	11
8	6/15 - 6#11	18 - 0	20 - 0	22 - 0
9	6/18 - 1	44 - 29	44 - 24	45 - 18
10	6/18 - 2	14	12	9
14	6/21 - 1	48	45.5	31
15	6/21 - 2	49	47	30
16	6/21 - 3	48	46	34.5
17	6/22 - 1	49	47	40
18	6/22 - 2	49	47.5	38
19	6/22 - 3	49	38	38
20	6/22 - 4	49	49	44.5

*NOTE: Two numbers give the upper and lower boundary of clear liquid where there are two solid phases, one on top and one settled.

TABLE 1: HPLC Analysis of Glucose Yield and Reactor Conditions for Badger Samples

HPLC No.	Sample ID	Glucose g/L	Xylose g/L	HMF g/L	Furfural g/L	D.F.*	Glucose Yield %	Reactor Conditions: Wall Temp. °C	Reactor Length cm	Orifice	Pressure psi	Comments
1	Drum A	9.15	3.50	1.55	3.38	0.625	53.4					Substrate Mixed Hardwood Flour from
2	Drum B	14.01	7.92	1.18	0.80	0.873	58.5					Wilner Wood Products. Grade 170 in
3	6/13 - 1	10.01	2.84	1.72	3.60	0.635	57.5	240	87.5	two, 1 mm		all runs except as noted.
4	6/13 - 2	10.16	3.54	1.29	3.23	0.635	58.3	250	87.5	two, 1 mm		
5	6/14 - 3	9.10	3.08	1.50	3.43	0.635	52.3	240/250	87.5	two, 1 mm		All runs made from feed slurry con-
6	6/15 - 4	9.20	4.15	1.08	2.48	0.625	53.7	250	87.5	one, 1 mm		sisting of 12 ℓ water, 1 kg wood
7	6/15 - 5	9.24	2.83	1.51	3.22	0.615	54.8	255	87.5	one, 1 mm		flour, and 205 g, 97% H_2SO_4.
8	6/15 - 6#11	8.51	4.91	0.73	2.26	0.615	48.3	255	87.5	Vortex		
9	6/18 - 1	9.71	3.75	1.69	3.95	0.625	56.6	250	132.5	two, 1 mm	590 to 740	Drum A contains material from 6/13
10	6/18 -2	7.97	2.22	1.87	4.51	0.625	46.5	250	132.5	two, 1 mm	590 to 740	to 6/18. Drum B contains material
11	6/20 - 240	12.43	6.48	0.97	0.91		51.9	240	132.5	two, 1 mm	510	from 6/20 to 622.
12	6/20 - 245	13.23	5.61	1.30	0.85		55.2	245	132.5	two, 1 mm		
13	6/20 - 250	14.25	3.77	2.00	1.04		59.5	250	132.5	two, 1 mm		Wilner Grade 060 used for 11 to 13.
14	6/21 - 1	13.26	5.08	1.52	0.87		55.4	245	132.5	two, 1.2 mm	520	Cyclone separator for 11 to 20.
15	6/21 - 2	13.48	4.60	1.60	0.84	0.873	56.3	to	132.5	two, 1.2 mm	to	
16	6/21 - 3	12.16	5.47	1.20	0.82		50.8	242	132.5	two, 1.2 mm	740	
17	6/22 - 1	14.68	8.06	1.11	0.64		61.3	245	132.5	one, 1.2 mm	520	
18	6/22 - 2	15.48	7.22	1.30	0.79		64.7	250	132.5	one, 1.2 mm	570	
19	6/22 - 3	15.69	7.87	1.21	0.78		65.5	250	132.5	one, 1.2 mm	700	
20	6/22 - 4	13.48	9.67	0.79	0.58		56.3	245	132.5	one, 1.2 mm	720	

Yields are based on 42% potential glucose and 65.3 g solids/kg

* dilution factor due to life steam injection

\# calculated dilution factor for flash to atmosphere.

Figure 1: Photos of Freshly Stirred Hydrolyzate After 24 hours of Settling on June 27, 1984. Sample Identification is the HPLC No.

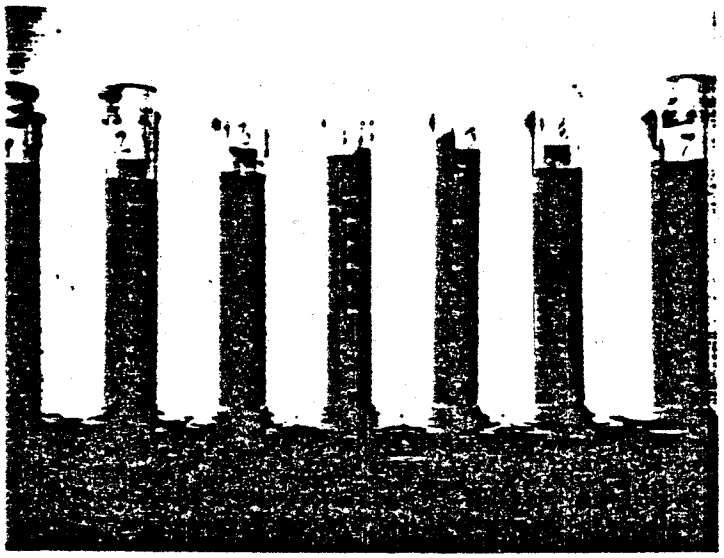

Photo a) Samples 1, 2, 3, 4, 5, 6, and 7

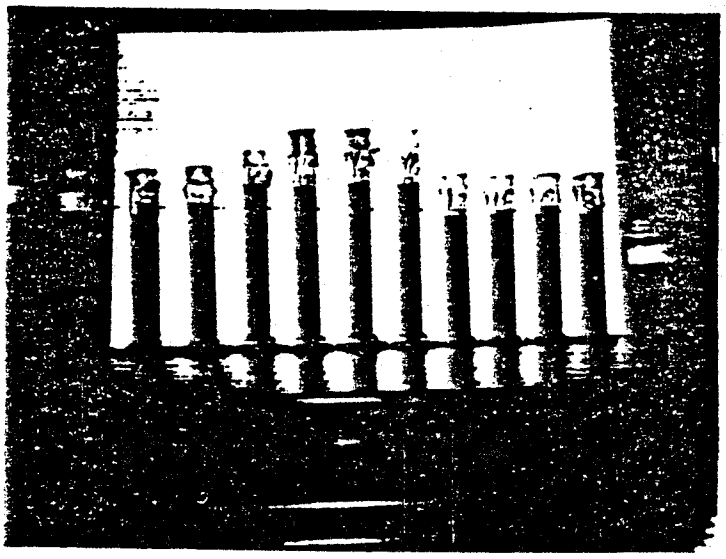

Photo b) Samples 8, 9, 10, 14, 15, 16, 17, 18, 19 and 20

Lignin/Tar Separation Trials

Report on Change Order Number 2 to
Subcontract Number ZX-3-03096-2

Acid hydrolysis of lignocellulosic material using the Dartmouth plug flow reactor results in a hydrolyzate stream comprising lignin and tar solids in an aqueous acidic sugar stream. Separation and washing of the solids represents an important processing step. The key requirement is to remove the solids while minimizing losses of fermentable sugar in the cake liquors. Wash water must be minimized in the process since this dilutes the hydrolyzate stream going to fermentation and leads to excessive energy requirements for either distillation of a dilute alcohol beer or concentration of the fermentation feed. Further requirements for the separation were to maximize the solids recovery since they form a major fraction of the fuel for the boilers and to minimize the water content of the solids cake since this water must be removed by drying in order to give efficient combustion in the boiler.

Preliminary Testing

Various unit operations for separation and washing were examined in a preliminary study. These were filtration, froth flotation, hydroclones, and centrifugation.

In a preliminary exercise the above methods were assessed by test at vendors or at Badger's Weymouth Laboratory. The conclusion of this preliminary work was that two methods looked promising: hydroclones and centrifugation. The other two options were eliminated for the following reasons:

Filtration

Samples of hydrolyzate produced at Dartmouth were used in filtration tests in Badger's Weymouth Laboratory. Tests were carried out in a 4" Buchner funnel with a variety of filter cloths. The hydrolyzate was found to be extremely slow filtering due to blinding of the cloth even after addition of a flocculating agent. The apparent specific cake resistance was measured at 2.1×10^{-14} m^{-1}. Filter tests performed at Bird Machine Company, Inc. on a sample of the hydrolyzate resulted in the same qualitative conclusions (report attached).

Froth Flotation

Dartmouth hydrolyzate sample were sent to three manufacturers of flotation equipment. Krofta Engineering Corporation, Linatex Corporation of America, and Komline-Sanderson, Inc. Tests at all three laboratories showed that froth flotation was a suitable primary method of solids separation. Approximate capital costs were generated for a system using froth flotation as the primary means of separation followed by centrifuges for washing and dewatering. Consideration of the capital costs involved revealed that this was not a cost-effective means of separation.

From preliminary consideration, centrifuges and hydroclones were found to be the most suitable separation methods.

Centrifuges

Merco washing centrifuges appeared to be a suitable means of separation and washing. These machines built by Dorr Oliver, Inc. are capable of handling large feed volumes for over 600 gpm while carrying out a high efficiency pseudo-displacement wash on the separated solids. Calculations suggested that with the high efficiency wash three stages of centrifuges would be required to give a 99% recovery of sugars using a wash water addition rate of 20% of the feed hydrolyzate flow.

Preliminary tests at vendors' laboratories (Bird Machine, MA; Sharples, NY; and Dorr Oliver) indicated that the use of centrifuges for separation was promising (see attached vendors reports).

A further witnessed trial at one of the vendor's laboratories using Dartmouth hydrolyzate was planned.

Hydroclones

On initial consideration hydroclones appeared to be the most attractive option allowing a number of counter-current stages of washing and separation for relatively low capital cost. Calculations indicated that with ten stages of hydroclones, 99.6% recovery of sugars was possible with a wash water addition rate of only 20% of the feed hydrolyzate flow. Samples of Dartmouth hydrolyzate were sent to two manufacturers of hydroclones, C.E. Bauer and Dorr Oliver for preliminary testing. On preliminary inspection of the samples both vendors indicated that hydrolyzate separation looked feasible. It was planned to carry out large scale witnessed trials to determine hydroclone separation performance in continuous operation.

Hydroclone and Centrifuge Trials at Dorr Oliver

An additional unsolicited proposal for Change Order No. 2 was made to SERI to test the two separation methods which had been identified in the preliminary testing exercise. It was planned to produce 70 gallons of hydrolyzate for two continuous hydroclone tests. A report on the hydrolyzate production campaign is given in Appendix III.

The hydrolyzate was planned to be shipped to one manufacturer, and if the hydroclone tests were successful to the second manufacturer for a confirmatory trial. It was planned to use a portion of the hydrolyzate for centrifuge trials. It was decided to carry out the first trials at Dorr Oliver since this would provide an early opportunity to witness the test for the Merco centrifuge as well.

To determine whether the settling characteristics of the hydrolyzate slurry changes over time gravity settling tests were carried out during production of the hydrolyzate at Dartmouth and again at the vendors' laboratories.

Results

The results of both the hydroclone trial and centrifuge tests are contained in the attached report from Dorr Oliver. The results can be summarized as follows:

(1) A significant increase in the gravity settling rate was observed over the period between production and testing at Dorr Oliver. This is thought to be due to disengagement of air from the solids during standing and shipment. This conclusion was reinforced by the observation that when samples were remixed with air at the vendor's laboratory the slower settling was again observed. Air entrainment was observed to have no effect on centrifuge settling rate (centrifugal force causes extremely rapid disengagement of air).

(2) Hydroclones do not separate the lignin/tar solids from the hydrolyzate. The failure of this trial in the light of preliminary favorable indications is thought to be due to floc disintegration in the high shear regime created in the hydroclones. Although in the earlier preliminary tests, flocs appeared to settle well under gravity the extremely fine particles created on floc disintegration do not. Some separation was observed with the hydroclone evidenced by the darker color of the underflow. This was due to separation of gritty tarry material.

(3) Centrifuge spin tests worked well on the hydrolyzate indicating that this is an ideal application for centrifuges. On the basis of this test, a separation system using Merco centrifuges for separation and a solid bowl centrifuge for dewatering has been specified by Dorr Oliver. This system gives complete removal of the lignin/tar solids and 99% recovery of sugars using a wash water flow of only 20% of the hydrolyzate feed stream.

Attachments

(1) Filtration and centrifugation test report from Bird Machine Company, Inc.

(2) Centrifugal separation test reports from Sharples.

(3) Dorr Oliver test report on the hydroclone and the centrifuge test.

BIRD MACHINE COMPANY, INC.

CUSTOMER: Badger

REPORT NO. 10552

SPIN TUBE TEST
As received, 10 ml, 240°F

	sec	cc Cake	% Vol Cake	Cake Cond	Eff Cond
1000 x G	10	1.5	15	0	sl. cldy.
	30	1.2	12	0	clear
	60	1.05	10.5	0	"
	120	0.9	9	0.05	"
	180	0.8	8	0.05	"
	300	0.7	7	0.05	"
	480	0.67	6.7	0.05	"
2000 x G	60	1.0	10	0.05	clear
	120	0.9	9	0.05	"
	180	0.8	8	0.1	"
	300	0.6	6	0.1	"

The solids settle out readily in a reasonable time but the solids have little bulk even with extended spin time.

A sample of this material spun for 2000 x G for 3 minutes produced a cake containing 25.3% TS by weight.

BIRD MACHINE COMPANY, INC.

CUSTOMER: Badger

REPORT NO. 10552

SPIN TUBE TEST
10 ml, 1000 x G, 240°F

	Time	% Solids in Supernate SUSPENDED	% Solids in Settled Cake T.S.
1	3	0.9	8.7
2	10	0.5	9.0
3	20	0.4	10.2
5	40	0.2	18.0

	Time	% Recovery (Comparison of Supernate to Feed)
1	3	25.0
2	10	58.3
3	20	66.7
4	30	75.0
5	40	83.3

Only a trace amount of cake is collected on the Bird Young leaf (rotary drum filter leaf) and spitback is a problem. The filtrate is dirty with a K-15 cloth and only a few mls are collected.

The filtration time is long on the Bird Pannevis leaf (belt filter) with a thin cake collected.

Since this material is not typical in particle size, the filtration characteristics will be markedly different with the typical production slurry. The filtration rate is influenced by particle size distribution.

The sample as received is a poor application for vacuum filtration.

MAM:cg
Typed 3/28/84

Report No: 10522

Page: 6 of 7

BIRD PANNEVIS LEAF DATA

Customer: Badger

Feed Material: Lignin

Feed Specific Gravity: 0.99

Mother Liquor, Specific Gravity: 1.00

Mother Liquor, % Dissolved Solids: 3.4

Wash Composition:

☐ Countercurrent ☐ Direct

Leaf Area: 80 cm^2

	FEED						PRI. FILT.		WASH #1			CAKE					
RUN NO.	Volume mls	Temp °C	Vacuum "Hg	Surface Dry sec	% Susp. Solids		Volume mls	% Susp. Sol.	Volume mls	Temp °C	Time sec	Thickness cm	Dry Time sec	Vacuum "Hg	Gms Wet Cake	Gms Dry Cake	% Sol T
A	24	116	17	225	1.2	19.4	0.03				0.05	30		1.5	0.5	33.3	

Cloth: PEK-15

BADGER ENGINEERS, INC.
SUBSIDIARY OF THE BADGER COMPANY, INC.
ONE BROADWAY, CAMBRIDGE, MASSACHUSETTS 02142
Tel. (617) 494-7000
Telex 92-1442

February 28, 1984

Mr. J. Gould
Pennwalt Corporation
955 Mearns Road
Warminster, Pennsylvania 18974

Dear Mr. Gould:

I was recently discussing a possible application of Sharples centrifuges with your Mr. Edward Trump. The application involves separation and washing of lignin residue from the outflow stream of a high temperature wood hydrolysis reactor as part of a U.S. D.O.E. feasibility study on chemicals production from wood. Mr. Trump suggested that I forward a sample of the reactor product to your laboratory for a preliminary assessment.

Enclosed herewith is a 250 ml sample of hydrolysate marked "BADGER SAMPLE 250°C" along with a questionnaire form.

Due to experimental limitations, the solids concentration in the sample is approximately 2% by weight. The commercial scale reactor will produce a slurry effluent containing approximately 5% by weight.

Yours sincerely,

BADGER ENGINEERS, INC.

S. W. Fitzpatrick

SWF:sh
Enclosure

FORM 1025

PENNWALT CORPORATION

SUBJECT Badger Engineers
Cambridge, Massachusetts

DATE March 20, 1984

TO C. E. Trump

FROM Jerry Gould COL #1642

IN RE Clarification of Hydrolysate (Fuel Alcohol)

COPIES TO R. Moll, D. S. Hammond, A. Letki, J. Sacks, file

Dear Ted:

Refer to the attached letter and flow schematics from S. W. Fitzpatrick of Badger Engineers for process details.

The maximum temperature of feed to the centrifuge will be 225°F (108°C).

The submitted sample was evaluated with a bottle centrifuge; details are attached.

If the samples returned to the client are acceptable then, ignoring metallurgy, a Super-D-Canter could be recommended at a fairly high effective rate, e.g. P-800 at 3-4 gpm.

Very truly yours,

Jerry Gould

JG:sw
Attach.

CLIENT BADGER ENGINEERS, INC

DATE 3-6-84

BOTTLE CENTRIFUGE EVALUATION
(RCF X G = 2000) 190°F

SPIN TIME MINS

SLURRY AR ① ✓
LIQUID APPEAR ②
SEDIMENT ~~CC~~
%

SLURRY WF ①
LIQUID APPEAR ②
SEDIMENT CC
%

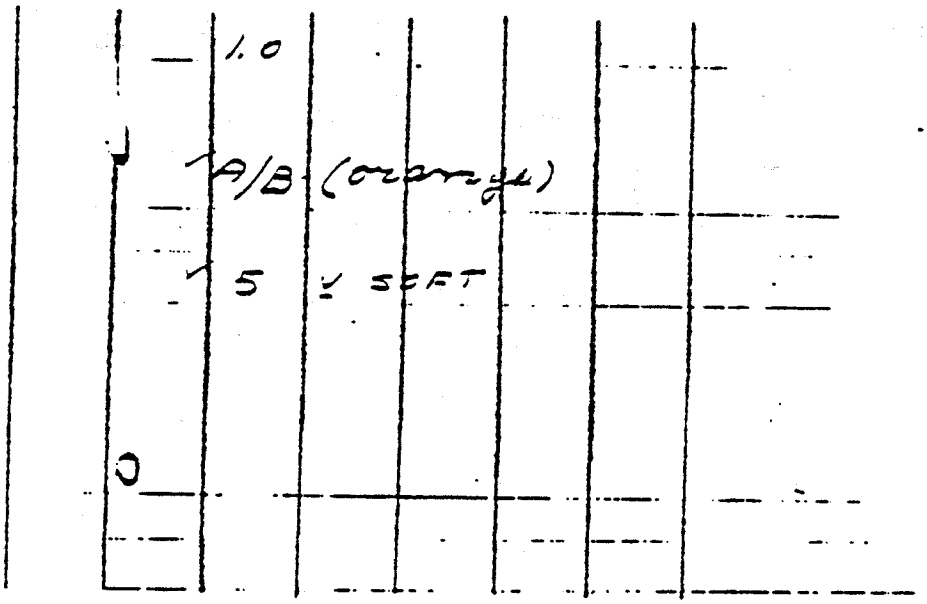

① AS RECEIVED pH > 1.0
WITH FLOCCULANT

② A CLEAR
B SL CLOUDY
C CLOUDY
D = FEED

✓ sample returned to client

DORR-OLIVER
DORR-OLIVER INCORPORATED

274 RIVERSIDE AVENUE
WESTPORT, CONNECTICUT 06880
TEL. 203 358-3800

August 16, 1984

Badger Engineers, Inc.
One Broadway
Cambridge, MA 02142

Attention: Mr. S. W. Fitzpatrick

Reference: Countercurrent Washing of Lignin

Dear Mr. Fitzpatrick:

Please find enclosed three (3) copies of Lab. Order 84041 describing the results of the 10mm DorrClone testwork that you witnessed at our laboratory. Although the tests showed that 10mm DorrClones could not make the separation desired, spindown tests showed that a Merco Disc-Nozzle Centrifuge appears to be a promising alternative. The Merco Centrifuge would also give an effective washing capability. The samples collected during the DorrClone tests have been sent to you under separate cover.

For your expected flowrates of 705102 #/hr of lignin slurry and 131964 #/hr of wash water, we would recommend a 3 stage countercurrent wash with our Model H-36 Merco Centrifuge. Two (2) H-36 centrifuges would be required for each stage. Budget pricing for these centrifuges would be $1,650,000. Two (2) Model 25L MercoBowl Centrifuges would be required to thicken the Merco underflow from 25% solids to a 50% cake. Budget pricing for two (2) Model 25L MercoBowl Centrifuges would be $400,000.

For the one-fifth scale plant, the equipment would be correspondingly smaller. Three (3) stages of Merco Model H-30 centrifuges would be required. Budget pricing for three (3) H-30 centrifuges would be $550,000. One (1) Model 22L MercoBowl Centrifuge would be required for dewatering of the Merco underflow. Budget pricing for this unit would be $150,000.

The one-twenty fifth scale demonstration plant would require three (3) stages of the Model H-20 Merco Centrifuge. Budget pricing for these units would be $350,000. In addition, one (1) Model 12L MercoBowl would be required for dewatering the merco underflow. Budget pricing for this unit would be $65,000.

As we discussed, small scale laboratory equipment is available on a rental basis for further process sizing requirements. I enclose bulletins MB-1 and 2612 describing the Merco and MercoBowl Centrifuges and their features in detail. I look forward to working with you in the next stage of pilot development and thank you for your interest in Dorr-Oliver process equipment.

Very truly yours,

Michael J. Smith,
Resident Manager
Eastern Region

MJS:pk

Enclosures

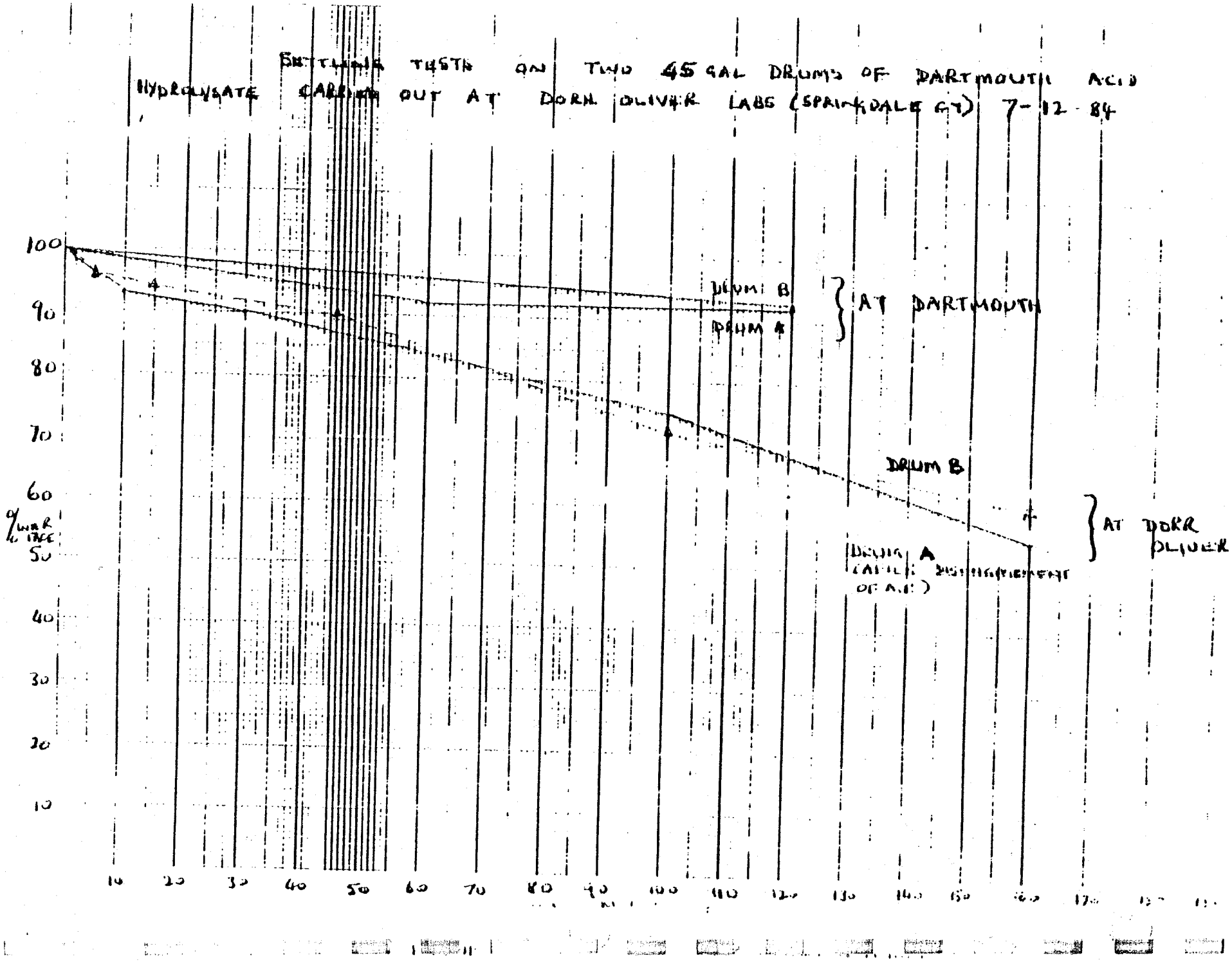
SETTLING TESTS ON TWO 45 GAL DRUMS OF DARTMOUTH ACID
HYDROLYSATE CARRIED OUT AT DORR OLIVER LABS (SPRINGDALE CT) 7-12-84
100
90
80
70
60
50
40
30
20
10
% WATER IN THICKENER UNDERFLOW
DRUM B
DRUM A
AT DARTMOUTH
DRUM B
AT DORR OLIVER
DRUM A (AFTER ADJUSTMENT OF A.F.)
10
20
30
40
50
60
70
80
90
100
110
120
130
140
150
160
170

LO 84041 July 1984

DISTRIBUTION

M. Smith (4+1)	Westport
T.H. Bier	Stamford
P. Nyrop	"
J. Peeters (2)	"

Material File (2)

Abstract (14)

RECOVERY OF LIGNIN WITH A 10mm DORRCLONE

prepared by DORR-OLIVER LABORATORIES for

Badger Engineers, Inc.
Cambridge, MA 02142

DORR-OLIVER

order number: LO 84041 July 23, 1984

RECOVERY OF LIGNIN WITH A 10mm DORRCLONE

A laboratory trial was conducted for Badger Engineers, Incorporated to determine the feasibility of using a 10 millimeter DorrClone to recover lignin from an acidic slurry.

Due to excessive foaming of the slurry, and the tendency of the lignin to absorb gas and float, the 10 millimeter DorrClone was not an effective means of concentration.

A laboratory centrifugal spin test was performed on the samples giving promising results for the use of a Merco disc-nozzle centrifuge or Merco Bowl solid-bowl centrifuge.

CONFIDENTIAL

This Publication contains information of a confidential nature deemed proprietary to Dorr-Oliver Incorporated, its subsidiaries and affiliated companies. Its purpose is to provide technical guidance and/or information (a) for Dorr-Oliver personnel only in the conduct of the company's business, and (b) in any case where this Publication and/or the test work referred to therein was prepared and/or performed for another company, for that other company in the conduct of its business. Such information is not to be disclosed, in whole or in part, to any other persons, nor is it to be used for any other purpose.

I. CLIENT

Badger Engineers, Incorporated
One Broadway
Cambridge, MA 02142

II. SAMPLE

Two 30-gallon drums of slurry (labeled Drum A and Drum B) were received at the Springdale Development Center from Dartmouth College. The samples are the product from a reactor utilizing wood chips and acid. Each of the samples contain lignin (solid) in an acidic solution (pH of approximately 1.0).

III. OBJECTIVE

To determine the feasibility of using a 10 mm DorrClone to recover lignin from an acidic slurry.

IV. SUMMARY AND RECOMMENDATIONS

1. Due to the foaming of the slurry and the tendency of the lignin to absorb gas and float, the 10 mm DorrClone is not a suitable means to recover the lignin.

2. Total solids analysis were done on samples from Drum A and B. The results were 2.98% TS (Drum A) and 4.38% TS (Drum B).

3. A laboratory spin test was performed on both samples using a clinical centrifuge. The results indicate the use of a Merco disc-nozzle centrifuge to be very promising. A pilot test is recommended.

V. DETAILS

A. INTRODUCTION

The test slurry was used as is from each drum. The slurry was then fed to a Doxie 5 unit in an effort to remove the lignin. The overflow and underflow were mixed in the feed tank, reconstructing the feed and thus allowing continuous operation. (Figure 1).

B. PROCEDURE

1. Gently mix Drum A slurry with wooden paddle.

2. Add approximately 10 gallons of sample from Drum A to tank.

3. Start pump with by-pass valve open and feed valve open.

4. Increase feed pressure to approximately 40 psi by closing the by-pass valve.

5. Restrict underflow with a needle valve to give approximately an 80/20 flow split and results in a higher underflow concentration.

6. Sample feed, overflow, and underflow.

7. Measure overflow and underflow capacity with stop watch and calibrated bucket and record results (Figure 2).

8. Adjust the underflow needle valve to obtain another flowsplit and repeat Steps 6 and 7.

9. Return slurry to Drum A.

10. Repeat Steps 1 through 9 for Drum B.

VI. DISCUSSION

The primary negative factor encountered in the trial runs was foaming of the slurry which resulted in flotation of the solids rather than settling. The foaming is due to the tendency of the lignin to absorb gas when the slurry is very slightly agitated. As a result, the 10mm DorrClone was not effective in recovering the solids.

Samples from Drum A and B were put in two 15cc graduated test tubes and spun in a clinical centrifuge at 50G force for 30 seconds. The settled volume and centrate clarity were noted (Figure 3). This procedure was repeated for a 1 minute spin. The assessment of centrifugal capability was made using the centrate quality (Figure 4). From the results obtained, a Merco disc-nozzle centrifuge or a Merco Bowl solid-bowl centrifuge has good possibilities. A pilot test is in order at this point to establish separation performance, maximum throughput capacity, and full scale requirements.

DORR-OLIVER LABORATORIES

John F. Peeters

John F. Peeters

Checked and Approved:

Per Nyrop

Figure 1

DOXIE 5 TEST STAND

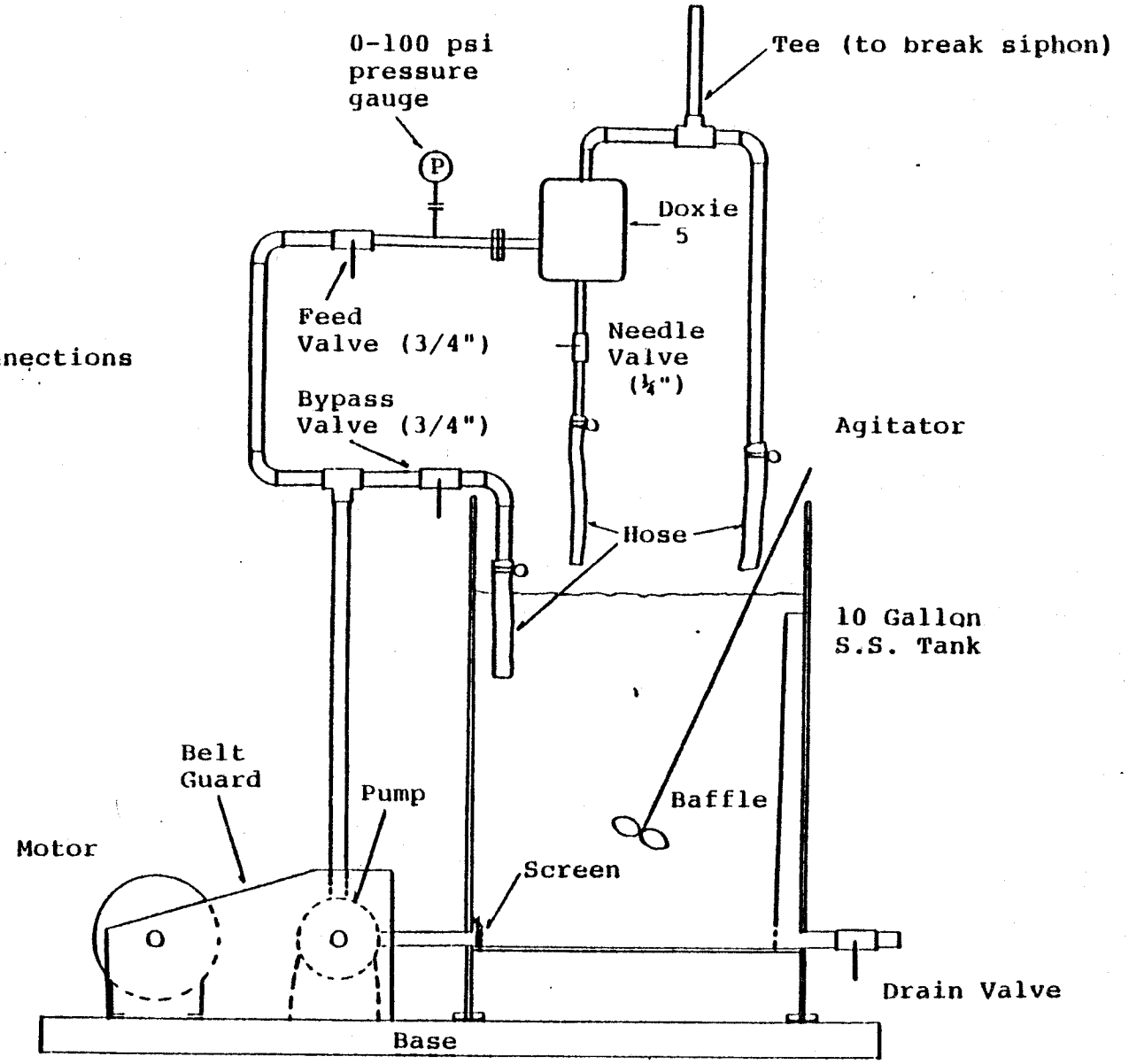

Note:

All Doxie 5 Connections are ½" npt.

J.F.P.
7/24/84

Figure 2

Doxie Test Data

Run	Drum	$\Delta P^{(3)}$ (psi)	O'Flow (gpm)	U'Flow (gpm)	Split (OF/UF)	Temp (°C)	Sample Jars (4)
1	A	37	5.6	0.2	97/3	23	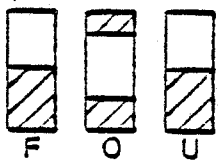
2	A	31	3.0	1.1	73/27	-	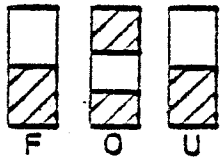
3	B	33	2.25	1.1	67/33	-	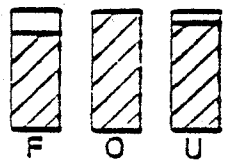
4	B	33	2.6	0.75	78/22	29	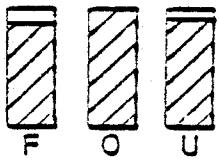

Notes:

(1) Solids are floc-like.

(2) Slurry in tank remained unagitated for 1 hour between run 3 and 4 to let the foam dissipate.

(3) The pressure drop is the highest that could be obtained with the present pump on the test stand.

(4) The samples collected were observed one hour later.

Figure 3

Spin Test Data

	Drum A	Drum B
30 Second Spin	2.5 ml Solids in 15 ml Total	5.2 ml Solids in 16 ml Total
1 Minute Spin	2.2 ml Solids in 15.5 ml Total	4.4 ml Solids in 15 ml Total

Notes:

(1) Approximately 0.5 to 1 ml of solids are a darker brown.

(2) Very loosely packed solids.

(3) Centrate is clear in all spins.

Figure 4

Centrifugal Separation Capability

Time to get clear centrate (Minutes)	Centrifugal Separation Capability
0.5	Good
1.0	Marginal (borderline)
3.0	Poor

Calculation for Assessment of Technical Risk from Point of View of Cost Growth and Performance Shortfall

Based on Methodology from Rand Report R-2569-DOE
September 1981

(1) Present Estimate

Estimate the Rand cost growth factor based on present level of research and development and commercial plant cost estimate as defined by Badger report of September 1984.

Percent New

- Variable Definition: "Percent of capital cost in technology proven in commercial use." Range: 0-100
- Assume Hydrolysis unit is only unit unproven in commercial use.
- From Cost Estimate: 21.74/103.4 x 100 = 21

Impurities

- Variable Definition: "Assessment by industry process engineers of difficulties with process impurities encountered during development." Range: 0 = None, 5 = Major

- Variable includes impurities build up as it relates to catalyst deactivation and corrosion.

- Plant has two major liquid recycle loops (from stillate evaporation and from furfural recovery).

- Recycle loops present catalyst (yeast) deactivation and equipment sizing/capacity problems. Prediction of hydrolyzate fermentability is an area of technical uncertainty affected by impurity build up.

- Corrosion is not expected to be a problem since plant definition includes reasonable use of stainless steel.

- Judged Value: Medium-high because of understanding of yeast inhibition.

- Use 3.

Complexity

- Variable Definition: "Simply a count of the number of continuously linked process steps or block units in the plant."
- Block Units Include: Feedstock handling, hydrolysis, fermentation, ethanol purification, furfural recovery, offsite tankage, waste treatment, utilities.
- Use 8.

Inclusiveness

- Variable Definition: "Percentage of three items included in the scope of an estimate." Range: 0-100
- All items were addressed in Badger estimate as items of cost to be estimated, and were included in from our number. Could argue value is 100.
- Use 90.

Project Definition

- Variable Definition: "Levels of engineering and site-specific information included in estimate." Range: 2 = Most, 8 = Least

- Study not site-specific, however, environmental impact minimized by design.

- Use 6.

Process Development Stage

- Variable Definition: "Selection of stage of process development from four categories." Range: 0 if proven at commercial or precommercial, 1 if at R&D stage.

- Choose stage "(2) Development: A coordinated R&D program is underway."

- Use 1.

Cost Growth

o Intercept	1.12196
o (Percent New = 21) x -0.00297	-0.06237
o (Impurities - 3) x 0.02125	-0.06375
o (Complexity = 8) x -0.01137	-0.09096
o (Inclusiveness = 90) x +0.00111	+0.0999
o (Project Definition = 6) x (Process Development Stage = 1) x -0.06361	-0.38166
o Cost Growth	0.62312

(2) With Demonstration Unit

(This is an integrated demonstration plant encompassing all the major process units.)

What can be expected in reduction in cost growth ratio from building and operating the demonstration unit.

Cost Growth

o Intercept	1.12196
o Percent New - Unchanged at 32	-0.06237
o Impurities - Assume that demono will increase understanding of effect of recycle on fermentability. Therefore decrease value to 1 (1) x -0.02125	-0.02125
o Complexity - Unchanged at 8	-0.09096
o Inclusiveness - Unchanged at 90	+0.0999
o Project Definition - Slightly increased site-specific information available say reduce to 5.	
o Process Development Stage - Increase stage of development to (3). Precommercialization: "Pilot work of demonstration type and there are sufficient data to start design on a commercial unit." (5)(-0.04011)	-0.20055
o Cost Growth	0.84673

(3) With Site-Specific Study

(A description of a typical site-specific study is given on page 14 of this Appendix.)

What can be expected in reduction of cost growth ratio from completing a site-specific study.

Cost Growth

o Intercept	1.12196
o Percent New - Unchanged at 21	-0.06237
o Impurities - Unchanged at 3	-0.06375
o Complexity - Unchanged at 8	-0.09096
o Inclusiveness - Increased to 100 (100) x +0.00111	+0.111
o Project Definition - Reduced to 4 Level of Engineering: (2) Study design (Moderate Basis). Quality of Information: (2) Preliminary or limited work.	
o Process Development Stage - Unchanged at R&D Stage (2) (4) x -0.06361	-0.2544
	0.805

(4) With Both

What can be expected in reduction of cost growth from both the building and operating of the demonstration unit and completing the site-specific study.

Cost Growth

o Intercept	1.12196
o Percent New - Unchanged at 32	-0.06237
o Impurities - Reduce to 1 (Demo)	-0.02125
o Complexity - Unchanged at 8	-0.09096
o Inclusiveness - Increase to 100 (Study)	+0.111
o Project Definition - Reduce to 4 (Study)	
o Process Development Stage - Increase to (3) precommercialization (Demo) (4) x -0.04011	-0.1604
o Cost Growth	0.898

Calculation of Technical Risk from Point of View of View of Performance Shortfall

Based on the Rand Methodology from Rand Report R-2569-DOE
September 1981

(1) Present Estimate

Estimate the most likely plant performance in months 7-12 after startup as a percentage of design assumed in Badger study.

New Steps

- Variable Definition: Number of process units that incorporate technology unproven in commercial use.
- Assume uncertainty lies in hydrolysis unit. Since hydrolysis unit covers many steps treat as two units.
- Assume 2.

Balance Equations

- Variable Definition: Percentage of heat and material balance equations based on actual data from prior plants.

- Data obtained from Darmouth reactor performance.

- Fermentation, ethanol purification, furfural recovery and feedstock handling data based on previously tested technology but with many differences.

- Use 40% for this.

Waste

- Variable Definition: Assessment by industry process engineers of difficulties with waste handling encountered during development.

- Plant designed to limit waste to solid landfill and vents. However, actual magnitude of waste problem or of local constraints unknown in practice.

- Allow 2.5.

Solids

- Variable Definition: Designates that a plant processes primarily solid feedstocks.
- Wood chips in solid feedstock.
- Use 1.

Performance Shortfall

o Intercept	85.77
o New Steps 2 x -9.69	-19.38
o Balance Equations 40 x .33	+13.2
o Waste 2.5 x 4.12	-10.3
o Solids 1 x -17.91	-17.91
	51.4

(2) With Demonstration Unit

What can be gained in the increase in expected performance as a percent of design from building and operating the demonstration unit.

Performance Shortfall

o Intercept	85.77
o New Steps - Demonstration plant increases understanding of all steps in hydrolysis - reduce to zero.	Zero
o Balance Equations - Assume most heat and material balances can be confirmed during demonstration phase - increase to 90%.	+29.7
o Waste - Demonstration plant allows confirmation of assumptions about wastes generated. However, not site-specific - reduce to 1.0.	- 4.12
o Solids - Remains at 1	-17.19
	93.44

(3) With Site-Specific Study

What can be gained in the increase in expected performance as a percentage of design from carrying out a site-specific study.

Performance Shortfall

o Intercept	85.77
o New Steps - Remains at 2	-19.38
o Balance Equations - Remains at 40%	+13.2
o Waste - Allows site-specific environmental factors to be defined - reduce to 2.	- 8.24
o Solids - Remains at 1	-17.91
	53.44

(4) With Both

What can be gained in the increase in expected performance as a percent of design from both building and operating of a demonstration unit and completing the site-specific study.

Performance Shortfall

o Intercept	85.77
o New Steps - Zero	Zero
o Balance Equations 90%	29.7
o Waste - Zero	Zero
o Solids 1	17.91
	97.56

Description of Typical Site-Specific Study

A typical site-specific study would define four major items not included in the present conceptual design study:

(1) Identify all major technical and project execution issues requiring resolution before initiation of or during the design.

(2) Define all the necessary facilities (verify technical feasibility).

(3) Present an execution plan including schedule for engineering, procurement, and especially fabrication and construction.

(3) Present a realistic investment cost and project cash flow (verify commercial feasibility, allowing negotiation of realistic value for feedstock).

Some of the issues that would be addressed in a site-specific Phase 0 study of the first commercial plant for the hydrolysis technology would be:

(1) Engineering

- o basic design data and design codes for site
- o modifications for specific feedstocks, definitions of feedstock delivery, and product shipment systems
- o environmental and safety requirements

Details of Economic Analysis Calculations

The following pages explain the detailed economic calculations used in the Badger and SERI economic analysis. Footnotes follow the computer calculations to explain the method and assumptions used.

The pages of calculations are as follows:

Summary Sheet for Raw Data
Analysis of Revenues
Analysis of Costs of Sales
Investment Summary
Proforma Income Statement
Cash Flow Analysis
Plant Operating Cost Data
Cost Data During Construction

Finally, examples of the sensitivity analysis printout is given for the Badger and SERI based calculations.

Where major differences between the SERI and Badger parameters exist these are highlighted in the footnotes.

SERI E-0461 B A D G E R Date: 20-Sep-84

CONSTRUCTION RELATED DATA: Jan 84	Unit	Amount
Base year for Constant Dollars	date	Jan 84
Construction schedule	months	30
Starting date	date	Jan-85
Estimated capital costs	$MM	139.78
Land cost	$MM	1.00
Interest during construction	%	13.0
Investment tax credit	%	10.0
Other tax credits		
- Business Energy	%	10.0
	%	0.0
	%	0.0
Percent equity	%	100.0
Percent debt	%	0.0
Inflation rate	%	0.0
Escalation on capital	%	0.0
Monthly compounding	%	1.0000

OPERATING RELATED COSTS:	Unit	Amount
Inflation rate	%	0.0
Escalation on operating costs	%	0.0
Interest during plant operation	%	13.0
Working capital	$MM	8.50
Tax rate	%	45.0
Salvage % at end of operation period	%	10.0

Product sales	MM$/Yr:	77.48 +
Raw materials	MM$/Yr:	28.35
Operating expenses	MM$/Yr:	15.44 -

Gross income, 1984 basis 33.69

		Unit	Capacity Units /Year	Unit price $/Unit	Yearly costs MM$/yr
Products	ethanol	MMGals	27.50	1.80	49.50
	furfural	MMLbs	130.20	0.15	19.53
	electricity	MWHrs	176000	50.00	8.80
	landfill	metr tons	63333	-5.50	-0.35
Raw materials	wood chips	metr tons	590400	42.00	24.80
	sulfuric acid	metr tons	18155	65.00	1.18
	lime	metr tons	18383	35.00	0.64
	other cats & chems	$/yr	609800		0.61
	diesel oil	Gals	10000	1.00	0.01
	gasoline	MMGals	1.31	0.85	1.11
Operating costs	labor	MM$/yr	1.48		1.48
	supervision	MM$/yr	0.06		0.06
	direct overhead	%	40	lab+supvn	0.62
	maintenance	%	4	capital	5.59
				subtotal	7.75
	selling G & A	%	60	subtotal	4.65
	insur & taxes	%	2	capital	2.80
	royalty	$/yr	250000		0.25

Summary Sheet for Raw Data

Economic Assessment Data

Notes:

(1) Base Year - Inflation and escalation if included in the analysis begin in the base year.

(2) Starting Date - Depreciation calculations use the starting date as the basis.

(3) Estimated Capital Costs - This represents the total depreciable investment required. The method of estimating is given in Appendix VII and capital cost components are given in Section 5.0 of the main report.

(4) Land Cost - Land cost is nondepreciable and is included in the economic calculations as a separate item.

(5) Interest During Construction - Interest during construction including past years is capitalized and included as total depreciable investment.

(6) Tax Credits - Total tax credits amount to 20% of depreciable capital investment. 10% from investment tax credit, 10% from business energy tax credit. SERI based calculations do not take the 10% business energy credit.

(7) Percent Equity - Badger calculations have been carried out on the basis of 100% equity. SERI based calculations use 70% equity, 30% debt.

(8) Inflation Rate - Badger calculations have used zero inflation rate. SERI based calculations use a 7% inflation rate.

(9) Escalation Rate on Capital - SERI have requested that an escalation rate of 1% on capital be used in the calculations. The Badger based calculation does not include escalation.

(10) Interest During Construction - Interest due during construction is compounded monthly (SERI calculation).

(11) Escalation Rate on Operations - SERI have requested that an escalation rate of 1.5% on operations be used in the calculations. The Badger based calculation does not include escalation.

(12) Working Capital - Working capital is computed using the following formula:

30 Days Accounts Receivable
+Cash (10% Accounts Payable)
+15 Days Inventories
+30 Days Maintenance and Spares
-30 Days Wages
-30 Days Raw Materials
-30 Days Maintenance and Labor
-90 Days Taxes

(13) Tax Rate - The tax rate used in calculations is given by SERI.

(14) Salvage - A 10% salvage value at the end of the project is taken in the Badger calculation. The SERI calculation assumes zero salvage value.

(15) Product Costs - These costs are FOB plant.

(16) Product Volumes - The ethanol production volume at 100% design is 26.2 million gallons per year (nominal capacity is 25 million gallons). The figure given here of 27.5 million gallons includes 5% gasoline (purchased as 87% octane gasoline) blended as denaturant.

Analysis of Revenues

Notes: (1) Year Start and Number - Plant construction begins in year zero and is complete mid-way through year two. The correspondence with calendar years is indicated.

(2) Plant Availability - Plant availability is defined as that portion of a year that plant is available for operation. Since project duration is assumed to be 15 years plant is available for only half of year 17.

(3) Stream Factor - Stream factor is defined as that percentage of design capacity at which the plant operates during operating year. This actual production will be stream factor times plant availability times design capacity. The SERI based calculation uses a constant stream factor of 100% from startup. The Badger analysis uses a gradual increase over three years: 50%, 80%, 100%, etc. The figures shown above reflect the average stream factor for the year, e.g., (50%+80%) — 2 = 65%.

(4) Inflation and Escalation - This analysis is prepared for constant dollar DCF accordingly for the Badger calculation zero inflation assumed. Inflation index is expressed relative to year -1.

(5) Product Volumes - Actual production is design capacity modified by plant availability and stream factor.

(6) Selling Prices - Constant dollar analysis for determining DCF 1984 dollars. Land fill is indicated as a negative value because charges will be incurred for collection and disposal by outside contractor.

(7) Total Revenue - Total revenue line is carried over to Proforma Income Statement.

SERI E-0461

BADGER

Date: 20-Sep-84

ANALYSIS OF REVENUES

Year Start:	Jan-84	Jan-85	Jan-86	Jan-87	Jan-88	Jan-89	Jan-90	Jan-91	Jan-92	Jan-93	Jan-94	Jan-95	Jan-96	Jan-97	Jan-98	Jan-99	Jan-2000	Jan-2001	Jan-2002
Year No. :	-1	0	1	2	3	4	5	6	7	8	9	10	11	12	13	14	15	16	17
Plant availability	0%	0%	0%	50%	100%	100%	100%	100%	100%	100%	100%	100%	100%	100%	100%	100%	100%	100%	50%
Stream factor	0%	0%	0%	50%	65%	90%	100%	100%	100%	100%	100%	100%	100%	100%	100%	100%	100%	100%	100%
Inflation + Escalation, effect on operating costs:	1.00	1.00	1.00	1.00	1.00	1.00	1.00	1.00	1.00	1.00	1.00	1.00	1.00	1.00	1.00	1.00	1.00	1.00	1.00
PRODUCT VOLUMES	**Unit**																		
Ethanol	MMGals	0.00	0.00	0.00	6.88	17.86	24.75	27.50	27.50	27.50	27.50	27.50	27.50	27.50	27.50	27.50	27.50	27.50	27.50	13.75
Furfural	MMLbs	0.00	0.00	0.00	32.55	84.63	117.18	130.20	130.20	130.20	130.20	130.20	130.20	130.20	130.20	130.20	130.20	130.20	130.20	65.10
Electricity	MWhrs	0	0	0	44000	114400	158400	176000	176000	176000	176000	176000	176000	176000	176000	176000	176000	176000	176000	88000
Landfill	metr tons	0	0	0	15833	41166	57000	63333	63333	63333	63333	63333	63333	63333	63333	63333	63333	63333	63333	31667
SELLING PRICES	**$/....**																		
Ethanol	MMGals	1.80	1.80	1.80	1.80	1.80	1.80	1.80	1.80	1.80	1.80	1.80	1.80	1.80	1.80	1.80	1.80	1.80	1.80	1.80
Furfural	MMLbs	0.15	0.15	0.15	0.15	0.15	0.15	0.15	0.15	0.15	0.15	0.15	0.15	0.15	0.15	0.15	0.15	0.15	0.15	0.15
Electricity	MWhrs	50.00	50.00	50.00	50.00	50.00	50.00	50.00	50.00	50.00	50.00	50.00	50.00	50.00	50.00	50.00	50.00	50.00	50.00	50.00
Landfill	metr tons	-5.50	-5.50	-5.50	-5.50	-5.50	-5.50	-5.50	-5.50	-5.50	-5.50	-5.50	-5.50	-5.50	-5.50	-5.50	-5.50	-5.50	-5.50	-5.50
REVENUES	**MM$**																		
Ethanol		0.0	0.0	0.0	12.4	32.2	44.6	49.5	49.5	49.5	49.5	49.5	49.5	49.5	49.5	49.5	49.5	49.5	49.5	24.8
Furfural		0.0	0.0	0.0	4.9	12.7	17.6	19.5	19.5	19.5	19.5	19.5	19.5	19.5	19.5	19.5	19.5	19.5	19.5	9.8
Electricity		0.0	0.0	0.0	2.2	5.7	7.9	8.8	8.8	8.8	8.8	8.8	8.8	8.8	8.8	8.8	8.8	8.8	8.8	4.4
Landfill		0.0	0.0	0.0	-0.1	-0.2	-0.3	-0.3	-0.3	-0.3	-0.3	-0.3	-0.3	-0.3	-0.3	-0.3	-0.3	-0.3	-0.3	-0.2
	TOTALS	0.0	0.0	0.0	19.4	50.4	69.7	77.5	77.5	77.5	77.5	77.5	77.5	77.5	77.5	77.5	77.5	77.5	77.5	38.7

Analysis of Cost of Sales

Notes:

(1) Cost of Sales - These are divided into costs that behave as variable and costs that behave as fixed for ease in calculating cost of sales at reduced plant operating rates.

(2) Raw Material Quantities - These are discussed in text and prorated with fractions of reduced operating years.

(3) Unit Costs - These are discussed in the text and are in 1984 constant dollars.

(4) Fixed Costs - Fixed costs include direct labor and other items which might be considered variable. To be conservative it is assumed that these costs are fixed during all years at levels corresponding to 100% production.

(5) Total Cost of Sales - This is carried over to proforma income statement. This item includes straight line depreciation of depreciable assets for book purposes. This is adjusted to a tax basis for DCF calculations.

SERI E-0461

BADGER

Date: 20-Sep-84

ANALYSIS OF COSTS OF SALES

Year Start:		Jan-84	Jan-85	Jan-86	Jan-87	Jan-88	Jan-89	Jan-90	Jan-91	Jan-92	Jan-93	Jan-94	Jan-95	Jan-96	Jan-97	Jan-98	Jan-99	Jan-2000	Jan-2001	Jan-2002
Year No. :		-1	0	1	2	3	4	5	6	7	8	9	10	11	12	13	14	15	16	17
Plant availability		0%	0%	0%	50%	100%	100%	100%	100%	100%	100%	100%	100%	100%	100%	100%	100%	100%	100%	50%
Stream factor		0%	0%	0%	50%	65%	90%	100%	100%	100%	100%	100%	100%	100%	100%	100%	100%	100%	100%	100%
Inflation + Escalation, effect on operating costs:		1.00	1.00	1.00	1.00	1.00	1.00	1.00	1.00	1.00	1.00	1.00	1.00	1.00	1.00	1.00	1.00	1.00	1.00	1.00
RAW MATERIALS QUANTITIES																				
wood chips	metr tons	0	0	0	147600	383760	531360	590400	590400	590400	590400	590400	590400	590400	590400	590400	590400	590400	590400	295200
sulfuric acid	metr tons	0	0	0	4539	11801	16340	18155	18155	18155	18155	18155	18155	18155	18155	18155	18155	18155	18155	9078
lime	metr tons	0	0	0	4596	11949	16545	18383	18383	18383	18383	18383	18383	18383	18383	18383	18383	18383	18383	9192
other cats & chems		0.00	0.00	0.00	0.25	0.65	0.90	1.00	1.00	1.00	1.00	1.00	1.00	1.00	1.00	1.00	1.00	1.00	1.00	0.50
diesel oil	Gals	0	0	0	2500	6500	9000	10000	10000	10000	10000	10000	10000	10000	10000	10000	10000	10000	10000	5000
gasoline	MMGals	0.00	0.00	0.00	0.33	0.85	1.18	1.31	1.31	1.31	1.31	1.31	1.31	1.31	1.31	1.31	1.31	1.31	1.31	0.66
UNIT COSTS	$/....																			
wood chips	metr tons	42.00	42.00	42.00	42.00	42.00	42.00	42.00	42.00	42.00	42.00	42.00	42.00	42.00	42.00	42.00	42.00	42.00	42.00	42.00
sulfuric acid	metr tons	65.00	65.00	65.00	65.00	65.00	65.00	65.00	65.00	65.00	65.00	65.00	65.00	65.00	65.00	65.00	65.00	65.00	65.00	65.00
lime	metr tons	35.00	35.00	35.00	35.00	35.00	35.00	35.00	35.00	35.00	35.00	35.00	35.00	35.00	35.00	35.00	35.00	35.00	35.00	35.00
other cats & chems	/Yr	609800	609800	609800	609800	609800	609800	609800	609800	609800	609800	609800	609800	609800	609800	609800	609800	609800	609800	609800
diesel oil	Gallon	1.00	1.00	1.00	1.00	1.00	1.00	1.00	1.00	1.00	1.00	1.00	1.00	1.00	1.00	1.00	1.00	1.00	1.00	1.00
gasoline	Gallon	0.85	0.85	0.85	0.85	0.85	0.85	0.85	0.85	0.85	0.85	0.85	0.85	0.85	0.85	0.85	0.85	0.85	0.85	0.85
TOTALS	MM$																			
wood chips		0.0	0.0	0.0	6.2	16.1	22.3	24.8	24.8	24.8	24.8	24.8	24.8	24.8	24.8	24.8	24.8	24.8	24.8	12.4
sulfuric acid		0.0	0.0	0.0	0.3	0.8	1.1	1.2	1.2	1.2	1.2	1.2	1.2	1.2	1.2	1.2	1.2	1.2	1.2	0.6
lime		0.0	0.0	0.0	0.2	0.4	0.6	0.6	0.6	0.6	0.6	0.6	0.6	0.6	0.6	0.6	0.6	0.6	0.6	0.3
other cats & chems		0.0	0.0	0.0	0.2	0.4	0.5	0.6	0.6	0.6	0.6	0.6	0.6	0.6	0.6	0.6	0.6	0.6	0.6	0.3
diesel oil		0.0	0.0	0.0	.0	.0	.0	.0	.0	.0	.0	.0	.0	.0	.0	.0	.0	.0	.0	.0
gasoline		0.0	0.0	0.0	0.3	0.7	1.0	1.1	1.1	1.1	1.1	1.1	1.1	1.1	1.1	1.1	1.1	1.1	1.1	0.6
TOTAL VARIABLE COSTS		0.0	0.0	0.0	7.1	18.4	25.5	28.4	28.4	28.4	28.4	28.4	28.4	28.4	28.4	28.4	28.4	28.4	28.4	14.2
FIXED COSTS	Units, unit rates	MM$																		
labor	MM$/yr 1.48	0.00	0.00	0.00	0.74	1.48	1.48	1.48	1.48	1.48	1.48	1.48	1.48	1.48	1.48	1.48	1.48	1.48	1.48	0.74
supervision	MM$/yr 0.06	0.00	0.00	0.00	0.03	0.06	0.06	0.06	0.06	0.06	0.06	0.06	0.06	0.06	0.06	0.06	0.06	0.06	0.06	0.03
	subt 1	0.00	0.00	0.00	0.77	1.54	1.54	1.54	1.54	1.54	1.54	1.54	1.54	1.54	1.54	1.54	1.54	1.54	1.54	0.77
direct overhead	% subt 1 40	0.00	0.00	0.00	0.31	0.62	0.62	0.62	0.62	0.62	0.62	0.62	0.62	0.62	0.62	0.62	0.62	0.62	0.62	0.31
maintenance	% capital 4	0.00	0.00	0.00	2.80	5.59	5.59	5.59	5.59	5.59	5.59	5.59	5.59	5.59	5.59	5.59	5.59	5.59	5.59	2.80
insur & taxes	% capital 2	0.00	0.00	0.00	1.40	2.80	2.80	2.80	2.80	2.80	2.80	2.80	2.80	2.80	2.80	2.80	2.80	2.80	2.80	1.40
royalty	$/yr 250000	0.00	0.00	0.00	0.13	0.25	0.25	0.25	0.25	0.25	0.25	0.25	0.25	0.25	0.25	0.25	0.25	0.25	0.25	0.13
depreciation, (book)		0.00	0.00	0.00	4.51	9.02	9.02	9.02	9.02	9.02	9.02	9.02	9.02	9.02	9.02	9.02	9.02	9.02	9.02	4.51
TOTAL FIXED COSTS		0.00	0.00	0.00	9.91	19.81	19.81	19.81	19.81	19.81	19.81	19.81	19.81	19.81	19.81	19.81	19.81	19.81	19.81	9.91
TOTAL COSTS OF SALES		0.00	0.00	0.00	16.99	38.24	45.33	48.16	48.16	48.16	48.16	48.16	48.16	48.16	48.16	48.16	48.16	48.16	48.16	24.08

Investment Summary

Notes:

(1) Investment Summary - Contains a summary of all investment figures contained in other schedules.

(2) Gross Investment - Gross investment in plant and equipment corresponds to construction schedule of 30 months.

(3) Average Gross Investment - This is defined as the average of gross investment at the beginning and end of the operating year. It is used for the purpose of calculating a yearly ROI (simple) based on book (proforma) income.

(4) Depreciation Summary - Reflects accelerated depreciation for plant, equipment, buildings.

(5) Book Depreciation - This is 15 year straight line.

(6) Average Net Investment - This is defined as the average value of net investment at the beginning and end of the year (tax depreciated investment). It is used for calculating a notional interest charged to the proforma income statement. It is netted out for DCF calculation.

(7) Interest - Interest is charged to proforma income statement calculated at 13% of average net investment (tax basis).

SERI E-0461

BADGER

Date: 20-Sep-84

INVESTMENT SUMMARY

Year Start:	Jan-84	Jan-85	Jan-86	Jan-87	Jan-88	Jan-89	Jan-90	Jan-91	Jan-92	Jan-93	Jan-94	Jan-95	Jan-96	Jan-97	Jan-98	Jan-99	Jan-2000	Jan-2001	Jan-2002
Year No. :	-1	0	1	2	3	4	5	6	7	8	9	10	11	12	13	14	15	16	17
Plant availability	0%	0%	0%	50%	100%	100%	100%	100%	100%	100%	100%	100%	100%	100%	100%	100%	100%	100%	50%

GROSS INVESTMENT

Plant and Equipment	0.00	55.91	111.82	139.78	139.78	139.78	139.78	139.78	139.78	139.78	139.78	139.78	139.78	139.78	139.78	139.78	139.78	139.78	139.78
Land	0.00	1.00	1.00	1.00	1.00	1.00	1.00	1.00	1.00	1.00	1.00	1.00	1.00	1.00	1.00	1.00	1.00	1.00	1.00
Buildings and other	Included with Plant and Equipment																		
Working capital	0.00	0.00	0.00	8.50	8.50	8.50	8.50	8.50	8.50	8.50	8.50	8.50	8.50	8.50	8.50	8.50	8.50	8.50	0.00
Total gross investment	0.00	56.91	112.82	149.28	149.28	149.28	149.28	149.28	149.28	149.28	149.28	149.28	149.28	149.28	149.28	149.28	149.28	149.28	140.78
Average gross investment	0.00	28.46	84.37	131.05	149.28	149.28	149.28	149.28	149.28	149.28	149.28	149.28	149.28	149.28	149.28	149.28	149.28	149.28	145.03

DEPRECIATION SUMMARY

TAX:																			
Plant and Equipment (1)	0.00	0.00	0.00	20.97	30.75	29.35	29.35	29.35	0.00	0.00	0.00	0.00	0.00	0.00	0.00	0.00	0.00	0.00	0.00
Buildings and other (2)	incl	incl	incl	incl	incl	incl	incl	incl	incl	incl	incl	incl	incl	incl	incl	incl	incl	incl	incl
Investment tax credit	0.00	0.00	0.00	27.95	0.00	0.00	0.00	0.00	0.00	0.00	0.00	0.00	0.00	0.00	0.00	0.00	0.00	0.00	0.00
Total	0.00	0.00	0.00	48.92	30.75	29.35	29.35	29.35	0.00	0.00	0.00	0.00	0.00	0.00	0.00	0.00	0.00	0.00	0.00
AVERAGE TAX DEPRECIATION	0.00	0.00	0.00	24.46	39.84	30.05	29.35	29.35	14.68	0.00	0.00	0.00	0.00	0.00	0.00	0.00	0.00	0.00	0.00
ACCUMULATED AVG. TAX DEPRECIATION	0.00	0.00	0.00	24.46	64.30	94.35	123.71	153.06	167.74	167.74	167.74	167.74	167.74	167.74	167.74	167.74	167.74	167.74	167.74

BOOK DEPRECIATION

Plant and Equipment	0.00	0.00	0.00	4.51	9.02	9.02	9.02	9.02	9.02	9.02	9.02	9.02	9.02	9.02	9.02	9.02	9.02	9.02	4.51
Buildings and other	0.00	0.00	0.00	incl	incl	incl	incl	incl	incl	incl	incl	incl	incl	incl	incl	incl	incl	incl	incl
Total	0.00	0.00	0.00	4.51	9.02	9.02	9.02	9.02	9.02	9.02	9.02	9.02	9.02	9.02	9.02	9.02	9.02	9.02	4.51
Average Net Investment (Tax basis)	0.00	28.46	84.87	106.59	84.98	54.93	25.57	0.00	0.00	0.00	0.00	0.00	0.00	0.00	0.00	0.00	0.00	0.00	0.00
Interest for income statement	0.00	0.00	0.00	13.86	11.05	7.14	3.32	0.00	0.00	0.00	0.00	0.00	0.00	0.00	0.00	0.00	0.00	0.00	0.00
Interest rate: 13 %																			

NOTES: (1) Assumed depreciation basis is five years, at resp. 15, 22, 21, 21, and 21 %
(2) Included with Plant and Equipment

Proforma Income Statement

Notes: (1) Proforma Income Statement - This is produced to indicate the incremental impact of this project on the income statement of an existing company. This statement contains two major departures from DCF analysis: interest charged at a rate of 13% of the average net investment (tax basis) during operating year; and income tax is based on an income reflecting national interest. Tax is allowed to be negative because it assumes that the company operating the facility will be capable of employing tax losses.

(2) Revenues and Cost of Sales - This is taken directly from supporting schedule.

(3) Distribution - It is uncommon for a venture of this kind to simply produce product FOB plant. Generally, it will have distribution expenses and investment associated with distribution equipment. Since this is site-specific and dependent on specific customer bases it is not included in the present calculation. Selling price is thus FOB plant.

(4) Selling G and A - This is the general and administrative overhead costs of production.

SEKI E-0461

BADGER

Date: 20-Sep-84

PRO-FORMA INCOME STATEMENT

Year Start:	Jan-84	Jan-85	Jan-86	Jan-87	Jan-88	Jan-89	Jan-90	Jan-91	Jan-92	Jan-93	Jan-94	Jan-95	Jan-96	Jan-97	Jan-98	Jan-99	Jan-2000	Jan-2001	Jan-2002
Year No. :	-1	0	1	2	3	4	5	6	7	8	9	10	11	12	13	14	15	16	17
Revenues	0.00	0.00	0.00	19.17	50.5a	69.72	77.48	77.48	77.48	77.48	77.4a	77.48	77.48	77.48	77.48	77.48	77.48	77.48	38.74
Cost of sales	0.00	0.00	0.00	16.99	36.24	45.33	46.16	46.16	48.16	46.16	48.16	46.1a	48.1a	46.16	46.16	48.16	48.16	48.16	24.08
Gross profit	0.00	0.00	0.00	2.18	12.17	24.40	29.32	29.32	29.32	29.32	29.32	29.32	29.32	29.32	29.32	29.32	29.32	29.32	14.66
Distribution	0.00	0.00	0.00	0.00	0.00	0.00	0.00	0.00	0.00	0.00	0.00	0.00	0.00	0.00	0.00	0.00	0.00	0.00	0.00
Direct profit	0.00	0.00	0.00	2.18	12.17	24.40	29.32	29.32	29.32	29.32	29.32	29.32	29.32	29.32	29.32	29.32	29.32	29.32	14.66
Selling, G & A	0.00	0.00	0.00	2.32	4.65	4.65	4.65	4.65	4.65	4.65	4.65	4.65	4.65	4.65	4.65	4.65	4.65	4.65	2.32
Profit before interest and tax	0.00	0.00	0.00	0.05	7.47	19.74	24.67	24.67	24.67	24.67	24.67	24.67	24.67	24.67	24.67	24.67	24.67	24.67	12.33
Interest, on avg net investment	0.00	0.00	0.00	13.56	11.65	7.11	2.32	0.00	0.00	0.00	0.00	0.00	0.00	0.00	0.00	0.00	0.00	0.00	0.00
Net profit before tax	0.00	0.00	0.00	-12.80	-7.57	12.62	21.34	24.67	24.67	24.67	24.67	24.67	24.67	24.67	24.67	24.67	24.67	24.67	12.33
Pro-forma Tax at 45%	0.00	0.00	0.00	-5.21	-1.61	5.68	9.60	11.10	11.10	11.10	11.10	11.10	11.10	11.10	11.10	11.10	11.10	11.10	5.55
Net Income, MMS	0.00	0.00	0.00	-7.59	-4.97	6.94	11.74	13.57	13.57	13.57	13.57	13.57	13.57	13.57	13.57	13.57	13.57	13.57	6.78
GROSS AVG. INVESTMENT.	0.00	28.48	84.97	121.35	149.28	149.28	149.28	149.28	149.28	149.28	149.28	149.28	149.28	149.28	149.28	149.28	149.28	149.28	145.03
ROI (Net Income/Gross Investment) %	0.0%	0.0%	0.0%	-5.0%	-3.3%	4.6%	7.9%	9.1%	9.1%	9.1%	9.1%	9.1%	9.1%	9.1%	9.1%	9.1%	9.1%	9.1%	4.7%

Cash Flow Analysis

Notes: (1) Sources and Uses Statement - This is used to calculate IRR discounted cash flow internal rate of return). This analysis assumes 100% equity, that is, the IRR reflects a rate of return for total capital consumed.

(2) Net Profit Before Taxes - This is taken directly from the proforma income statement. Accordingly, NPBT have notional interest and book depreciation subtracted from it, which are noncash expenses; these are added back in within the statement.

(3) Accelerated Tax Depreciation - This is employed as discussed in the text. It is assumed in the Badger analysis that the tax benefit of accelerated depreciation can be utilized by the venture owning the facility. (Otherwise, there would be a tax loss carry forward, as used in the SERI based analysis.)

(4) Adjusted Profit Before Taxes - This is calculated to determine the actual taxes due before investment and business energy tax credits. It should be noted that interest s not deducted for determination of taxes. It is assumed that the hurdle rate for the IRR will reflect an overall cost of capital for an existing operating company (i.e., capital structure, debt, equity, and interest for the existing entity are reflected in a cost of capital). The recovery of $13.98 mm in salvage value is a taxable event in year 17.

(5) Tax Credits - An investment tax credit of 10% of plant investment is assumed. In the Badger analysis an additional 10% business energy credit is also taken during the first operating year. It is assumed that this venture would qualify due to its nature. The DCF is given credit for the tax credits during the first operating year (see note 2).

(6) Uses of Funds - This is derived from "Investment Summary" schedule. Working capital of $8.5 million is required in the first operating year and is recovered in the last operating year. Land is treated similarly.

(7) Net Cash Flow - This reflects total capital flowing in and out of the venture. It reflects a total return on capital (see note 1).

(8) Cumulative Cash Flow - Cumulative cash flow is used to calculate simply payback period, again assuming that the owning company can utilize all tax losses incurred (Badger basis).

SERI E-0481

BADGER

Date: 20-Sep-84

CASH FLOW ANALYSIS

Year Start:		Jan-84	Jan-85	Jan-86	Jan-87	Jan-88	Jan-89	Jan-90	Jan-91	Jan-92	Jan-93	Jan-94	Jan-95	Jan-96	Jan-97	Jan-98	Jan-99	Jan-2000	Jan-2001	Jan-2002
Year No. :		-1	0	1	2	3	4	5	6	7	8	9	10	11	12	13	14	15	16	17
SOURCES OF FUNDS																				
Net Profit before Taxes		0.00	0.00	0.00	-13.80	-3.57	12.62	21.34	24.67	24.67	24.67	24.67	24.67	24.67	24.67	24.67	24.67	24.67	24.67	12.33
Add: Gain/Loss on Salvage (1)		0.00	0.00	0.00	0.00	0.00	0.00	0.00	0.00	0.00	0.00	0.00	0.00	0.00	0.00	0.00	0.00	0.00	0.00	13.98
Add: Interest expense		0.00	0.00	0.00	13.80	11.05	7.14	3.32	0.00	0.00	0.00	0.00	0.00	0.00	0.00	0.00	0.00	0.00	0.00	0.00
Add: Book depreciation		0.00	0.00	0.00	4.51	9.02	9.02	9.02	9.02	9.02	9.02	9.02	9.02	9.02	9.02	9.02	9.02	9.02	9.02	4.51
Deduct: Tax depreciation		0.00	0.00	0.00	-28.97	-30.75	-29.35	-29.35	-29.35	0.00	0.00	0.00	0.00	0.00	0.00	0.00	0.00	0.00	0.00	0.00
Adjusted Profit before Taxes		0.00	0.00	0.00	-18.41	-14.35	-0.58	4.33	4.33	33.69	33.69	33.69	33.69	33.69	33.69	33.69	33.69	33.69	33.69	30.82
Deduct: Income Taxes at	45%	0.00	0.00	0.00	-7.38	-5.82	-0.23	1.95	1.95	15.16	15.16	15.16	15.16	15.16	15.16	15.16	15.16	15.16	15.16	13.87
Adjusted net income		0.00	0.00	0.00	-9.92	-7.84	-0.32	2.38	2.38	18.53	18.53	18.53	18.53	18.53	18.53	18.53	18.53	18.53	18.53	16.95
Add: Tax depreciation		0.00	0.00	0.00	28.97	30.75	29.35	29.35	29.35	0.00	0.00	0.00	0.00	0.00	0.00	0.00	0.00	0.00	0.00	0.00
Add: Investment tax credit		0.00	0.00	0.00	27.96	0.00	0.00	0.00	0.00	0.00	0.00	0.00	0.00	0.00	0.00	0.00	0.00	0.00	0.00	0.00
TOTAL SOURCES	MAR	0.00	0.00	0.00	39.90	22.91	29.03	31.74	31.74	18.53	18.53	18.53	18.53	18.53	18.53	18.53	18.53	18.53	18.53	16.95
USES OF FUNDS																				
Plant and Equipment		0.00	55.91	55.91	27.96	0.00	0.00	0.00	0.00	0.00	0.00	0.00	0.00	0.00	0.00	0.00	0.00	0.00	0.00	0.00
Land		0.00	1.00	0.00	0.00	0.00	0.00	0.00	0.00	0.00	0.00	0.00	0.00	0.00	0.00	0.00	0.00	0.00	0.00	-1.00
Buildings and other		incl	incl	incl	incl	incl	incl	incl	incl	incl	incl	incl	incl	incl	incl	incl	incl	incl	incl	incl
Working Capital		0.00	0.00	0.00	8.50	0.00	0.00	0.00	0.00	0.00	0.00	0.00	0.00	0.00	0.00	0.00	0.00	0.00	0.00	-8.50
TOTAL USES	MAR	0.00	56.91	55.91	36.46	0.00	0.00	0.00	0.00	0.00	0.00	0.00	0.00	0.00	0.00	0.00	0.00	0.00	0.00	-9.50
NET CASH FLOW	MAR	0.00	-56.91	55.91	3.44	22.91	29.03	31.74	31.74	18.53	18.53	18.53	18.53	18.53	18.53	18.53	18.53	18.53	18.53	26.45
CUMULATIVE CASH FLOW	MAR	0.00	-56.91	-112.82	-109.38	-86.47	-57.44	-25.70	6.04	24.57	43.09	61.62	80.15	98.68	117.20	135.73	154.26	172.79	191.32	217.77
IRR	15.15%																			

NOTES: (1) Assumes a salvage value of
10% of current plant costs,
minus tax of 45%
Also includes gain or loss
from the sale of land.

Plant Operating Cost Date

Notes: (1) Plant Operating Cost Data - This is a schedule which calculates IRR in direct manner. This analysis ties completely with the IRR calculation in previous schedules but simply eliminates interim or redundant calculations.

(2) Overall cash Flow (Single) - This is the cash flow of the venture under the assumption that the project is a single venture and use of tax losses and tax credits must therefore be deferred until the single venture itself consumes them. This basis is used in the SERI based economic analysis.

(3) Overall cash Flow (Multiple) - This is identical to the cash flow determined in earlier schedules. It assumes that the plant is operated by an existing company with other profitable projects against which losses and tax credits can be written off as soon as they occur.

SERI /E-0461

BADGER

Date: 20-Sep-84

PLANT OPERATING COST DATA

Year Starts	Jan-84	Jan-85	Jan-86	Jan-87	Jan-88	Jan-89	Jan-90	Jan-91	Jan-92	Jan-93	Jan-94	Jan-95	Jan-96	Jan-97	Jan-98	Jan-99	Jan-2000	Jan-2001	Jan-2002
Year No. :	-1	0	1	2	3	4	5	6	7	8	9	10	11	12	13	14	15	16	17
Plant availability	0%	0%	0%	50%	100%	100%	100%	100%	100%	100%	100%	100%	100%	100%	100%	100%	100%	100%	50%
Stream factor	0%	0%	0%	100%	100%	100%	100%	100%	100%	100%	100%	100%	100%	100%	100%	100%	100%	100%	100%
Inflation + Escalation, effect on operating costs	1.00	1.09	1.16	1.26	1.39	1.50	1.61	1.77	1.92	2.08	2.26	2.45	2.66	2.89	3.13	3.40	3.69	4.00	4.34
Product sales	0.00	0.00	0.00	39.47	65.56	92.94	100.34	106.41	118.71	128.83	139.74	151.62	164.51	178.49	193.67	210.13	227.99	247.37	134.20
Raw material costs	0.00	0.00	0.00	18.11	39.34	43.63	46.26	50.19	54.46	59.06	64.11	69.56	75.47	81.86	88.80	96.39	104.59	113.48	61.56
Gross margin	0.00	0.00	0.00	21.36	46.36	50.30	54.08	56.22	64.25	69.77	75.64	82.07	89.04	96.63	104.87	113.73	123.40	133.89	72.63
Operating costs	0.00	0.00	0.00	9.85	21.40	23.22	25.19	27.33	29.66	32.18	34.91	37.86	41.06	44.54	48.30	52.50	56.96	61.80	33.53
Gross income	0.00	0.00	0.00	11.50	24.96	27.08	29.39	31.88	34.59	37.53	40.73	44.19	47.96	52.02	56.44	61.24	66.44	72.09	39.11
Depreciation $/yr	0	0	0	15	22	21	21	21	0	0	0	0	0	0	0	0	0	0	0
Depreciation $/yr	0.00	0.00	0.00	26.62	38.31	36.57	36.57	36.57	0.00	0.00	0.00	0.00	0.00	0.00	0.00	0.00	0.00	0.00	0.00
Principal paid	0.00	0.00	0.00	1.88	3.76	3.76	3.76	3.76	3.76	3.76	3.76	3.76	3.76	3.76	3.76	3.76	3.76	3.76	3.76
Outstanding debt	0.00	0.00	0.00	56.43	52.67	48.90	45.14	41.38	37.62	33.86	30.09	26.33	22.57	18.81	15.05	11.29	7.52	3.76	.00
Interest paid during plant operation	0.00	0.00	0.00	5.67	6.65	6.36	5.87	5.38	4.89	4.40	3.91	3.42	2.93	2.45	1.96	1.47	0.98	0.49	.00
Net taxable income	0.00	0.00	0.00	-18.28	-20.19	-15.84	-13.05	-10.06	29.70	33.13	36.81	40.76	45.01	49.57	54.48	59.77	65.46	71.60	39.11
Cumulative taxable income	0.00	0.00	0.00	-18.28	-38.48	-54.32	-67.37	-77.44	-47.73	-14.60	22.21	62.98	107.98	157.56	212.04	271.81	337.27	408.87	447.98
Tax basis	0.00	0.00	0.00	-18.28	-38.48	-54.32	-67.37	-77.44	-47.73	-14.60	22.21	62.98	107.98	157.56	212.04	271.81	337.27	408.87	447.98
Tax payable before credits	0.00	0.00	0.00	0.00	0.00	0.00	0.00	0.00	0.00	0.00	10.00	18.34	20.25	22.31	24.52	26.90	29.46	32.22	17.60
Tax credit remaining	17.41	17.41	17.41	17.41	17.41	17.41	17.41	17.41	17.41	17.41	7.42	0.00	0.00	0.00	0.00	0.00	0.00	0.00	0.00
Tax actually paid	0.00	0.00	0.00	0.00	0.00	0.00	0.00	0.00	0.00	0.00	0.00	10.93	20.25	22.31	24.52	26.90	29.46	32.22	17.60
Construction cash flow		-44.55	-47.30	-25.05															
Operations cash flow	0.00	0.00	0.00	-3.55	14.35	16.96	19.76	22.74	25.94	29.37	33.05	26.08	20.99	23.50	26.20	29.11	32.24	35.62	50.50
OVERALL CASH FLOW (Single) I&A 15%	0.00	-44.55	-47.30	-27.60	14.35	16.96	19.76	22.74	25.94	29.37	33.05	26.08	20.99	23.50	26.20	29.11	32.24	35.62	50.50

Net taxable income		0.00	0.00	0.00	-18.28	-20.19	-15.84	-13.05	-10.06	29.70	33.13	36.81	40.76	45.01	49.57	54.48	59.77	65.46	71.60	39.11
Tax payable before credits	45%	0.00	0.00	0.00	-8.23	-9.09	-7.13	-5.87	-4.53	13.37	14.91	16.57	18.34	20.25	22.31	24.52	26.90	29.46	32.22	17.60
Tax credit		0.00	0.00	0.00	17.41	0.00	0.00	0.00	0.00	0.00	0.00	0.00	0.00	0.00	0.00	0.00	0.00	0.00	0.00	0.00
Tax actually paid		0.00	0.00	0.00	-25.64	-9.09	-7.13	-5.87	-4.53	13.37	14.91	16.57	18.34	20.25	22.31	24.52	26.90	29.46	32.22	17.60
Construction cash flow		0.00	-44.55	-47.30	-25.05	0.00	0.00	0.00	0.00	0.00	0.00	0.00	0.00	0.00	0.00	0.00	0.00	0.00	0.00	0.00
Operations cash flow		0.00	0.00	0.00	23.10	23.44	24.09	25.63	27.27	12.58	14.46	16.49	18.66	20.99	23.50	26.20	29.11	32.24	35.62	50.50
OVERALL CASH FLOW (Built 3/1 I&A 16%	16%	0.00	-44.55	-47.30	-1.96	23.44	24.09	25.63	27.27	12.58	14.46	16.49	18.66	20.99	23.50	26.20	29.11	32.24	35.62	

Cost Data During Construction

Notes:

(1) Monthly Drawdown - Funds to cover construction, land, tax, and interest payments are paid in equal amounts each month throughout the construction phase.

(2) Tax Credits - Tax credits allowed are taken as 10% investment tax credit plus 10% business energy credit, the percentage being of the total depreciable investment.

(3) The Badger Analysis has been conducted using 100% equity.

(4) Cost Data During Construction - Covers all costs including interest on loans for construction and land purchase incurred during the construction phase which can be capitalized. If construction ends sometime during a year, the proportion of interest charges incurred in the fraction of the year representing the end of the construction phase can be capitalized.

(5) Costs of Plant - Covers depreciable investment in plant and equipment including capitalized interest on loans.

(6) Costs of Land - Land is nondepreciable.

SEMI E-0401

BABBER

Date: 20-Sep-84

COST DATA DURING CONSTRUCTION

Overall by year 1985	1986	1987	Sum		Month Date:	Jan-84	Feb-84	Mar-84	Apr-84	May-84	Jun-84	Jul-84	Aug-84	Sep-84	Oct-84	Nov-84	Dec-84	Jan-85	Jan-85	Mar-85	Apr-85	May-85
					Month No. :	-12	-11	-10	-9	-8	-7	-6	-5	-4	-3	-2	-1	0	1	2	3	4
					Inflation + Escalation	1.00	1.01	1.01	1.02	1.03	1.03	1.04	1.05	1.05	1.06	1.07	1.07	1.08	1.09	1.09	1.10	1.11
					COSTS OF PLANT																	
43.80	47.30	25.05	116.15		Drawdown on equity																	
18.77	20.27	10.74	49.78		Drawdown on loan													3.52	3.55	3.57	3.59	3.61
					Cumulative loan													1.51	1.52	1.53	1.54	1.55
1.51	3.85	2.94	8.10		Interest on loan	0.00	0.00	0.00	0.00	0.00	0.00	0.00	0.00	0.00	0.00	0.00	0.00	1.51	3.03	4.56	6.10	7.65
63.87	71.42	38.73	174.03	subtotal														0.02	0.03	0.05	0.07	0.08
					COSTS OF LAND																	
0.76	0.00	0.00	0.76		Land equity																	
0.32	0.00	0.00	0.32		Loan for land													0.76				
0.04	0.04	0.03	0.11		Interest on land loan													0.32				
1.12	0.04	0.03	1.19	subtotal														.00	.00	.00	.00	.00
																		0.02	0.04	0.05	0.07	0.09
65.00	71.47	38.75	175.22	total investment																		

Drawdown on equity		116.15
Drawdown on loan		49.78
Interest for plant		8.10
Interest for land		0.11
TOTAL DEPRECIABLE INVESTMENT	MAX:	174.14
Maximum TAX CREDIT 4% 10%	MAX:	17.41
Drawdown on loan		49.78
Interest on loan		8.10
Loan for land		0.32
Interest on land loan		0.11
TOTAL CONSTRUCTION DEBT		58.31

SERI E-0461

BADGER

Date: 20-Sep-84

Jun-85 5	Jul-85 6	Aug-85 7	Sep-85 8	Oct-85 9	Nov-85 10	Dec-85 11	Jan-86 12	Jan-86 13	Mar-86 14	Apr-86 15	May-86 16	Jun-86 17	Jul-86 18	Aug-86 19	Sep-86 20	Oct-86 21	Nov-86 22	Dec-86 23	Jan-87 24	Feb-87 25	Mar-87 26	Apr-87 27	May-87 28	Jun-87 29
1.12	1.12	1.13	1.14	1.14	1.15	1.16	1.17	1.17	1.18	1.19	1.20	1.20	1.21	1.22	1.23	1.24	1.24	1.25	1.26	1.27	1.28	1.28	1.29	1.30
3.64	3.66	3.68	3.71	3.73	3.76	3.78	3.80	3.83	3.85	3.88	3.90	3.93	3.95	3.98	4.00	4.03	4.06	4.08	4.11	4.14	4.16	4.19	4.22	4.24
1.56	1.57	1.58	1.59	1.60	1.61	1.62	1.63	1.64	1.65	1.66	1.67	1.68	1.69	1.71	1.72	1.73	1.74	1.75	1.76	1.77	1.78	1.80	1.81	1.82
9.20	10.77	12.35	13.94	15.54	17.15	18.77	20.40	22.04	23.69	25.36	27.03	28.71	30.41	32.11	33.83	35.55	37.29	39.04	40.80	42.58	44.36	46.15	47.96	49.78
0.10	0.12	0.13	0.15	0.17	0.19	0.20	0.22	0.24	0.26	0.27	0.29	0.31	0.33	0.35	0.37	0.39	0.40	0.42	0.44	0.46	0.48	0.50	0.52	0.54
.00	.00	.00	.00	.00	.00	.00	.00	.00	.00	.00	.00	.00	.00	.00	.00	.00	.00	.00	.00	.00	.00	.00	.00	.00
0.10	0.12	0.14	0.15	0.17	0.19	0.21	0.22	0.24	0.26	0.28	0.30	0.31	0.33	0.35	0.37	0.39	0.41	0.43	0.45	0.46	0.48	0.50	0.52	0.54

A summary of the SERI based economic calculations is given in the following pages.

SERI ECONOMIC PARAMETERS

Raw Data

Calculation Summary

and

Sensitivity Analyses

(Base Case)

SERI E-0464 B A D G E R Date: 20-Sep-84

CONSTRUCTION RELATED DATA: Jan 84	Unit	Amount
Base year for Constant Dollars	date	Jan 84
Construction schedule	months	30
Starting date	date	Jan 85
Estimated capital costs	$MM	139.70
Land cost	$MM	1.00
Interest during construction	%	13.0
Investment tax credit	%	10.0
Other tax credits		
- Business Energy	%	0.0
	%	0.0
	%	0.0
[illegible]	%	[illegible]
[illegible]		[illegible]
[illegible]	%	[illegible]
Escalation on capital	%	1.0
Monthly compounding	%	1.0064

OPERATING RELATED COSTS:	Unit	Amount
Inflation rate	%	7.0
Escalation on operating costs	%	1.5
Interest during plant operation	%	13.0
Working capital	$MM	0.50
Tax rate	%	45.0
Salvage % at end of operation period	%	0.0

Product sales	MM$/yr:	[illegible]
Raw materials	MM$/yr:	[illegible]
Operating expenses	MM$/yr:	15.44

Gross income, 1984 basis 18.01

		Unit	Capacity Units /Year	Unit price $/Unit	Yearly costs MM$/yr
Product	ethanol	MMgals	22.50	1.23	[illegible]
	furfural	MMlbs	130.20	0.15	19.53
	electricity	MMlbs	176000	50.00	[illegible]
	landfill	metr tons	63333	5.50	0.35
Raw materials	wood chips	metr tons	590400	42.00	24.80
	sulfuric acid	metr tons	18155	65.00	1.18
	lime	metr tons	18383	35.00	0.64
	other cats & chems	$/yr	609800		0.61
	diesel oil	bals	10000	1.00	0.01
	gasoline	MMgals	1.31	0.85	1.11
Operating costs	labor	MM$/yr	1.48		1.48
	supervision	MM$/yr	0.06		0.06
	direct overhead	%	40	lab+supvn	0.62
	maintenance	%	4	capital	5.59
				subtotal	7.75
	selling G & A	%	60	[illegible]	4.65
	insur & taxes	%	2	[illegible]	2.80
	royalty	$/yr	250000		0.25

SERI L-0461 B A D G E R Date: 20-Sep-84

INTERNAL RATE OF RETURN ON EQUITY, for the REFERENCE conditions
as a % : 15% for a Single Venture business structure.
18% for a Multiple Venture business structure.

SENSITIVITY ANALYSIS:

	IRR	Cost of wood chips in $/metric ton. (in B44)					
	15%	35	40	42	44	47	52
Selling	0.70	4%	2%	5%	-9%	-16%	-37%
price	1.00	13%	10%	8%	7%	5%	1%
of	1.23	18%	16%	15%	14%	12%	9%
Ethanol	1.50	24%	22%	21%	20%	18%	16%
(in B39)	1.80	30%	28%	27%	26%	25%	23%
$/US Gal	2.20	36%	35%	34%	33%	32%	30%

	IRR	Capital costs in MM$. (in N6)					
	15%	100	120	140	150	170	200
Selling	0.70	6%	1%	5%	-8%	17%	35%
price	1.00	17%	12%	8%	7%	4%	-2%
of	1.23	24%	19%	15%	13%	9%	5%
Ethanol	1.50	31%	25%	21%	19%	15%	11%
(in B39)	1.80	37%	32%	27%	25%	21%	17%
$/US Gal	2.20	44%	39%	34%	32%	28%	23%

Capital cost (in N6)	IRR	Furfural unit price (in B40)	IRR	Own money, % (in N14)	IRR
	15%		15%		15%
100.00	24%	0.10	8%	30	17%
120.00	19%	0.12	11%	50	16%
139.78	15%	0.15	15%	70	15%
150.00	13%	0.17	17%	80	14%
170.00	9%	0.20	20%	90	14%
200.00	5%	0.30	30%	100	13%

Working capital (in N26)	IRR	Electricity $/MWhr (in B41)	IRR	Inflation, % (in N17)	IRR
	15%		15%		15%
1.0	15%	30.00	11%	0	7%
8.5	15%	50.00	15%	7	15%
15.0	14%	100.00	22%	15	23%

Sensitivity of IRR versus:	Unit	Cost/ Unit	Relative index	
Cost of wood chips	$/mton	42.00	(6.86)	! ------
Selling price of ethanol	$/MMGal	1.23	13.91	! *********
Capital costs	MM$	139.78	(11.23)	! *********
Equity	%	70.00	(1.67)	! -
Furfural unit price	$/MMlbs	0.15	7.00	! ++++++
Working capital	MM$	8.50	(0.21)	! .
Electricity	$/MWhr	50.00	3.33	! +++
Inflation	%/Yr	8.50	3.28	! +++

PLANT OPERATING COST DATA

Year Starts	Jan-84	Jan-85	Jan-86	Jan-87	Jan-88	Jan-89	Jan-90	Jan-91	Jan-92	Jan-93	Jan-94	Jan-95	Jan-96	Jan-97	Jan-98	Jan-99	Jan-2000	Jan-2001	Jan-2002
Year No. :	-1	0	1	2	3	4	5	6	7	8	9	10	11	12	13	14	15	16	17
Plant availability	0%	0%	0%	50%	100%	100%	100%	100%	100%	100%	100%	100%	100%	100%	100%	100%	100%	100%	50%
Stream factor	0%	0%	0%	100%	100%	100%	100%	100%	100%	100%	100%	100%	100%	100%	100%	100%	100%	100%	100%
Inflation + Escalation, effect on operating costs	1.00	1.09	1.18	1.28	1.39	1.50	1.63	1.77	1.92	2.08	2.26	2.45	2.66	2.89	3.13	3.40	3.69	4.00	4.34
Product sales	0.00	0.00	0.00	39.82	86.42	93.76	101.73	110.38	119.76	129.94	140.99	152.97	165.97	180.08	195.39	212.00	230.02	249.57	135.39
Raw material costs	0.00	0.00	0.00	18.11	39.29	42.63	46.26	50.19	54.46	59.08	64.11	69.56	75.47	81.88	88.84	96.39	104.59	113.48	61.56
Gross margin	0.00	0.00	0.00	21.72	47.12	51.13	55.47	60.19	65.31	70.86	76.88	83.42	90.51	98.20	106.55	115.60	125.43	136.09	73.83
Operating costs	0.00	0.00	0.00	9.86	21.40	23.22	25.19	27.33	29.66	32.18	34.91	37.88	41.10	44.59	48.38	52.50	56.96	61.80	33.53
Gross income	0.00	0.00	0.00	11.85	25.72	27.91	30.28	32.86	35.65	38.68	41.97	45.54	49.41	53.61	58.16	63.11	68.47	74.29	40.30
Depreciation Y/yr	0	0	0	15	22	21	21	21	0	0	0	0	0	0	0	0	0	0	0
Depreciation $/yr	0.00	0.00	0.00	26.12	38.31	36.57	36.57	36.57	0.00	0.00	0.00	0.00	0.00	0.00	0.00	0.00	0.00	0.00	0.00
Principal paid	0.00	0.00	0.00	1.88	3.76	3.76	3.76	3.76	3.76	3.76	3.76	3.76	3.76	3.76	3.76	3.76	3.76	3.76	3.76
Outstanding debt	0.00	0.00	0.00	54.43	52.67	48.90	45.14	41.38	37.62	33.86	30.09	26.33	22.57	18.81	15.05	11.29	7.52	3.76	.00
Interest paid during plant operation	0.00	0.00	0.00	3.67	6.85	6.36	5.87	5.38	4.89	4.40	3.91	3.42	2.93	2.45	1.96	1.47	0.98	0.49	.00
Net taxable income	0.00	0.00	0.00	-17.93	-19.43	-15.01	-12.15	-9.09	30.76	34.28	38.06	42.11	46.47	51.16	56.21	61.64	67.49	73.80	40.30
Cumulative taxable income	0.00	0.00	0.00	-17.93	-37.37	-52.38	-64.53	-73.62	-42.86	-8.59	29.47	71.58	118.05	169.22	225.42	287.06	354.55	428.35	468.66
Tax basis	0.00	0.00	0.00	-17.93	-37.37	-52.38	-64.53	-73.62	-42.86	-8.59	29.47	42.11	46.47	51.16	56.21	61.64	67.49	73.80	40.30
Tax payable before credits	0.00	0.00	0.00	0.00	0.00	0.00	0.00	0.00	0.00	0.00	13.26	18.95	20.91	23.02	25.29	27.74	30.37	33.21	18.14
Tax credit remaining	17.41	17.41	17.41	17.41	17.41	17.41	17.41	17.41	17.41	17.41	4.15	0.00	0.00	0.00	0.00	0.00	0.00	0.00	0.00
Tax actually paid	0.00	0.00	0.00	0.00	0.00	0.00	0.00	0.00	0.00	0.00	0.00	14.80	20.91	23.02	25.29	27.74	30.37	33.21	18.14
Construction cash flow		-44.55	-47.30	-25.05															
Operations cash flow	0.00	0.00	0.00	-2.19	15.12	17.79	20.65	23.72	27.00	30.52	34.29	23.55	21.80	24.38	27.15	30.14	33.36	36.83	51.15
OVERALL CASH FLOW (Single) IRR 15.10%	0.00	-44.55	-47.30	-27.25	15.12	17.79	20.65	23.72	27.00	30.52	34.29	23.55	21.80	24.38	27.15	30.14	33.36	36.83	51.15
Net taxable income	0.00	0.00	0.00	-17.93	-19.43	-15.01	-12.15	-9.09	30.76	34.28	38.06	42.11	46.47	51.16	56.21	61.64	67.49	73.80	40.30
Tax payable before credits 45%	0.00	0.00	0.00	-8.07	-8.74	-6.76	-5.47	-4.09	13.84	15.43	17.13	18.95	20.91	23.02	25.29	27.74	30.37	33.21	18.14
Tax credit	0.00	0.00	0.00	17.41	0.00	0.00	0.00	0.00	0.00	0.00	0.00	0.00	0.00	0.00	0.00	0.00	0.00	0.00	0.00
Tax actually paid	0.00	0.00	0.00	-25.48	-8.74	-6.76	-5.47	-4.09	13.84	15.43	17.13	18.95	20.91	23.02	25.29	27.74	30.37	33.21	18.14
Construction cash flow	0.00	-44.55	-47.30	-25.05	0.00	0.00	0.00	0.00	0.00	0.00	0.00	0.00	0.00	0.00	0.00	0.00	0.00	0.00	0.00
Operations cash flow	0.00	0.00	0.00	23.29	23.86	24.55	26.12	27.81	13.16	15.09	17.17	19.40	21.80	24.38	27.15	30.14	33.36	36.83	51.15
OVERALL CASH FLOW (Built JV) IRR 18.04%	0.00	-44.55	-47.30	-1.76	23.86	24.55	26.12	27.81	13.16	15.09	17.17	19.40	21.80	24.38	27.15	30.14	33.36	36.83	51.15

General Estimating Procedure

Basic Capital Cost Estimate

Working with equipment lists, plot plans and specifications, the Badger Estimating Department concluded a factor estimate for a 25 million gallon per year wood chips to ethanol plant. Separate estimates of direct costs were made for each defined area of the plant. The total project summary sheet combines all the direct costs by area, as well as the total direct costs, i.e., engineering and field indirect accounts. A typical worksheet is given in Appendix VII.

The basic factor estimate was accomplished in the following steps:

- Equipment material costs were developed for each piece of equipment using vendor quotation or in-house Badger data. Quotations were obtained for very expensive items and item unique to this type of plant, (example: grinders and chip cleaners).

- Each piece of equipment has been multiplied by an installation factor to arrive at a total direct installed cost of a U.S. Gulf Coast (USGC) basis. Installation factors were applied to the equipment costs to account for the costs of piping and valving, instrumentation and controls, structural steel, electrical, all civil work including foundations, insulation, painting and the like. These factors are determined by utilizing historical Badger data for similar projects.

- By utilizing historical project cost data, the total direct cost has been broken down into material cost, labor cost and labor manhours. Historical data has also been used to break down the total field manhours into direct hire and subcontract manhours.

- Field indirect costs have been established from historical Badger data and based on direct manhours.

- Engineering costs have been based mainly on number of equipment pieces and modified by equipment size, cost, repetition and the like.

Reduced Capacity Plant

An estimate has been made for a reduced capacity plant - 5 million gallon per year. Using equipment lists prepared for this capacity, estimating procedures followed were the same as those used for the base estimate - 25 million gallon per year. In many cases equipment costs were exponentially scaled from the base estimate, rather than based on a separate vendor quote.

Other Costs

In addition to the base estimate cost, allowances were made for the following items: (see Appendix V)

- Departmental Overhead
- General and Administrative Overhead
- Land (Included Separately in Economic Analysis)
- Taxes
- Spare Parts
- Startup Allowance
- Fee
- Plant Transfer from U.S. Gulf Coast to Mid-west
- Contingency (To Arrive at "Most Likely" Estimate Figure)

SERI: 25 Million Gallon Per Year Base Case
Major Items with Basis for Capital Cost

Area	Item Number	Description	Method of Estimating
100	GM-104 A/B/S	Front End Loader	Quote by Caterpillar
	GS-105	Magnetic Clip Cleaner	Quote by Dings Magnetic
	GM-106 A/B	Switch Engines	Quote by Plymouth Locomotive
200	MS-201	Slurry Vessel	Quote by Jayco/Vrieco
	MR-202	Hydrolysis Reactor	Quote by Teledyne/Chung Wah
	MS-203	High Pressure Flash Drum	Office Estimate
	MB-216	Chip Feed Bin	Office Estimate
	PD-201 A/B/S	Hydrolysis Feed Pump	Quote by Worthington
	GG-202 A/B/C	Grinder	Quote by Bauer
	GA-204 A/B	High Pressure Feeder	Quote by Ingersoll Rand
	GC-209	Primary Lignin Centrifuge	Quote by Dorr Oliver
	GC-214	Lignin Centrifuge	Quote by Dorr Oliver
	GC-215	Primary Gypsum Hydroclone	Quote by Bauer
	GF-220	Gypsum Filter	Quote by Bird Centrifuge
	GS-231	Wood Grinds Beet Feeder	Quote ty K-Tron
	GA-224	Lime Mix Tank Agitator	Quote by Lightnin
300	AS-301	Scrubber	Office Estimate
	MR-301 A/B	Fermenter	Office Estimate
	PB-309 A/S	Recycle Blower	Quote by Roots-Dresser
	GZ-312	Yeast Immobilizing Unit	Quote by JGC
400	AS-401	Beer Column	Office Estimate
	AS-402	Rectification Column	Office Estimate
	PC-402	Sugar Stripper Vapor Compressor	Office Estimate
	TT-403 A/B	Beer Column Reboilers	Office Estimate
	TT-413	Feed Preheater	Office Estimate
	GZ-401	Molecular Sieve	Quote by Kemp
500	AS-501	Azeo Column	Office Estimate
	MS-502	Solvent Decanter	Office Estimate
	TY-501	Azeo Column Preheater	Office Estimate

SERI: 25 Million Gallon Per Year Base Case
Major Items with Basis for Capital Cost

Area	Item Number	Description	Method of Estimating
600		Buildings	Office Estimate
		Railroad Spur	Office Estimate
		Roads	Office Estimate
		Fire Loop	Office Estimate
		Tank Dikes	Office Estimate
	MT-607	Fire Water Tank	Office Estimate
700	MT-707	Biotreater	Office Estimate
	PE-704	Evaporation Vacuum System	Office Estimate
	PB-712 A/S	Aeration Blowers	Office Estimate
	GV-708	Secondary Clarifier	Office Estimate
800	HB-801 A/B	Boiler	Quote from Zurn
	GZ-811	Turbogenerator	Quote From Turbodyne
	GT-812	Cooling Tower	Quote from Marley
	HC-803	Biofuel System	Quote from Flakt
	PP-808 A/S	High Pressure Boiler Feed Water Pump	Office Estimate
	PP-812 A-H	Cooling Tower Pumps	Office Estimate
	GV-806	Deaerator	Office Estimate

BADGER

ESTIMATE SUMMARY SHEET

CASE I

GRAND SUMMARY

CLIENT SERI

EST. NO. E-0461

LOCATION US GULF COAST 2Q84

PLANT 1.0 MM GAL/YR WOOD TO ETHANOL

ISSUE	DATE	BY	CHKD
I	6/26/84	MWB	

ACCT.	DESCRIPTION	# PCS.	MANHOURS S/C	MANHOURS DIRECT	MATERIAL $	LABOR $	TOTAL $
A	TOWERS	5			56,000		
M	DRUMS, TANKS & REACT.	36			531,300		
P	PUMPS, COMPR., ETC.	63			216,700		
T	HEAT EXCHANGERS	33			305,200		
G	SPECIAL EQUIPMENT	48			503,500		
H	HEATERS & STACKS						
	TOTAL EQUIPMENT (A-H)	185			1,612,700		
C	PIPING						
D	STRUCTURES						
E	ELECTRICAL						
K	INSTRUMENTATION						
F	FIREPROTECTION						
B	BUILDINGS						
J	FOUNDATIONS & EARTHWORK						
Q	SEWERS						
S	SITE DEVELOPMENT						
N	INSULATION						
R	PAINTING						
	TOTAL (C-R) ACCOUNTS						
	TOTAL (A-T) ACCOUNTS		74,300		3,045,000	1,633,000	4,678,000
	PORTABLE EQUIP/WRHSE SPARES						190,000
V	INSURANCE & TAXES						
W	OVERSEAS SHIPPING						
	TOTAL V & W ACCOUNTS						
X	TEMPORARY CONSTRUCTION						
Y	FIELD OFFICE						
Z	EQUIP., TOOLS & SUPPLIES						
	TOTAL X, Y, & Z ACCOUNTS						945,000
U	HOME OFFICE INCL G & A, OVHD			75,000			3,597,000
	GRAND TOTAL						9,310,000

For exclusions, see overall summary listing. Excl. G&A, OVHD 8,000,000

ESTIMATE SUMMARY SHEET INDEX

PAGE NO.	ESTIMATE
1 - 8	Case I, 1.0 MM GPY
9 - 19	Case II, 1.0 MM GPY Alternate
20 - 28	Base Commercial Unit, 5.0 MM GPY
29 - 30	Alternate Commercial Unit, 5.0 MM GPY
31 - 39	Base Commercial Unit, 25.0 MM GPY
40 - 42	Alternate Commercial Unit, 25.0 MM GPY

SOLAR ENERGY RESEARCH INSTITUTE
PLANT DEFINITION STUDY
WOOD TO ETHANOL: 1.0, 5.0 & 25.0 MM GAL/YR.
COMPILATION OF APPROXIMATE TOTAL COST TO CLIENT

JOB NO.: E-0461
DATE: AUG. 20, 1984

CATEGORY OF COST	CASE I 1.0 MM GPY $MM	CASE II 1.0 MM GPY $MM	BASE 5.0 MM GPY $MM	ALTERNATIVE 5.0 MM GPY $MM	BASE 25.0 MM GPY $MM	ALTERNATIVE 25.0 MM GPY $MM
1. Battery Limit Factor Estimate	8.00	19.83	49.00	40.20	103.40	99.30
2. Overhead @ 50% & G.A. @ 15%	1.31	2.35	4.06	4.02	5.82	5.94
3. Catalyst & Chemicals-incl. w/Item #15						
4. Land allowance, 5 acres	0.10	0.10	0.10	0.10	0.10	0.10
5. Taxes, allow 1½% of Plant Cost	0.17	0.41	0.84	0.66	1.77	1.70
6. Spare Parts 4% [A-H + 2/3(C-R)]	0.10	0.30	0.82	0.65	2.10	1.94
7. Escalation: Basis 10/85 start	1.15	2.80	7.21	5.59	14.57	14.00
8. Royalty w/IGC Fermentation	0.07	0.07	0.25	0.25	0.25	0.25
9. Start-up Allowance	0.35	0.50	0.70	0.70	1.00	1.00
10. Fee	Excl	Excl	Excl	Excl	Excl	Excl
11. Transfer Plant: USGC to Midwest +15%	1.70	3.75	8.43	6.60	17.69	17.00
12. Contingency, nominal +10% + first-of-a-kind +5%	1.50	3.50	8.43	6.60	17.69	17.00
13. Client Costs: 5 men for 1.5 Years	0.70	0.70	0.70	0.70	0.70	0.70
TOTAL	15.15	34.31	80.54	66.07	165.09	158.93
14. Cost Sharing 20.3% (Engr. + Mark-up)	0.71	1.27	2.19	2.17	3.14	3.21
15. Plant Costs/Year - See Financial Section - Operating Costs/Year - Revenue/Year						
16. Finance Costs (30% equity) 15% interest - Thru Start-up, Total - After Start-up, first year	3.50 1.60	9.50 3.60	24.80 8.45	20.34 6.94	50.84 17.33	48.95 16.70

NOTES:
1. Category #1, Battery Limit Plant, is a factor estimate - a Badger Class IV Estimate with a probable accuracy of ±25%. Based on USGC 2Q84 costs, this estimate excludes all overhead, fee and contingency.
2. Categories #2 through #13 are strictly allowances and may vary considerably based on conditions at time of implementation.
3. Categories #14 through #16 are cost indicators only and are to be used primarily as check-off items for inclusion in overall economics.

BADGER

ESTIMATE SUMMARY SHEET

CASE I

300 AREA

CLIENT SERI

EST. NO. E-0461

LOCATION USGC, 2084

ISSUE	DATE	BY	CHKD.
I	6/26/84	MWB	
		MWB	

PLANT FERMENTATION UNIT

ACCT.	DESCRIPTION	# PCS.	MANHOURS S/C	MANHOURS DIRECT	MATERIAL $	LABOR $	TOTAL $
A	TOWERS	1			4,000		
M	DRUMS, TANKS & REACT.	8			96,000		
P	PUMPS, COMPR., ETC.	13			28,000		
T	HEAT EXCHANGERS	3			17,000		
G	SPECIAL EQUIPMENT	10			16,000		
H	HEATERS & STACKS	-			-		
	TOTAL EQUIPMENT (A-H)	35			161,000		
C	PIPING						
D	STRUCTURES						
E	ELECTRICAL						
K	INSTRUMENTATION						
F	FIREPROTECTION						
B	BUILDINGS						
J	FOUNDATIONS & EARTHWORK						
Q	SEWERS						
S	SITE DEVELOPMENT						
N	INSULATION						
R	PAINTING						
	TOTAL (C-R) ACCOUNTS						
	TOTAL (A-T) ACCOUNTS						545,000
V	INSURANCE & TAXES						
W	OVERSEAS SHIPPING						
	TOTAL V & W ACCOUNTS						
X	TEMPORARY CONSTRUCTION						
Y	FIELD OFFICE						
Z	EQUIP., TOOLS & SUPPLIES						
	TOTAL X, Y, & Z ACCOUNTS						
U	HOME OFFICE						
	GRAND TOTAL						

BADGER

ESTIMATE SUMMARY SHEET

CASE I

400 AREA

CLIENT SERI

EST. NO. E-0461

LOCATION USGC, 2Q84

PLANT ETHANOL UNIT

ISSUE	DATE	BY	CHKD.
I	6/26/84	MWB	
		MWB	

ACCT.	DESCRIPTION	# PCS.	MANHOURS S/C	MANHOURS DIRECT	MATERIAL $	LABOR $	TOTAL $
A	TOWERS	1			11,000		
M	DRUMS, TANKS & REACT.	3			24,000		
P	PUMPS, COMPR., ETC.	3			7,000		
T	HEAT EXCHANGERS	6			52,000		
G	SPECIAL EQUIPMENT	-			-		
H	HEATERS & STACKS	-			-		
	TOTAL EQUIPMENT (A-H)	13			94,000		
C	PIPING						
D	STRUCTURES						
E	ELECTRICAL						
K	INSTRUMENTATION						
F	FIREPROTECTION						
B	BUILDINGS						
J	FOUNDATIONS & EARTHWORK						
Q	SEWERS						
S	SITE DEVELOPMENT						
N	INSULATION						
R	PAINTING						
	TOTAL (C-R) ACCOUNTS						
	TOTAL (A-T) ACCOUNTS						290,000
V	INSURANCE & TAXES						
W	OVERSEAS SHIPPING						
	TOTAL V & W ACCOUNTS						
X	TEMPORARY CONSTRUCTION						
Y	FIELD OFFICE						
Z	EQUIP., TOOLS & SUPPLIES						
	TOTAL X, Y, & Z ACCOUNTS						
U	HOME OFFICE						
	GRAND TOTAL						

BADGER

PRELIMINARY ESTIMATING
TRANSMITTAL FORM
CAPITAL COST ESTIMATE

FILE NO./JOB NO.: E-0461
8/20/84 ISSUE II
TRANSMITTAL DATE: 7/2/84 ISSUE I

REQUESTED BY DEPT: PROJECT
NAME: H.S. KLEIN

DATE REQUESTED: 6/11/84

CLIENT : SERI
PLANT TYPE : WOOD TO ALCOHOL DEMONSTRATION UNIT
CAPACITY : 1.0, 5.0 & 25.0 MM GPY OF ALCOHOL
SITE LOCATION : USGC

PERSONNEL SALES: E.J. Whitehead
PROCESS: S.W. Fitzpatrick
PROJECT: H.S. Klein
ESTIMATE MADE BY: M.W. Brinker
APPROVED BY: II EMH I II

ESTIMATE FOR:	MMS	ACCURACY
See Attachments		± %
		± %
		± %
		± %
TOTAL (A-Z)M+L + OVHD @ 0 %		± %

CC T BASIS

INSTANTANEOUS COSTS AS PER 2 QRT. 1984
PRODUCTIVITY 90 %
___ JOB SITE
X USGC/HOUSTON
___ _____

EXCLUSIONS FROM CAPITAL COST

OVERHEAD, G & A
FUTURE ESCALATION
TAXES
SPARE PARTS
CATALYST & CHEMICALS
START-UP
CONTINGENCY
ROYALTY
FEE

ESTIMATING APPROACH:

___ CAPACITY VS. CAPITAL COST CURVE BY PROCESS UNIT
___ EXPONENTIAL CAPACITY/COST ADJUSTMENT OF PREVIOUS PROJECT
___ ESCALATE PREVIOUS PROJECT COSTS ON AN OVERALL BASIS
X FACTOR ESTIMATE, BASED ON OFFICE ESTIMATED EQUIPMENT
___ FACTOR ESTIMATE, WITH QUOTES FOR MAJOR EQUIPMENT ITEMS
X OTHER: ALLOWANCES FOR BELOW-THE-LINE CLIENT ITEMS

SCOPE:

X ONSITES
___ UTILITIES
___ TANKAGE
___ WASTE TREATMENT
X OTHER SUCH AS:
ALL OTHER CLIENT COSTS (BELOW-THE-LINE)

COMMENTS:

ISSUE I — Capital cost estimates for this 1.0 MM demonstration unit have been made for Case I a minimum core/cost unit and Case II, a maximized scope/cost unit w/utilities (and, hence, having a low operating cost). These 2 cases represent an optimistic (Case I) versus a pessimistic (Case II) approach.

ISSUE II — Capital Cost estimates have been made for 2 commercial units - 5.0 & 25.0 MM GPY of alcohol. Additionally, an alternate for each capacity has been estimated. Below-the-line costs for each capacity, as well as that of Issue I, are shown on an attached table.

PURPOSE: Preliminary EAD for initiation of U.S. Government's appropriation study.

DISTRIBUTION (Excluding Summary Sheets)

RD/DSM
FPF
EMH
JWK
SALES/PROCESS/PROJECT AS INDICATED ABOVE

SOLAR ENERGY R 'ARCH INSTITUTE
COMMERCIAL PLAN. DEFINITION STUDY
WOOD TO ETHANOL: 1.0, 5.0 & 25.0 MM GAL/YR.
BATTERY LIMIT FACTOR ESTIMATE

JOB NO.: 0461
DATE: AUG. 20, 1984

	CASE I 1.0 MM GPY	CASE II 1.0 MM GPY	BASE 5.0 MM GPY	ALTERNATE 5.0 MM GPY	BASE 25.0 MM GPY	ALTERNATE 25.0 MM GPY
• Estimated Plant Cost, USGC 2Q84, A-Z Total Plant excluding: . Overhead . G & A . Future Escalation . Taxes . Spare Parts . Catalyst & Chemicals . Start-up . Contingency . Royalty . Fee	$ 8.0 MM	$ 19.83 MM	$ 49.0 MM	$ 40.2 MM	$ 103.4 MM	$ 99.3 MM
• Ethylalcohol produced MM GPY	1.0	1.0	5.0	5.0	25.0	25.0
• By-product furfural produced MM LBS/YR	5.2	5.2	26.0	26.0	130.3	85.0
• Export electricity produced KWH/YR	None	7.0	35.2	None	176.0	None
• Wood processed - dry basis- Metric Tons/Day	72	72	354	354	1,771	1,584

SCOPE:

- Case I - Demonstration Unit, 1.0 MM GPY of ethanol, minimum scope/cost (from Issue 1). Core ISBL w/no electricity.
- Case II - Demonstration Unit, 1.0 MM GPY of ethanol, maximized scope/cost (from Issue 1). Export electricity produced.
- Base Commercial Unit, 5.0 MM GPY of ethanol, with export electricity produced.
- Alternate Commercial Unit, 5.0 MM GPY of ethanol, with no electricity produced.
- Base Commercial Unit, 25.0 MM GPY of ethanol, with export electricity produced.
- Alternate Commerical Unit, 25.0 MM GPY of ethanol, including second step hydrolysis reactor and no export electricity.

BADGER

ESTIMATE SUMMARY SHEET

CASE I

100 AREA

CLIENT SERI

EST. NO. E-0461

LOCATION USGC, 2084

PLANT FEED UNIT

ISSUE	DATE	BY	CHKD.
I	6/26/84	MWB	
		MWB	

ACCT.	DESCRIPTION	# PCS.	MANHOURS S/C	MANHOURS DIRECT	MATERIAL $	LABOR $	TOTAL $
A	TOWERS						
M	DRUMS, TANKS & REACT.						
P	PUMPS, COMPR., ETC.						
T	HEAT EXCHANGERS						
G	SPECIAL EQUIPMENT	4			38,000		
H	HEATERS & STACKS						
	TOTAL EQUIPMENT (A-H)	4			38,000		
C	PIPING						
D	STRUCTURES						
E	ELECTRICAL						
K	INSTRUMENTATION						
F	FIREPROTECTION						
B	BUILDINGS						
J	FOUNDATIONS & EARTHWORK						
Q	SEWERS						
S	SITE DEVELOPMENT						
N	INSULATION						
R	PAINTING						
	TOTAL (C-R) ACCOUNTS						
	TOTAL (A-T) ACCOUNTS						88,000
V	INSURANCE & TAXES						
W	OVERSEAS SHIPPING						
	TOTAL V & W ACCOUNTS						
X	TEMPORARY CONSTRUCTION						
Y	FIELD OFFICE						
Z	EQUIP., TOOLS & SUPPLIES						
	TOTAL X, Y, & Z ACCOUNTS						
U	HOME OFFICE						
	GRAND TOTAL						

+ Portable Equipment 100,000

BADGER

ESTIMATE SUMMARY SHEET

CASE I

200 AREA

CLIENT SERI

EST. NO. E-0461

LOCATION USGC, 2084

ISSUE	DATE	BY	CHKD.
I	6/26/84	MWB	
		DWM	

PLANT ACID HYDROLYSIS UNIT

ACCT.	DESCRIPTION	# PCS.	MANHOURS S/C	MANHOURS DIRECT	MATERIAL $	LABOR $	TOTAL $
A	TOWERS	1			17,000		
M	DRUMS, TANKS & REACT.	17			283,000		
P	PUMPS, COMPR., ETC.	35			161,000		
T	HEAT EXCHANGERS	13			159,000		
G	SPECIAL EQUIPMENT	32			300,000		
H	HEATERS & STACKS	-			-		
	TOTAL EQUIPMENT (A-H)	98			920,000		
C	PIPING						
D	STRUCTURES						
E	ELECTRICAL						
K	INSTRUMENTATION						
F	FIREPROTECTION						
B	BUILDINGS						
J	FOUNDATIONS & EARTHWORK						
Q	SEWERS						
S	SITE DEVELOPMENT						
N	INSULATION						
R	PAINTING						
	TOTAL (C-R) ACCOUNTS						
	TOTAL (A-T) ACCOUNTS						2,575,000
V	INSURANCE & TAXES						
W	OVERSEAS SHIPPING						
	TOTAL V & W ACCOUNTS						
X	TEMPORARY CONSTRUCTION						
Y	FIELD OFFICE						
Z	EQUIP., TOOLS & SUPPLIES						
	TOTAL X, Y, & Z ACCOUNTS						
U	HOME OFFICE						
	GRAND TOTAL						

BADGER

ESTIMATE SUMMARY SHEET

CASE I

500 AREA

CLIENT SERI

EST. NO. E-0461

LOCATION USGC, 2084

PLANT FURFURAL UNIT

ISSUE	DATE	BY	CHKD.
I	6/26/84	MWB	
		MWB	

ACCT.	DESCRIPTION	# PCS.	MANHOURS S/C	MANHOURS DIRECT	MATERIAL $	LABOR $	TOTAL $
A	TOWERS	2			24,000		
M	DRUMS, TANKS & REACT.	2			17,000		
P	PUMPS, COMPR., ETC.	6			8,000		
T	HEAT EXCHANGERS	8			48,000		
G	SPECIAL EQUIPMENT	-			-		
H	HEATERS & STACKS	-			-		
	TOTAL EQUIPMENT (A-H)	18			97,000		
C	PIPING						
D	STRUCTURES						
E	ELECTRICAL						
K	INSTRUMENTATION						
F	FIREPROTECTION						
B	BUILDINGS						
J	FOUNDATIONS & EARTHWORK						
Q	SEWERS						
S	SITE DEVELOPMENT						
N	INSULATION						
R	PAINTING						
	TOTAL (C-R) ACCOUNTS						
	TOTAL (A-T) ACCOUNTS						270,000
V	INSURANCE & TAXES						
W	OVERSEAS SHIPPING			-			
	TOTAL V & W ACCOUNTS						
X	TEMPORARY CONSTRUCTION						
Y	FIELD OFFICE						
Z	EQUIP., TOOLS & SUPPLIES						
	TOTAL X, Y, & Z ACCOUNTS						
U	HOME OFFICE						
	GRAND TOTAL						

BADGER

ESTIMATE SUMMARY SHEET

CASE I

600 AREA

CLIENT SERI

EST. NO. E-0461

LOCATION USGC, 2Q84

PLANT TANKAGE BUILDING

ISSUE	DATE	BY	CHK'D
I	6/26/84	MWB	
		Mwb	

ACCT.	DESCRIPTION	# PCS.	MANHOURS S/C	MANHOURS DIRECT	MATERIAL $	LABOR $	TOTAL $
A	TOWERS						
M	DRUMS, TANKS & REACT.	4			70,000		
P	PUMPS, COMPR., ETC.	4			10,500		
T	HEAT EXCHANGERS	1			8,000		
G	SPECIAL EQUIPMENT	1			500		
H	HEATERS & STACKS	-			-		
	TOTAL EQUIPMENT (A-H)	10			89,000		
C	PIPING						
D	STRUCTURES						
E	ELECTRICAL						
K	INSTRUMENTATION						
F	FIREPROTECTION						
B	BUILDINGS						
J	FOUNDATIONS & EARTHWORK						
Q	SEWERS						
S	SITE DEVELOPMENT						
N	INSULATION						
R	PAINTING						
	TOTAL ACCOUNTS						300,000
	ALLOW FOR BUILDING						60,000
	TOTAL (A-T) ACCOUNTS						360,000
V	INSURANCE & TAXES						
W	OVERSEAS SHIPPING						
	TOTAL V & W ACCOUNTS						
X	TEMPORARY CONSTRUCTION						
Y	FIELD OFFICE						
Z	EQUIP., TOOLS & SUPPLIES						
	TOTAL X, Y, & Z ACCOUNTS						
U	HOME OFFICE						
	GRAND TOTAL						

BADGER

ESTIMATE SUMMARY SHEET

CASE I

700 AREA

CLIENT SERI

LOCATION USGC, 2Q84

PLANT ENVIRONMENTAL UNIT

EST. NO. E-0461

ISSUE	DATE	BY	CHKD.
I	6/26/84	MWB	
		MWB	

ACCT.	DESCRIPTION	# PCS.	MANHOURS S/C	MANHOURS DIRECT	MATERIAL $	LABOR $	TOTAL $
A	TOWERS						
M	DRUMS, TANKS & REACT.	2			41,300		
P	PUMPS, COMPR., ETC.	2			2,200		
T	HEAT EXCHANGERS	2			21,200		
G	SPECIAL EQUIPMENT	1			149,000		
H	HEATERS & STACKS	-			-		
	TOTAL EQUIPMENT (A-H)	7			213,700		
C	PIPING						
D	STRUCTURES						
E	ELECTRICAL						
K	INSTRUMENTATION						
F	FIREPROTECTION						
B	BUILDINGS						
J	FOUNDATIONS & EARTHWORK						
Q	SEWERS						
S	SITE DEVELOPMENT						
N	INSULATION						
R	PAINTING						
	TOTAL (C-R) ACCOUNTS						
	TOTAL (A-T) ACCOUNTS						550,000
V	INSURANCE & TAXES						
W	OVERSEAS SHIPPING						
	TOTAL V & W ACCOUNTS						
X	TEMPORARY CONSTRUCTION						
Y	FIELD OFFICE						
Z	EQUIP., TOOLS & SUPPLIES						
	TOTAL X, Y, & Z ACCOUNTS						
U	HOME OFFICE						
	GRAND TOTAL						

BADGER

ESTIMATE SUMMARY SHEET

CASE II

GRAND SUMMARY

GRASS ROOT PLANT

CLIENT SERI

EST. NO. E-0461

LOCATION USGC, 2Q84

PLANT 1.0 MM GAL/YR WOOD TO ETHANOL

ISSUE	DATE	BY	CHKD
I	6/26/84	MWB	
		MWB	

ACCT.	DESCRIPTION	# PCS	MANHOURS S/C	MANHOURS DIRECT	MATERIAL $	LABOR $	TOTAL $
A	TOWERS	6			66,500		
M	DRUMS, TANKS & REACT.	60			856,200		
P	PUMPS, COMPR., ETC.	98			513,500		
T	HEAT EXCHANGERS	38			316,000		
G	SPECIAL EQUIPMENT	73			2,857,000		
H	HEATERS & STACKS	1			40,000		
	TOTAL EQUIPMENT (A-H)	276			4,649,200		
C	PIPING						
D	STRUCTURES						
E	ELECTRICAL						
K	INSTRUMENTATION						
F	FIREPROTECTION						
B	BUILDINGS						
J	FOUNDATIONS & EARTHWORK						
Q	SEWERS						
S	SITE DEVELOPMENT						
N	INSULATION						
R	PAINTING						
	TOTAL (C-R) ACCOUNTS						
	TOTAL (A-T) ACCOUNTS		220,600		8,604,000	4,596,000	13,200,000
	PORT. EQ./WHS SPRS/LAB EQ.						290,000
V	INSURANCE & TAXES						
W	OVERSEAS SHIPPING						
	TOTAL V & W ACCOUNTS						
X	TEMPORARY CONSTRUCTION						
Y	FIELD OFFICE						
Z	EQUIP., TOOLS & SUPPLIES						
	TOTAL X, Y, & Z ACCOUNTS						2,300,000
	HOME OFFICE INCL G&A, OVHD			133,000			6,390,000
	GRAND TOTAL						22,180,000

For exclusions, see overall summary listing. Excl. G&A, OVHD 19,830,000

BADGER

ESTIMATE SUMMARY SHEET

CASE II

100 AREA

CLIENT SERI

EST. NO. E-0461

LOCATION USGC, 2Q84

ISSUE	DATE	BY	CHKD.
I	6/26/84	MWB	

PLANT FEED UNIT

ACCT.	DESCRIPTION	# PCS.	MANHOURS S/C	MANHOURS DIRECT	MATERIAL $	LABOR $	TOTAL $
A	TOWERS						
M	DRUMS, TANKS & REACT.						
P	PUMPS, COMPR., ETC.						
T	HEAT EXCHANGERS						
G	SPECIAL EQUIPMENT	5			46,000		
H	HEATERS & STACKS						
	TOTAL EQUIPMENT (A-H)	5			46,000		
C	PIPING						
D	STRUCTURES						
E	ELECTRICAL						
K	INSTRUMENTATION						
F	FIREPROTECTION						
B	BUILDINGS						
J	FOUNDATIONS & EARTHWORK						
Q	SEWERS						
S	SITE DEVELOPMENT						
N	INSULATION						
R	PAINTING						
	TOTAL (C-R) ACCOUNTS						
	TOTAL (A-T) ACCOUNTS						100,000
V	INSURANCE & TAXES						
W	OVERSEAS SHIPPING						
	TOTAL V & W ACCOUNTS						
X	TEMPORARY CONSTRUCTION						
Y	FIELD OFFICE						
Z	EQUIP., TOOLS & SUPPLIES						
	TOTAL X, Y, & Z ACCOUNTS						
U	HOME OFFICE						
	GRAND TOTAL						

+ Portable Equipment 100,000

BADGER

ESTIMATE SUMMARY SHEET

CASE II

200 AREA

CLIENT SERI

EST. NO. E-0461

LOCATION USGC, 2Q84

PLANT ACID HYDROLYSIS UNIT

ISSUE	DATE	BY	CHKD.
I	6/26/84	MWB	

ACCT.	DESCRIPTION	# PCS.	MANHOURS S/C	MANHOURS DIRECT	MATERIAL $	LABOR $	TOTAL $
A	TOWERS	1			17,000		
M	DRUMS, TANKS & REACT.	17			283,000		
P	PUMPS, COMPR., ETC.	35			161,000		
T	HEAT EXCHANGERS	13			159,000		
G	SPECIAL EQUIPMENT	32			300,000		
H	HEATERS & STACKS	-			-		
	TOTAL EQUIPMENT (A-H)	98			920,000		
C	PIPING						
D	STRUCTURES						
E	ELECTRICAL						
K	INSTRUMENTATION						
F	FIREPROTECTION						
B	BUILDINGS						
J	FOUNDATIONS & EARTHWORK						
O	SEWERS						
S	SITE DEVELOPMENT						
N	INSULATION						
R	PAINTING						
	TOTAL (C-R) ACCOUNTS						
	TOTAL (A-T) ACCOUNTS						2,575,000
V	INSURANCE & TAXES						
W	OVERSEAS SHIPPING						
	TOTAL V & W ACCOUNTS						
X	TEMPORARY CONSTRUCTION						
Y	FIELD OFFICE						
Z	EQUIP., TOOLS & SUPPLIES						
	TOTAL X, Y, & Z ACCOUNTS						
U	HOME OFFICE						
	GRAND TOTAL						

BADGER

ESTIMATE SUMMARY SHEET

CASE II

300 AREA

CLIENT SERI

LOCATION USGC, 2Q84

PLANT FERMENTATION UNIT

EST. NO. E-0461

ISSUE	DATE	BY	CHKD.
I	6/26/84	MWB	

ACCT.	DESCRIPTION	# PCS.	MANHOURS S/C	MANHOURS DIRECT	MATERIAL $	LABOR $	TOTAL $
A	TOWERS	1			4,000		
M	DRUMS, TANKS & REACT.	8			96,000		
P	PUMPS, COMPR., ETC.	13			28,000		
T	HEAT EXCHANGERS	3			17,000		
G	SPECIAL EQUIPMENT	11			26,000		
H	HEATERS & STACKS	-			-		
	TOTAL EQUIPMENT (A-H)	36			171,000		
C	PIPING						
D	STRUCTURES						
E	ELECTRICAL						
K	INSTRUMENTATION						
F	FIREPROTECTION						
B	BUILDINGS						
J	FOUNDATIONS & EARTHWORK						
Q	SEWERS						
S	SITE DEVELOPMENT						
N	INSULATION						
R	PAINTING						
	TOTAL (C-R) ACCOUNTS						
	TOTAL (A-T) ACCOUNTS						570,000
V	INSURANCE & TAXES						
W	OVERSEAS SHIPPING						
	TOTAL V & W ACCOUNTS						
X	TEMPORARY CONSTRUCTION						
Y	FIELD OFFICE						
Z	EQUIP., TOOLS & SUPPLIES						
	TOTAL X, Y, & Z ACCOUNTS						
U	HOME OFFICE						
	GRAND TOTAL						

Laboratory Equipment 100,000

BADGER

ESTIMATE SUMMARY SHEET

CASE II

400 AREA

CLIENT SERI

LOCATION USCG, 2084

PLANT ETHANOL UNIT

EST. NO. E-0461

ISSUE	DATE	BY	CHKD.
I	6/26/84	MWB	

ACCT.	DESCRIPTION	# PCS.	MANHOURS S/C	MANHOURS DIRECT	MATERIAL $	LABOR $	TOTAL $
A	TOWERS	2			21,500		
M	DRUMS, TANKS & REACT.	6			28,600		
P	PUMPS, COMPR., ETC.	8			15,500		
T	HEAT EXCHANGERS	10			63,000		
G	SPECIAL EQUIPMENT	1			500,000		
H	HEATERS & STACKS	-			-		
	TOTAL EQUIPMENT (A-H)	27			628,600		
C	PIPING						
D	STRUCTURES						
E	ELECTRICAL						
K	INSTRUMENTATION						
F	FIREPROTECTION						
B	BUILDINGS						
J	FOUNDATIONS & EARTHWORK						
Q	SEWERS						
S	SITE DEVELOPMENT						
N	INSULATION						
R	PAINTING						
	TOTAL (C-R) ACCOUNTS						
	TOTAL (A-T) ACCOUNTS						1,200,000
V	INSURANCE & TAXES						
W	OVERSEAS SHIPPING						
	TOTAL V & W ACCOUNTS						
X	TEMPORARY CONSTRUCTION						
Y	FIELD OFFICE						
Z	EQUIP., TOOLS & SUPPLIES						
	TOTAL X, Y, & Z ACCOUNTS						
U	HOME OFFICE						
	GRAND TOTAL						

BADGER

ESTIMATE SUMMARY SHEET

CASE II

500 AREA

CLIENT SERI

EST. NO. E-0461

LOCATION USGC, 2Q84

PLANT FURFURAL UNIT

ISSUE	DATE	BY	CHKD.
I	6/26/84	MWB	

ACCT.	DESCRIPTION	# PCS.	MANHOURS S/C	MANHOURS DIRECT	MATERIAL $	LABOR $	TOTAL $
A	TOWERS	2			24,000		
M	DRUMS, TANKS & REACT.	2			17,000		
P	PUMPS, COMPR., ETC.	6			8,000		
T	HEAT EXCHANGERS	8			48,000		
G	SPECIAL EQUIPMENT						
H	HEATERS & STACKS						
	TOTAL EQUIPMENT (A-H)	18			97,000		
C	PIPING						
D	STRUCTURES						
E	ELECTRICAL						
K	INSTRUMENTATION						
F	FIREPROTECTION						
B	BUILDINGS						
J	FOUNDATIONS & EARTHWORK						
Q	SEWERS						
S	SITE DEVELOPMENT						
N	INSULATION						
R	PAINTING						
	TOTAL (C-R) ACCOUNTS						
	TOTAL (A-T) ACCOUNTS						
							270,000
V	INSURANCE & TAXES						
W	OVERSEAS SHIPPING						
	TOTAL V & W ACCOUNTS						
X	TEMPORARY CONSTRUCTION						
Y	FIELD OFFICE						
Z	EQUIP., TOOLS & SUPPLIES						
	TOTAL X, Y, & Z ACCOUNTS						
U	HOME OFFICE						
	GRAND TOTAL						

BADGER

ESTIMATE SUMMARY SHEET

CASE II

600 AREA

CLIENT SERI

EST. NO. E-0461

LOCATION USGC, 2084

PLANT TANKAGE BUILDING

ISSUE	DATE	BY	CHKD.
I	6/26/84	MWB	

ACCT.	DESCRIPTION	# PCS.	MANHOURS S/C	MANHOURS DIRECT	MATERIAL $	LABOR $	TOTAL $
A	TOWERS						
M	DRUMS, TANKS & REACT.	11			177,600		
P	PUMPS, COMPR., ETC.	11			25,000		
T	HEAT EXCHANGERS	1			6,000		
G	SPECIAL EQUIPMENT	2			1,000		
H	HEATERS & STACKS	-			-		
	TOTAL EQUIPMENT (A-H)	25			209,600		
C	PIPING						
D	STRUCTURES						
E	ELECTRICAL						
K	INSTRUMENTATION						
F	FIREPROTECTION						
B	BUILDINGS						
J	FOUNDATIONS & EARTHWORK						
Q	SEWERS						
S	SITE DEVELOPMENT						
N	INSULATION						
R	PAINTING						
	TOTAL ACCOUNTS						800,000
	BUILDINGS/ROADS						830,000
	TOTAL (A-T) ACCOUNTS						1,630,000
V	INSURANCE & TAXES						
W	OVERSEAS SHIPPING						
	TOTAL V & W ACCOUNTS						
X	TEMPORARY CONSTRUCTION						
Y	FIELD OFFICE						
Z	EQUIP., TOOLS & SUPPLIES						
	TOTAL X, Y, & Z ACCOUNTS						
U	HOME OFFICE						
	GRAND TOTAL						

BADGER

ESTIMATE SUMMARY SHEET

CASE II

700 AREA

CLIENT SERI

EST. NO. E-0461

LOCATION USGC, 2084

PLANT ENVIRONMENTAL UNIT

ISSUE	DATE	BY	CHKD.
I	6/26/84	MWB	

ACCT.	DESCRIPTION	# PCS.	MANHOURS S/C	MANHOURS DIRECT	MATERIAL $	LABOR $	TOTAL $
A	TOWERS						
M	DRUMS, TANKS & REACT.	9			189,000		
P	PUMPS, COMPR., ETC.	13			53,000		
T	HEAT EXCHANGERS	3			23,000		
G	SPECIAL EQUIPMENT	9			271,000		
H	HEATERS & STACKS	-			-		
	TOTAL EQUIPMENT (A-H)	34			536,000		
C	PIPING						
D	STRUCTURES						
E	ELECTRICAL						
K	INSTRUMENTATION						
F	FIREPROTECTION						
B	BUILDINGS						
J	FOUNDATIONS & EARTHWORK						
Q	SEWERS						
S	SITE DEVELOPMENT						
N	INSULATION						
R	PAINTING						
	TOTAL (C-R) ACCOUNTS						
	TOTAL (A-T) ACCOUNTS						1,655,000
V	INSURANCE & TAXES						
W	OVERSEAS SHIPPING						
	TOTAL V & W ACCOUNTS						
X	TEMPORARY CONSTRUCTION						
Y	FIELD OFFICE						
Z	EQUIP., TOOLS & SUPPLIES						
	TOTAL X, Y, & Z ACCOUNTS						
U	HOME OFFICE						
	GRAND TOTAL						

BADGER

ESTIMATE SUMMARY SHEET

CASE II

800 AREA

CLIENT SERI

EST. NO. E-0461

LOCATION USGC, 2084

PLANT UTILITIES

ISSUE	DATE	BY	CHKD.
I	6/26/84	MWB	

ACCT.	DESCRIPTION	# PCS.	MANHOURS S/C	MANHOURS DIRECT	MATERIAL $	LABOR $	TOTAL $
A	TOWERS						
M	DRUMS, TANKS & REACT.	7			65,000		
P	PUMPS, COMPR., ETC.	12			223,000		
T	HEAT EXCHANGERS	-			-		
G	SPECIAL EQUIPMENT	10			318,000		
H	HEATERS & STACKS						
	TOTAL EQUIPMENT (A-H)	29			606,000		
C	PIPING						
D	STRUCTURES						
E	ELECTRICAL						
K	INSTRUMENTATION						
F	FIREPROTECTION						
B	BUILDINGS						
J	FOUNDATIONS & EARTHWORK						
Q	SEWERS						
S	SITE DEVELOPMENT						
N	INSULATION						
R	PAINTING						
	TOTAL (C-R) ACCOUNTS						
	TOTAL (A-T) ACCOUNTS						1,700,000
V	INSURANCE & TAXES						
W	OVERSEAS SHIPPING						
	TOTAL V & W ACCOUNTS						
X	TEMPORARY CONSTRUCTION						
Y	FIELD OFFICE						
Z	EQUIP., TOOLS & SUPPLIES						
	TOTAL X, Y, & Z ACCOUNTS						
U	HOME OFFICE						
	GRAND TOTAL						

BADGER

ESTIMATE SUMMARY SHEET

CASE II

800 AREA

CLIENT SERI

EST. NO. E-0461

LOCATION USGC, 2084

ISSUE	DATE	BY	CHKD.
I	6/26/84	MWB	

PLANT BOILERS, HB-801 A/B

ACCT.	DESCRIPTION	# PCS.	MANHOURS S/C	MANHOURS DIRECT	MATERIAL $	LABOR $	TOTAL $
A	TOWERS						
M	DRUMS, TANKS & REACT.						
P	PUMPS, COMPR., ETC.						
T	HEAT EXCHANGERS						
G	SPECIAL EQUIPMENT	2			1,070,000		
H	HEATERS & STACKS	1			40,000		
	TOTAL EQUIPMENT (A-H)	3			1,110,000		
C	PIPING						
D	STRUCTURES						
E	ELECTRICAL						
K	INSTRUMENTATION						
F	FIREPROTECTION						
B	BUILDINGS						
J	FOUNDATIONS & EARTHWORK						
Q	SEWERS						
S	SITE DEVELOPMENT						
N	INSULATION						
R	PAINTING						
	TOTAL (C-R) ACCOUNTS						
	TOTAL (A-T) ACCOUNTS						2,800,000
V	INSURANCE & TAXES						
W	OVERSEAS SHIPPING						
	TOTAL V & W ACCOUNTS						
X	TEMPORARY CONSTRUCTION						
Y	FIELD OFFICE						
Z	EQUIP., TOOLS & SUPPLIES						
	TOTAL X, Y, & Z ACCOUNTS						
U	HOME OFFICE						
	GRAND TOTAL						

BADGER

ESTIMATE SUMMARY SHEET

CASE II

800 AREA

CLIENT SERI

EST. NO. E-0461

LOCATION USGC, 2Q84

PLANT TURBOGENERATOR GZ-811

ISSUE	DATE	BY	CHKD.
I	6/26/84	MWB	

ACCT.	DESCRIPTION	# PCS.	MANHOURS S/C	MANHOURS DIRECT	MATERIAL $	LABOR $	TOTAL $
A	TOWERS						
M	DRUMS, TANKS & REACT.						
P	PUMPS, COMPR., ETC.						
T	HEAT EXCHANGERS						
G	SPECIAL EQUIPMENT	1			325,000		
H	HEATERS & STACKS						
	TOTAL EQUIPMENT (A-H)	1			325,000		
C	PIPING						
D	STRUCTURES						
E	ELECTRICAL						
K	INSTRUMENTATION						
F	FIREPROTECTION						
B	BUILDINGS						
J	FOUNDATIONS & EARTHWORK						
Q	SEWERS						
S	SITE DEVELOPMENT						
N	INSULATION						
R	PAINTING						
	TOTAL (C-R) ACCOUNTS						
	TOTAL (A-T) ACCOUNTS						700,000
V	INSURANCE & TAXES						
W	OVERSEAS SHIPPING						
	TOTAL V & W ACCOUNTS						
X	TEMPORARY CONSTRUCTION						
Y	FIELD OFFICE						
Z	EQUIP., TOOLS & SUPPLIES						
	TOTAL X, Y, & Z ACCOUNTS						
U	HOME OFFICE						
	GRAND TOTAL						

BADGER

ESTIMATE SUMMARY SHEET

TOTAL PLANT
GRAND SUMMARY
(AREAS 100 THRU 800)

CLIENT SERI

EST. NO. E-0461

LOCATION USGC, 2Q84

ISSUE	DATE	BY	CHKD.
I	8/15/84	MWB	
		MWB	

PLANT 5 MM GAL/YR OF ETHANOL

BASE CASE

ACCT.	DESCRIPTION	# PCS.	MANHOURS S/C	MANHOURS DIRECT	MATERIAL $	LABOR $	TOTAL $
A	TOWERS	6			272,000		
M	DRUMS, TANKS & REACT.	72			1,811,200		
P	PUMPS, COMPR., ETC.	176			1,580,900		
T	HEAT EXCHANGERS	42			1,637,300		
G	SPECIAL EQUIPMENT	83			6,652,600		
H	HEATERS & STACKS	2			2,900,000		
	TOTAL EQUIPMENT (A-H)	381			14,854,000		
C	PIPING						
D	STRUCTURES						
E	ELECTRICAL						
K	INSTRUMENTATION						
F	FIREPROTECTION						
B	BUILDINGS						
J	FOUNDATIONS & EARTHWORK						
Q	SEWERS						
S	SITE DEVELOPMENT						
N	INSULATION						
R	PAINTING						
	SUBTOTAL (A-T) ACCOUNTS				24,420,000	12,440,000	36,860,000
	PORTABLE EQ. & LAB EQUIP.				290,000	-	290,000
	TOTAL (A-T) ACCOUNTS		520,000		24,710,000	12,440,000	37,150,000
V	INSURANCE & TAXES						
W	OVERSEAS SHIPPING						
	TOTAL V & W ACCOUNTS						
X	TEMPORARY CONSTRUCTION						
Y	FIELD OFFICE						
Z	EQUIP., TOOLS & SUPPLIES						
	TOTAL X, Y, & Z ACCOUNTS						5,100,000
U	HOME OFFICE (EXCL. G & A + OVHD)			230,000			6,750,000
	GRAND TOTAL						49,000,000

For exclusions, see overall summary listing.

BADGER

ESTIMATE SUMMARY SHEET

AREA 100

CLIENT SERI

EST. NO. E-0461

LOCATION USGC, 2084

ISSUE	DATE	BY	CHKD.
I	8/15/84		
		Mart	

PLANT 5 MM GAL/YR OF ETHANOL

BASE CASE

FEED UNIT

ACCT.	DESCRIPTION	# PCS.	MANHOURS S/C	MANHOURS DIRECT	MATERIAL $	LABOR $	TOTAL $
A	TOWERS						
M	DRUMS, TANKS & REACT.						
P	PUMPS, COMPR., ETC.	1			3,000		
T	HEAT EXCHANGERS						
G	SPECIAL EQUIPMENT	7			93,000		
H	HEATERS & STACKS						
	TOTAL EQUIPMENT (A-H)	8			96,000		
C	PIPING						
D	STRUCTURES						
E	ELECTRICAL						
K	INSTRUMENTATION						
F	FIREPROTECTION						
B	BUILDINGS						
J	FOUNDATIONS & EARTHWORK						
Q	SEWERS						
S	SITE DEVELOPMENT						
N	INSULATION						
R	PAINTING						
	TOTAL (C-R) ACCOUNTS						
	TOTAL (A-T) ACCOUNTS						200,000
V	INSURANCE & TAXES						
W	OVERSEAS SHIPPING						
	TOTAL V & W ACCOUNTS						
X	TEMPORARY CONSTRUCTION						
Y	FIELD OFFICE						
Z	EQUIP., TOOLS & SUPPLIES						
	TOTAL X, Y, & Z ACCOUNTS						
U	HOME OFFICE						
	GRAND TOTAL						

Portable Equip. 190,000

BADGER

ESTIMATE SUMMARY SHEET

AREA 300

CLIENT SERI

LOCATION USGC, 2Q84

PLANT 5 MM GAL/YR OF ETHANOL FERMENTATION UNIT

BASE CASE

EST. NO. E-0461

ISSUE	DATE	BY	CHKD.
I	8/15/84	MWB	
		PMcW	

ACCT.	DESCRIPTION	# PCS.	MANHOURS S/C	MANHOURS DIRECT	MATERIAL $	LABOR $	TOTAL $
A	TOWERS	1			18,000		
M	DRUMS, TANKS & REACT.	10			240,000		
P	PUMPS, COMPR., ETC.	28			300,000		
T	HEAT EXCHANGERS	3			90,000		
G	SPECIAL EQUIPMENT	13			180,000		
H	HEATERS & STACKS	-			-		
	TOTAL EQUIPMENT (A-H)	55			828,000		
C	PIPING						
D	STRUCTURES						
E	ELECTRICAL						
K	INSTRUMENTATION						
F	FIREPROTECTION						
B	BUILDINGS						
J	FOUNDATIONS & EARTHWORK						
Q	SEWERS						
S	SITE DEVELOPMENT						
N	INSULATION						
R	PAINTING						
	TOTAL (C-R) ACCOUNTS						
	TOTAL (A-T) ACCOUNTS						2,110,000
V	INSURANCE & TAXES						
W	OVERSEAS SHIPPING						
	TOTAL V & W ACCOUNTS						
X	TEMPORARY CONSTRUCTION						
Y	FIELD OFFICE						
Z	EQUIP., TOOLS & SUPPLIES						
	TOTAL X, Y, & Z ACCOUNTS						
U	HOME OFFICE						
	GRAND TOTAL						

Laboratory Equip. 100,000

BADGER

ESTIMATE SUMMARY SHEET

AREA 400

CLIENT SERI

EST. NO. E-0461

LOCATION USGC, 2Q84

ISSUE	DATE	BY	CHKD.
I	8/15/84	MWB	
		MWB	

PLANT 5 MM GAL/YR OF ETHANOL

BASE CASE

ETHANOL UNIT

ACCT.	DESCRIPTION	# PCS.	MANHOURS S/C	MANHOURS DIRECT	MATERIAL $	LABOR $	TOTAL $
A	TOWERS	2			94,000		
M	DRUMS, TANKS & REACT.	6			44,000		
P	PUMPS, COMPR., ETC.	17			302,000		
T	HEAT EXCHANGERS	10			310,000		
G	SPECIAL EQUIPMENT	1			950,000		
H	HEATERS & STACKS	-			-		
	TOTAL EQUIPMENT (A-H)	36			1,700,000		
C	PIPING						
D	STRUCTURES						
E	ELECTRICAL						
K	INSTRUMENTATION						
F	FIREPROTECTION						
B	BUILDINGS						
J	FOUNDATIONS & EARTHWORK						
Q	SEWERS						
S	SITE DEVELOPMENT						
N	INSULATION						
R	PAINTING						
	TOTAL (C-R) ACCOUNTS						
	TOTAL (A-T) ACCOUNTS						3,100,000
V	INSURANCE & TAXES						
W	OVERSEAS SHIPPING						
	TOTAL V & W ACCOUNTS						
X	TEMPORARY CONSTRUCTION						
Y	FIELD OFFICE						
Z	EQUIP., TOOLS & SUPPLIES						
	TOTAL X, Y, & Z ACCOUNTS						
U	HOME OFFICE						
	GRAND TOTAL						

BADGER

ESTIMATE SUMMARY SHEET

AREA 500

CLIENT SERI

EST. NO. E-0461

LOCATION USGC, 2Q84

ISSUE	DATE	BY	CHKD.
I	8/15/84	MWB	
		MWB	

PLANT 5 MM GAL/YR OF ETHANOL FURFURAL

BASE CASE

ACCT.	DESCRIPTION	# PCS.	MANHOURS S/C	MANHOURS DIRECT	MATERIAL $	LABOR $	TOTAL $
A	TOWERS	2			95,000		
M	DRUMS, TANKS & REACT.	2			37,000		
P	PUMPS, COMPR., ETC.	12			13,000		
T	HEAT EXCHANGERS	8			215,000		
G	SPECIAL EQUIPMENT	-			-		
H	HEATERS & STACKS	-			-		
	TOTAL EQUIPMENT (A-H)	24			360,000		
C	PIPING						
D	STRUCTURES						
E	ELECTRICAL						
K	INSTRUMENTATION						
F	FIREPROTECTION						
B	BUILDINGS						
J	FOUNDATIONS & EARTHWORK						
Q	SEWERS						
S	SITE DEVELOPMENT						
N	INSULATION						
R	PAINTING						
	TOTAL (C-R) ACCOUNTS						
	TOTAL (A-T) ACCOUNTS						970,000
V	INSURANCE & TAXES						
W	OVERSEAS SHIPPING						
	TOTAL V & W ACCOUNTS						
X	TEMPORARY CONSTRUCTION						
Y	FIELD OFFICE						
Z	EQUIP., TOOLS & SUPPLIES						
	TOTAL X, Y, & Z ACCOUNTS						
U	HOME OFFICE						
	GRAND TOTAL						

BADGER

ESTIMATE SUMMARY SHEET

AREA 600

CLIENT SERI

EST. NO. E-0461

LOCATION USGC, 2Q84

ISSUE	DATE	BY	CHKD.
I	8/15/84	MWB	
		MWB	

PLANT 5 MM GAL/YR OF ETHANOL

BASE CASE

TANK STORAGE & BUILDINGS

ACCT.	DESCRIPTION	# PCS.	MANHOURS S/C	MANHOURS DIRECT	MATERIAL $	LABOR $	TOTAL $
A	TOWERS	-			-		
M	DRUMS, TANKS & REACT.	12			430,000		
P	PUMPS, COMPR., ETC.	22			29,000		
T	HEAT EXCHANGERS	1			19,000		
G	SPECIAL EQUIPMENT	2			2,000		
H	HEATERS & STACKS	-			-		
	TOTAL EQUIPMENT (A-H)	37			480,000		
C	PIPING						
D	STRUCTURES						
E	ELECTRICAL						
K	INSTRUMENTATION						
F	FIREPROTECTION						
B	BUILDINGS						
J	FOUNDATIONS & EARTHWORK						
Q	SEWERS						
S	SITE DEVELOPMENT						
N	INSULATION						
R	PAINTING						
	SUBTOTAL (A-T) ACCOUNTS						1,300,000
	BUILDINGS & ROADS						1,600,000
	TOTAL (A-T) ACCOUNTS						2,900,000
V	INSURANCE & TAXES						
W	OVERSEAS SHIPPING						
	TOTAL V & W ACCOUNTS						
X	TEMPORARY CONSTRUCTION						
Y	FIELD OFFICE						
Z	EQUIP., TOOLS & SUPPLIES						
	TOTAL X, Y, & Z ACCOUNTS						
U	HOME OFFICE						
	GRAND TOTAL						

BADGER

ESTIMATE SUMMARY SHEET

AREA 700

CLIENT SERI

EST. NO. E-0461

LOCATION USGC, 2Q84

ISSUE	DATE	BY	CHKD.
I	8/15/84	MWB	
		DWG/S	

PLANT 5 MM GAL/YR OF ETHANOL

BASE CASE

ENVIRONMENTAL

ACCT.	DESCRIPTION	# PCS.	MANHOURS S/C	MANHOURS DIRECT	MATERIAL $	LABOR $	TOTAL $
A	TOWERS	-			-		
M	DRUMS, TANKS & REACT.	10			290,200		
P	PUMPS, COMPR., ETC.	29			150,900		
T	HEAT EXCHANGERS	7			473,300		
G	SPECIAL EQUIPMENT	12			241,600		
H	HEATERS & STACKS	-			-		
	TOTAL EQUIPMENT (A-H)	58			1,156,000		
C	PIPING						
D	STRUCTURES						
E	ELECTRICAL						
K	INSTRUMENTATION						
F	FIREPROTECTION						
B	BUILDINGS						
J	FOUNDATIONS & EARTHWORK						
Q	SEWERS						
S	SITE DEVELOPMENT						
N	INSULATION						
R	PAINTING						
	TOTAL (C-R) ACCOUNTS						
	TOTAL (A-T) ACCOUNTS						3,140,000
V	INSURANCE & TAXES						
W	OVERSEAS SHIPPING						
	TOTAL V & W ACCOUNTS						
X	TEMPORARY CONSTRUCTION						
Y	FIELD OFFICE						
Z	EQUIP., TOOLS & SUPPLIES						
	TOTAL X, Y, & Z ACCOUNTS						
U	HOME OFFICE						
	GRAND TOTAL						

BADGER

ESTIMATE SUMMARY SHEET

AREA 800

CLIENT SERI

EST. NO. E-0461

LOCATION USGC, 2Q84

ISSUE	DATE	BY	CHKD.
I	8/15/84	MWB	
		MWB	

PLANT 5 MM GAL/YR OF ETHANOL INCL. BOILERS, FLAKT UNIT, TURBO GENERATOR AND OTHER UTILITIES

BASE CASE

ACCT.	DESCRIPTION	# PCS.	MANHOURS S/C	MANHOURS DIRECT	MATERIAL $	LABOR $	TOTAL $
A	TOWERS	-			-		
M	DRUMS, TANKS & REACT.	7			83,000		
P	PUMPS, COMPR., ETC.	21			512,000		
T	HEAT EXCHANGERS	-			-		
G	SPECIAL EQUIPMENT	16			3,575,000		
H	HEATERS & STACKS	2			2,900,000		
	TOTAL EQUIPMENT (A-H)	46			7,070,000		
C	PIPING						
D	STRUCTURES						
E	ELECTRICAL						
K	INSTRUMENTATION						
F	FIREPROTECTION						
B	BUILDINGS						
J	FOUNDATIONS & EARTHWORK						
Q	SEWERS						
S	SITE DEVELOPMENT						
N	INSULATION						
R	PAINTING						
	TOTAL (C-R) ACCOUNTS						
	TOTAL (A-T) ACCOUNTS						17,340,000
V	INSURANCE & TAXES						
W	OVERSEAS SHIPPING						
	TOTAL V & W ACCOUNTS						
X	TEMPORARY CONSTRUCTION						
Y	FIELD OFFICE						
Z	EQUIP., TOOLS & SUPPLIES						
	TOTAL X, Y, & Z ACCOUNTS						
U	HOME OFFICE						
	GRAND TOTAL						

BADGER

ESTIMATE SUMMARY SHEET

TOTAL PLANT

GRAND SUMMARY

(AREAS 100 THRU 800)

CLIENT SERI

EST. NO. E-0461

LOCATION USGC, 2Q84

ISSUE	DATE	BY	CHKD.
I	8/15/84	MWB	
		MWB	

PLANT 5 MM GAL/YR OF ETHANOL ALTERNATE CASE

ACCT.	DESCRIPTION	# PCS.	MANHOURS S/C	MANHOURS DIRECT	MATERIAL $	LABOR $	TOTAL $
A	TOWERS	6			272,000		
M	DRUMS, TANKS & REACT.	72			1,811,200		
P	PUMPS, COMPR., ETC.	176			1,580,900		
T	HEAT EXCHANGERS	42			1,637,300		
G	SPECIAL EQUIPMENT	82			4,582,600		
H	HEATERS & STACKS	1			1,580,000		
	TOTAL EQUIPMENT (A-H)	379			11,464,000		
C	PIPING						
D	STRUCTURES						
E	ELECTRICAL						
K	INSTRUMENTATION						
F	FIREPROTECTION						
B	BUILDINGS						
J	FOUNDATIONS & EARTHWORK						
Q	SEWERS						
S	SITE DEVELOPMENT						
N	INSULATION						
R	PAINTING						
	SUBTOTAL (A-T) ACCOUNTS				19,310,000	9,950,000	29,260,000
	PORTABLE EQ. & LAB EQUIP.				290,000	-	290,000
	TOTAL (A-T) ACCOUNTS		415,000		19,600,000	9,950,000	29,550,000
V	INSURANCE & TAXES						
W	OVERSEAS SHIPPING						
	TOTAL V & W ACCOUNTS						
X	TEMPORARY CONSTRUCTION						
Y	FIELD OFFICE						
Z	EQUIP., TOOLS & SUPPLIES						
	TOTAL X, Y, & Z ACCOUNTS						4,000,000
U	HOME OFFICE (EXCL. G & A +	OVHD)		228,000			6,650,000
	GRAND TOTAL						40,200,000

For exclusions, see overall summary listing.

BADGER

ESTIMATE SUMMARY SHEET

AREA 800

CLIENT SERI

EST. NO. E-0461

LOCATION USGC, 2Q84

ISSUE	DATE	BY	CHKD.
I	8/15/84	MWB	
		MWB	

PLANT 5 MM GAL/YR OF ETHANOL ALTERNATE CASE

INCL. BOILER, FLAKT UNIT, OTHER UTIL.

ACCT.	DESCRIPTION	# PCS.	MANHOURS S/C	MANHOURS DIRECT	MATERIAL $	LABOR $	TOTAL $
A	TOWERS	-			-		
M	DRUMS, TANKS & REACT.	7			83,000		
P	PUMPS, COMPR., ETC.	21			512,000		
T	HEAT EXCHANGERS	-			-		
G	SPECIAL EQUIPMENT	15			1,505,000		
H	HEATERS & STACKS	1			1,580,000		
	TOTAL EQUIPMENT (A-H)	44			3,680,000		
C	PIPING						
D	STRUCTURES						
E	ELECTRICAL						
K	INSTRUMENTATION						
F	FIREPROTECTION						
B	BUILDINGS						
J	FOUNDATIONS & EARTHWORK						
Q	SEWERS						
S	SITE DEVELOPMENT						
N	INSULATION						
R	PAINTING						
	TOTAL (C-R) ACCOUNTS						
	TOTAL (A-T) ACCOUNTS						9,740,000
V	INSURANCE & TAXES						
W	OVERSEAS SHIPPING						
	TOTAL V & W ACCOUNTS						
X	TEMPORARY CONSTRUCTION						
Y	FIELD OFFICE						
Z	EQUIP., TOOLS & SUPPLIES						
	TOTAL X, Y, & Z ACCOUNTS						
U	HOME OFFICE						
	GRAND TOTAL						

BADGER

ESTIMATE SUMMARY SHEET

TOTAL PLANT

GRAND SUMMARY

(AREAS 100 THRU 800)

CLIENT SERI

EST. NO. E-0461

LOCATION USGC, 2084

ISSUE	DATE	BY	CHKD.
I	8/15/84	MWB	
		MWB	

PLANT 25 MM GAL/YR OF ETHANOL

BASE CASE

ACCT.	DESCRIPTION	# PCS.	MANHOURS S/C	MANHOURS DIRECT	MATERIAL $	LABOR $	TOTAL $
A	TOWERS	6			730,000		
M	DRUMS, TANKS & REACT.	76			3,768,900		
P	PUMPS, COMPR., ETC.	190			3,476,800		
T	HEAT EXCHANGERS	45			4,441,000		
G	SPECIAL EQUIPMENT	105			17,531,700		
H	HEATERS & STACKS	2			10,400,000		
	TOTAL EQUIPMENT (A-H)	424			40,348,400		
C	PIPING						
D	STRUCTURES						
E	ELECTRICAL						
K	INSTRUMENTATION						
F	FIREPROTECTION						
B	BUILDINGS						
J	FOUNDATIONS & EARTHWORK						
O	SEWERS						
S	SITE DEVELOPMENT						
N	INSULATION						
R	PAINTING						
	SUBTOTAL (A-T) ACCOUNTS				59,080,000	24,500,000	83,580,000
	PORTABLE EQ. & LAB EQUIP.				600,000	-	600,000
	TOTAL (A-T) ACCOUNTS		1,050,000		59,680,000	24,500,000	84,180,000
V	INSURANCE & TAXES						
W	OVERSEAS SHIPPING						
	TOTAL V & W ACCOUNTS						
X	TEMPORARY CONSTRUCTION						
Y	FIELD OFFICE						
Z	EQUIP., TOOLS & SUPPLIES						
	TOTAL X, Y, & Z ACCOUNTS						9,580,000
U	HOME OFFICE (EXCL. G & A + OVHD)			330,000			9,640,000
	GRAND TOTAL						103,400,000

For exclusions, see overall summary listing.

BADGER

ESTIMATE SUMMARY SHEET

AREA 100

CLIENT SERI

EST. NO. E-0461

LOCATION USCG, 2084

ISSUE	DATE	BY	CHKD.
I	8/15/84	MWB	
		[illegible]	

PLANT 25 MM GAL/YR OF ETHANOL FEED UNIT

BASE CASE

ACCT.	DESCRIPTION	# PCS.	MANHOURS S/C	MANHOURS DIRECT	MATERIAL $	LABOR $	TOTAL $
A	TOWERS	-			-		
M	DRUMS, TANKS & REACT.	-			-		
P	PUMPS, COMPR., ETC.	1			3,000		
T	HEAT EXCHANGERS	-			-		
G	SPECIAL EQUIPMENT	7			194,000		
H	HEATERS & STACKS	-			-		
	TOTAL EQUIPMENT (A-H)	8			197,000		
C	PIPING						
D	STRUCTURES						
E	ELECTRICAL						
K	INSTRUMENTATION						
F	FIREPROTECTION						
B	BUILDINGS						
J	FOUNDATIONS & EARTHWORK						
Q	SEWERS						
S	SITE DEVELOPMENT						
N	INSULATION						
R	PAINTING						
	TOTAL (C-R) ACCOUNTS						
	TOTAL (A-T) ACCOUNTS						390.000
V	INSURANCE & TAXES						
W	OVERSEAS SHIPPING						
	TOTAL V & W ACCOUNTS						
X	TEMPORARY CONSTRUCTION						
Y	FIELD OFFICE						
Z	EQUIP., TOOLS & SUPPLIES						
	TOTAL X, Y, & Z ACCOUNTS						
U	HOME OFFICE						
	GRAND TOTAL						

BADGER

ESTIMATE SUMMARY SHEET

AREA 200

CLIENT SERI

EST. NO. E-0461

LOCATION USGC, 2Q84

ISSUE	DATE	BY	CHKD.
I	8/15/84	MWB	
		MWB	

PLANT 25 MM GAL/YR OF ETHANOL BASE CASE

ACID HYDROLYSIS UNIT

ACCT.	DESCRIPTION	# PCS.	MANHOURS S/C	MANHOURS DIRECT	MATERIAL $	LABOR $	TOTAL $
A	TOWERS	1			193,000		
M	DRUMS, TANKS & REACT.	27			1,475,000		
P	PUMPS, COMPR., ETC.	47			580,000		
T	HEAT EXCHANGERS	13			1,514,000		
G	SPECIAL EQUIPMENT	54			5,034,000		
H	HEATERS & STACKS	-			-		
	TOTAL EQUIPMENT (A-H)	142			8,796,000		
C	PIPING						
D	STRUCTURES						
E	ELECTRICAL						
K	INSTRUMENTATION						
F	FIREPROTECTION						
B	BUILDINGS						
J	FOUNDATIONS & EARTHWORK						
Q	SEWERS						
S	SITE DEVELOPMENT						
N	INSULATION						
R	PAINTING						
	TOTAL (C-R) ACCOUNTS						
	TOTAL (A-T) ACCOUNTS						17,700,000
V	INSURANCE & TAXES						
W	OVERSEAS SHIPPING						
	TOTAL V & W ACCOUNTS						
X	TEMPORARY CONSTRUCTION						
Y	FIELD OFFICE						
Z	EQUIP., TOOLS & SUPPLIES						
	TOTAL X, Y, & Z ACCOUNTS						
U	HOME OFFICE						
	GRAND TOTAL						

BADGER

ESTIMATE SUMMARY SHEET

AREA 300

CLIENT SERI

EST. NO. E-0461

LOCATION USGC, 2Q84

ISSUE	DATE	BY	CHKD.
I	8/15/84	MWB	
		MWB	

PLANT 25 MM GAL/YR OF ETHANOL FERMENTATION UNIT

BASE CASE

ACCT.	DESCRIPTION	# PCS.	MANHOURS S/C	MANHOURS DIRECT	MATERIAL $	LABOR $	TOTAL $
A	TOWERS	1			45,000		
M	DRUMS, TANKS & REACT.	13			625,000		
P	PUMPS, COMPR., ETC.	32			490,000		
T	HEAT EXCHANGERS	5			230,000		
G	SPECIAL EQUIPMENT	15			478,000		
H	HEATERS & STACKS	-			-		
	TOTAL EQUIPMENT (A-H)	66			1,868,000		
C	PIPING						
D	STRUCTURES						
E	ELECTRICAL						
K	INSTRUMENTATION						
F	FIREPROTECTION						
B	BUILDINGS						
J	FOUNDATIONS & EARTHWORK						
Q	SEWERS						
S	SITE DEVELOPMENT						
N	INSULATION						
R	PAINTING						
	TOTAL (C-R) ACCOUNTS						
	TOTAL (A-T) ACCOUNTS						4,180,000
V	INSURANCE & TAXES						
W	OVERSEAS SHIPPING						
	TOTAL V & W ACCOUNTS						
X	TEMPORARY CONSTRUCTION						
Y	FIELD OFFICE						
Z	EQUIP., TOOLS & SUPPLIES						
	TOTAL X, Y, & Z ACCOUNTS						
U	HOME OFFICE						
	GRAND TOTAL						

BADGER

ESTIMATE SUMMARY SHEET

AREA 400

CLIENT SERI

EST. NO. E-0461

LOCATION USGC, 2Q84

ISSUE	DATE	BY	CHKD.
I	8/15/84	MWB	
		MWB	

PLANT 25 MM GAL/YR OF ETHANOL — BASE CASE

ETHANOL UNIT

ACCT.	DESCRIPTION	# PCS.	MANHOURS S/C	MANHOURS DIRECT	MATERIAL $	LABOR $	TOTAL $
A	TOWERS	2			247,000		
M	DRUMS, TANKS & REACT.	6			117,000		
P	PUMPS, COMPR., ETC.	17			797,000		
T	HEAT EXCHANGERS	11			824,000		
G	SPECIAL EQUIPMENT	1			2,500,000		
H	HEATERS & STACKS	-			-		
	TOTAL EQUIPMENT (A-H)	37			4,485,000		
C	PIPING						
D	STRUCTURES						
E	ELECTRICAL						
K	INSTRUMENTATION						
F	FIREPROTECTION						
B	BUILDINGS						
J	FOUNDATIONS & EARTHWORK						
Q	SEWERS						
S	SITE DEVELOPMENT						
N	INSULATION						
R	PAINTING						
	TOTAL (C-R) ACCOUNTS						
	TOTAL (A-T) ACCOUNTS						7,500,000
V	INSURANCE & TAXES						
W	OVERSEAS SHIPPING						
	TOTAL V & W ACCOUNTS						
X	TEMPORARY CONSTRUCTION						
Y	FIELD OFFICE						
Z	EQUIP., TOOLS & SUPPLIES						
	TOTAL X, Y, & Z ACCOUNTS						
U	HOME OFFICE						
	GRAND TOTAL						

BADGER

ESTIMATE SUMMARY SHEET

AREA 500

CLIENT SERI

EST. NO. E-0461

LOCATION USGC, 2Q84

ISSUE	DATE	BY	CHKD.
I	8/15/84	MWB	
		MWB	

PLANT 25 MM GAL/YR OF ETHANOL FURFURAL UNIT

BASE CASE

ACCT.	DESCRIPTION	# PCS.	MANHOURS S/C	MANHOURS DIRECT	MATERIAL $	LABOR $	TOTAL $
A	TOWERS	2			245,000		
M	DRUMS, TANKS & REACT.	2			99,000		
P	PUMPS, COMPR., ETC.	12			35,000		
T	HEAT EXCHANGERS	8			561,000		
G	SPECIAL EQUIPMENT	-			-		
H	HEATERS & STACKS	-			-		
	TOTAL EQUIPMENT (A-H)	24			940,000		
C	PIPING						
D	STRUCTURES						
E	ELECTRICAL						
K	INSTRUMENTATION						
F	FIREPROTECTION						
B	BUILDINGS						
J	FOUNDATIONS & EARTHWORK						
Q	SEWERS						
S	SITE DEVELOPMENT						
N	INSULATION						
R	PAINTING						
	TOTAL (C-R) ACCOUNTS						
	TOTAL (A-T) ACCOUNTS						2,100,000
V	INSURANCE & TAXES						
W	OVERSEAS SHIPPING						
	TOTAL V & W ACCOUNTS						
X	TEMPORARY CONSTRUCTION						
Y	FIELD OFFICE						
Z	EQUIP., TOOLS & SUPPLIES						
	TOTAL X, Y, & Z ACCOUNTS						
U	HOME OFFICE						
	GRAND TOTAL						

BADGER

ESTIMATE SUMMARY SHEET

AREA 600

CLIENT SERI

EST. NO. E-0461

LOCATION USGC, 2Q84

ISSUE	DATE	BY	CHKD.
I	8/15/84	MWB	
		MWB	

PLANT 25 GAL/YR OF ETHANOL BASE CASE

TANK STORAGE & BUILDINGS

ACCT.	DESCRIPTION	# PCS.	MANHOURS S/C	MANHOURS DIRECT	MATERIAL $	LABOR $	TOTAL $
A	TOWERS	-			-		
M	DRUMS, TANKS & REACT.	12			653,000		
P	PUMPS, COMPR., ETC.	22			76,000		
T	HEAT EXCHANGERS	1			50,000		
G	SPECIAL EQUIPMENT	2			7,000		
H	HEATERS & STACKS	-			-		
	TOTAL EQUIPMENT (A-H)	37			786,000		
C	PIPING						
D	STRUCTURES						
E	ELECTRICAL						
K	INSTRUMENTATION						
F	FIREPROTECTION						
B	BUILDINGS						
J	FOUNDATIONS & EARTHWORK						
Q	SEWERS						
S	SITE DEVELOPMENT						
N	INSULATION						
R	PAINTING						
	SUBTOTAL (A-T) ACCOUNTS						3,180,000
	BLDGS/ROADS/PIPE RACKS						2,000,000
	TOTAL (A-T) ACCOUNTS						5,180,000
V	INSURANCE & TAXES						
W	OVERSEAS SHIPPING						
	TOTAL V & W ACCOUNTS						
X	TEMPORARY CONSTRUCTION						
Y	FIELD OFFICE						
Z	EQUIP., TOOLS & SUPPLIES						
	TOTAL X, Y, & Z ACCOUNTS						
U	HOME OFFICE						
	GRAND TOTAL						

BADGER

ESTIMATE SUMMARY SHEET

AREA 700

CLIENT SERI

EST. NO. E-0461

LOCATION USGC, 2Q84

ISSUE	DATE	BY	CHKD.
I	8/15/84	MWB	
		MWB	

PLANT 25 MM GAL/YR OF ETHANOL BASE CASE

ENVIRONMENTAL UNIT

ACCT.	DESCRIPTION	# PCS.	MANHOURS S/C	MANHOURS DIRECT	MATERIAL $	LABOR $	TOTAL $
A	TOWERS	-			-		
M	DRUMS, TANKS & REACT.	9			615,900		
P	PUMPS, COMPR., ETC.	30			356,800		
T	HEAT EXCHANGERS	7			1,262,000		
G	SPECIAL EQUIPMENT	12			646,700		
H	HEATERS & STACKS	-			-		
	TOTAL EQUIPMENT (A-H)	58			2,871,400		
C	PIPING						
D	STRUCTURES						
E	ELECTRICAL						
K	INSTRUMENTATION						
F	FIREPROTECTION						
B	BUILDINGS						
J	FOUNDATIONS & EARTHWORK						
Q	SEWERS						
S	SITE DEVELOPMENT						
N	INSULATION						
R	PAINTING						
	TOTAL (C-R) ACCOUNTS						
	TOTAL (A-T) ACCOUNTS						6,830,000
V	INSURANCE & TAXES						
W	OVERSEAS SHIPPING						
	TOTAL V & W ACCOUNTS						
X	TEMPORARY CONSTRUCTION						
Y	FIELD OFFICE						
Z	EQUIP., TOOLS & SUPPLIES						
	TOTAL X, Y, & Z ACCOUNTS						
U	HOME OFFICE						
	GRAND TOTAL						

BADGER

ESTIMATE SUMMARY SHEET

AREA 800

CLIENT SERI

EST. NO. E-0461

LOCATION USGC, 2Q84

ISSUE	DATE	BY	CHKD.
I	8/15/84	MWB	
		MWB	

PLANT 25 MM GAL/YR OF ETHANOL — BASE CASE
INCL. BOILERS, FLAKT UNIT, TURBO GENERATOR & OTHER UTILITIES

ACCT.	DESCRIPTION	# PCS.	MANHOURS S/C	MANHOURS DIRECT	MATERIAL $	LABOR $	TOTAL $
A	TOWERS	-			-		
M	DRUMS, TANKS & REACT.	7			184,000		
P	PUMPS, COMPR., ETC.	29			1,139,000		
T	HEAT EXCHANGERS	-			-		
G	SPECIAL EQUIPMENT	14			8,682,000		
H	HEATERS & STACKS	2			10,400,000		
	TOTAL EQUIPMENT (A-H)	52			20,405,000		
C	PIPING						
D	STRUCTURES						
E	ELECTRICAL						
K	INSTRUMENTATION						
F	FIREPROTECTION						
B	BUILDINGS						
J	FOUNDATIONS & EARTHWORK						
Q	SEWERS						
S	SITE DEVELOPMENT						
N	INSULATION						
R	PAINTING						
	SUBTOTAL (A-T) ACCOUNTS						36,500,000
	BUILDINGS & STRUCTURES						3,200,000
	TOTAL (A-T) ACCOUNTS						39,700,000
V	INSURANCE & TAXES						
W	OVERSEAS SHIPPING						
	TOTAL V & W ACCOUNTS						
X	TEMPORARY CONSTRUCTION						
Y	FIELD OFFICE						
Z	EQUIP., TOOLS & SUPPLIES						
	TOTAL X, Y, & Z ACCOUNTS						
U	HOME OFFICE						
	GRAND TOTAL						

BADGER

ESTIMATE SUMMARY SHEET

TOTAL PLANT

GRAND SUMMARY

(AREAS 100 THRU 800)

CLIENT SERI

EST. NO. E-0461

LOCATION USGC, 2Q84

ISSUE	DATE	BY	CHKD.
I	8/15/84	MWB	
		MWB	

PLANT 25 MM GAL/YR OF ETHANOL

ALTERNATE CASE

ACCT.	DESCRIPTION	# PCS.	MANHOURS S/C	MANHOURS DIRECT	MATERIAL $	LABOR $	TOTAL $
A	TOWERS	6			730,000		
M	DRUMS, TANKS & REACT.	85			3,949,900		
P	PUMPS, COMPR., ETC.	203			3,604,800		
T	HEAT EXCHANGERS	46			4,484,000		
G	SPECIAL EQUIPMENT	110			15,302,700		
H	HEATERS & STACKS	2			8,870,000		
	TOTAL EQUIPMENT (A-H)	452			36,941,400		
C	PIPING						
D	STRUCTURES						
E	ELECTRICAL						
K	INSTRUMENTATION						
F	FIREPROTECTION						
B	BUILDINGS						
J	FOUNDATIONS & EARTHWORK						
Q	SEWERS						
S	SITE DEVELOPMENT						
N	INSULATION						
R	PAINTING						
	SUBTOTAL (A-T) ACCOUNTS				55,592,000	23,800,000	79,392,000
	PORTABLE EQ. & LAB EQUIP.				600,000	-	600,000
	TOTAL (A-T) ACCOUNTS		1,000,000		56,192,000	23,800,000	79,992,000
V	INSURANCE & TAXES						
W	OVERSEAS SHIPPING						
	TOTAL V & W ACCOUNTS						
X	TEMPORARY CONSTRUCTION						
Y	FIELD OFFICE						
Z	EQUIP., TOOLS & SUPPLIES						
	TOTAL X, Y, & Z ACCOUNTS						9,500,000
U	HOME OFFICE (EXCL. G & A + OVHD)			337,000			9,808,000
	GRAND TOTAL						99,300,000

For exclusions, see overall summary listing.

BADGER

ESTIMATE SUMMARY SHEET

AREA 800

CLIENT SERI

EST. NO. E-0461

LOCATION USGC, 2084

ISSUE	DATE	BY	CHKD.
I	8/15/84	MWB	
		Papers	

PLANT 25 MM GAL/YR OF ETHANOL ALTERNATE CASE

INCL. BOILERS, FLAKT UNIT, TURBO GENERATOR, & OTHER UTILITIES

ACCT.	DESCRIPTION	# PCS.	MANHOURS S/C	MANHOURS DIRECT	MATERIAL $	LABOR $	TOTAL $
A	TOWERS	-			-		
M	DRUMS, TANKS & REACT.	7			184,000		
P	PUMPS, COMPR., ETC.	30			1,081,000		
T	HEAT EXCHANGERS	-			-		
G	SPECIAL EQUIPMENT	14			6,432,000		
H	HEATERS & STACKS	2			8,870,000		
	TOTAL EQUIPMENT (A-H)	53			16,567,000		
C	PIPING						
D	STRUCTURES						
E	ELECTRICAL						
K	INSTRUMENTATION						
F	FIREPROTECTION						
B	BUILDINGS						
J	FOUNDATIONS & EARTHWORK						
Q	SEWERS						
S	SITE DEVELOPMENT						
N	INSULATION						
R	PAINTING						
	SUBTOTAL (A-T) ACCOUNTS						31,800,000
	BUILDINGS & STRUCTURES						2,600,000
	TOTAL (A-T) ACCOUNTS						34,400,000
V	INSURANCE & TAXES						
W	OVERSEAS SHIPPING						
	TOTAL V & W ACCOUNTS						
X	TEMPORARY CONSTRUCTION						
Y	FIELD OFFICE						
Z	EQUIP., TOOLS & SUPPLIES						
	TOTAL X, Y, & Z ACCOUNTS						
U	HOME OFFICE						
	GRAND TOTAL						

BADGER

ESTIMATE SUMMARY SHEET

AREA 200

CLIENT SERI

EST. NO. E-0461

LOCATION USGC, 2Q84

ISSUE	DATE	BY	CHKD.
I	8/15/84	MWB	
		MWB	

PLANT 25 MM GAL/YR OF ETHANOL ALTERNATE CASE

ACID HYDROLYSIS UNIT

ACCT.	DESCRIPTION	# PCS.	MANHOURS S/C	MANHOURS DIRECT	MATERIAL $	LABOR $	TOTAL $
A	TOWERS	1			193,000		
M	DRUMS, TANKS & REACT.	36			1,656,000		
P	PUMPS, COMPR., ETC.	59			766,000		
T	HEAT EXCHANGERS	14			1,557,000		
G	SPECIAL EQUIPMENT	59			5,055,000		
H	HEATERS & STACKS	-			-		
	TOTAL EQUIPMENT (A-H)	169			9,227,000		
C	PIPING						
D	STRUCTURES						
E	ELECTRICAL						
K	INSTRUMENTATION						
F	FIREPROTECTION						
B	BUILDINGS						
J	FOUNDATIONS & EARTHWORK						
Q	SEWERS						
S	SITE DEVELOPMENT						
N	INSULATION						
R	PAINTING						
	TOTAL (C-R) ACCOUNTS						
	TOTAL (A-T) ACCOUNTS						18,812,000
V	INSURANCE & TAXES						
W	OVERSEAS SHIPPING						
	TOTAL V & W ACCOUNTS						
X	TEMPORARY CONSTRUCTION						
Y	FIELD OFFICE						
Z	EQUIP., TOOLS & SUPPLIES						
	TOTAL X, Y, & Z ACCOUNTS						
U	HOME OFFICE						
	GRAND TOTAL						

Document Control Page	1. SERI Report No. SERI/STR-231-3142	2. NTIS Accession No.	3. Recipient's Accession No.

4. Title and Subtitle
Economic Feasibility Study of an Acid Hydrolysis-Based Ethanol Plant, A Subcontract Report

5. Publication Date
June 1987

6.

7. Author(s)

8. Performing Organization Rept. No.

9. Performing Organization Name and Address
Badger Engineers, Inc.
One Broadway
Cambridge, MA 02142

10. Project/Task/Work Unit No.
5260.10

11. Contract (C) or Grant (G) No.
(C) ZX-3-03096-2
(G)

12. Sponsoring Organization Name and Address
Solar Energy Research Institute
A Division of Midwest Research Institute
1617 Cole Boulevard
Golden, Colorado 80401-3393

13. Type of Report & Period Covered
Technical Report

14.

15. Supplementary Notes
Technical Monitor: John Wright

16. Abstract (Limit: 200 words)
The report presents the conceptual design and economic analysis of a process to convert hardwood chips into fuel-grade ethanol. A key element of the technology is a novel plug-flow reactor developed at Dartmouth in which dilute sulfuric acid is used in a continuous, short residence time, high temperature reactor to hydrolyze susceptible fractions in the feed. In this study, reactor conditions have been specified that maximize the yield of fermentable sugars with furfural as the major by-product. Two design cases were analyzed: 25 million and 5 million gallons of ethanol per year. The economic analysis was carried out to determine the required ethanol selling price to yield a 15% discounted cash flow internal rate of return, and to calculate ethanol price sensitivity to feedstock price, capital cost, and furfural selling price.

17. Document Analysis

a. Descriptors
Hydrolysis, acid hydrolysis, ethanol, ethanol fuels, biomass conversion plants, feasibility studies, economic analysis, furfural

b. Identifiers/Open-Ended Terms

c. UC Categories

18. Availability Statement
National Technical Information Service
U.S. Department of Commerce
5285 Port Royal Road
Springfield, Virginia 22161

19. No. of Pages
516

20. Price
A22

Form No. 0069 (3-25-82)