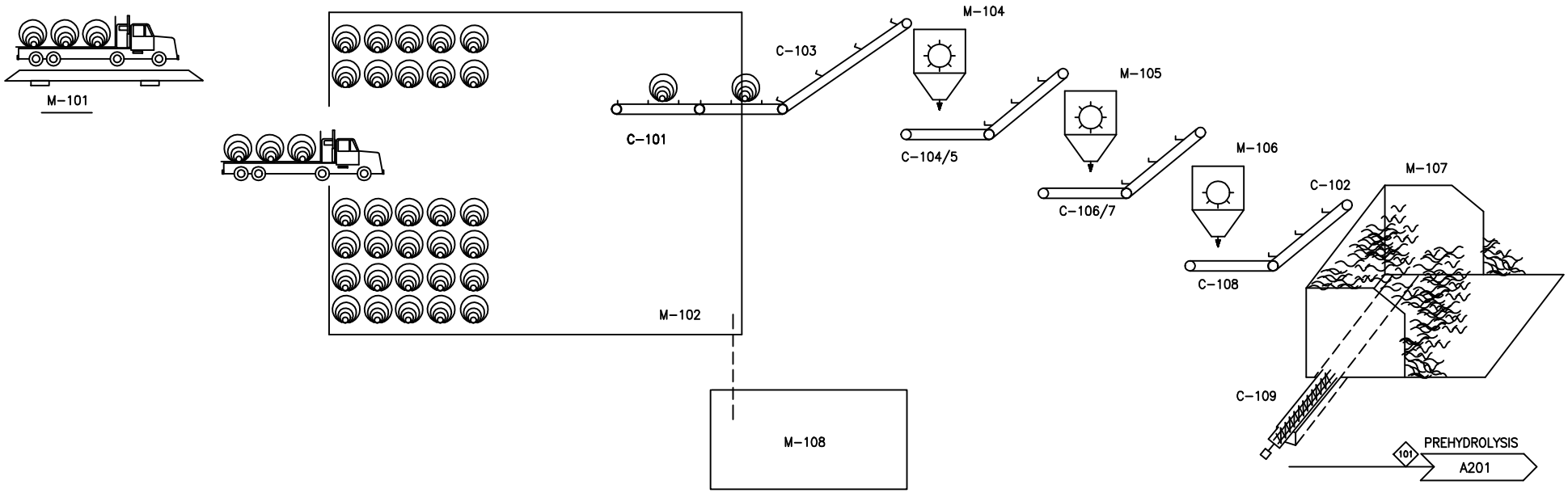

		101feed
Total flow	kg/hr	71,977
insoluble solids	%	52.1%
soluble solids	%	0.0%
temp.	°C	20
pressure	atm	1.00
vapor fraction		-
ethanol	kg/hr	-
water	kg/hr	34,477
glucose (ss)	kg/hr	-
xylose (ss)	kg/hr	-
arabinose (ss)	kg/hr	-
other sugars (ss)	kg/hr	-
cellobiose (ss)	kg/hr	-
glucose oligomers (ss)	kg/hr	-
xyolose oligomers (ss)	kg/hr	-
other oligomers (ss)	kg/hr	-
CSL (ss)	kg/hr	-
(NH4)2SO4 (ss)	kg/hr	-
NH4 acetate (ss)	kg/hr	-
Others (soluble solids)	kg/hr	11
Acetic Acid	kg/hr	-
Sulfuric Acid	kg/hr	-
Furfural	kg/hr	-
HMF	kg/hr	-
Carbon Dioxide	kg/hr	-
Methane	kg/hr	-
Oxygen	kg/hr	-
Nitrogen	kg/hr	-
Ammonia	kg/hr	-
NH4 OH	kg/hr	-
Others	kg/hr	-
Cellulose (is)	kg/hr	17,018
Xylan (is)	kg/hr	8,946
Arabinan (is)	kg/hr	750
Other Sugar Polymers (is)	kg/hr	416
Cellulase (is)	kg/hr	-
Biomass (is)	kg/hr	-
Zymo. (is)	kg/hr	-
Lignin (is)	kg/hr	6,948
Gypsum (is)	kg/hr	-
Ca(OH)2 (is)	kg/hr	-
Others (is)	kg/hr	3,412
*Average Density	g/ml	1.264

VER	DESCRIPTION	DATE
A	SUBCONTRACTOR UPDATE	10/98
B	BASECASE UPDATE	11/98
C	DESIGN REPORT	2/99
		LL 2/23/99

NATIONAL RENEWABLE ENERGY LABORATORY
Biotechnology Center For Fuels And Chemicals

SECTION A100
CORN STOVER HANDLING

PFD-P100-A101 C

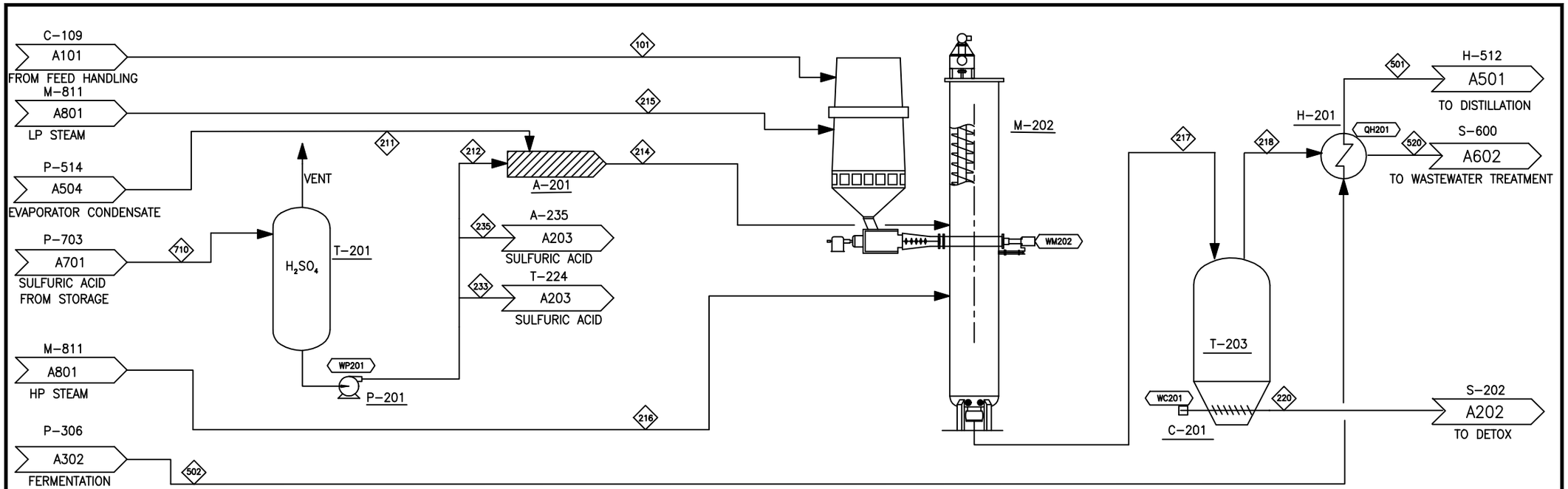

		101 feed	211 evap. cond.	212 sulfuric	214 sulfuric & cond.	215 LP steam	216 HP steam	217 pretreated feed	520 to WW treatment	220 to detox
Total flow	kg/hr	71,977	23,310	414	23,725	7,622	18,191	121,514	20,021	101,493
insoluble solids	%	52.1%	0.0%	0.0%	0.0%	0.0%	0.0%	21.8%	0.0%	26.0%
soluble solids	%	0.0%	0.3%	0.0%	0.3%	0.0%	0.0%	8.8%	0.1%	10.5%
temp.	°C	20	73	20	73	170	265	190	99	101
pressure	atm	1.00	3.00	3.40	4.00	4.42	13.00	12.21	1.00	1.00
vapor fraction		-	-	-	-	1.00	1.00	-	1.00	-
ethanol	kg/hr	-	22	-	22	-	-	22	16	5
water	kg/hr	34,477	23,080	-	23,080	7,622	18,191	82,375	19,472	62,902
glucose (ss)	kg/hr	-	-	-	-	-	-	1,229	-	1,229
xylose (ss)	kg/hr	-	-	-	-	-	-	7,624	-	7,624
arabinose (ss)	kg/hr	-	-	-	-	-	-	639	-	639
other sugars (ss)	kg/hr	-	-	-	-	-	-	347	-	347
cellobiose (ss)	kg/hr	-	-	-	-	-	-	126	-	126
glucose oligomers (ss)	kg/hr	-	-	-	-	-	-	140	-	140
xyolose oligomers (ss)	kg/hr	-	-	-	-	-	-	485	-	485
other oligomers (ss)	kg/hr	-	-	-	-	-	-	-	-	-
CSL (ss)	kg/hr	-	64	-	64	-	-	64	15	49
(NH4)2SO4 (ss)	kg/hr	-	-	-	-	-	-	-	-	-
NH4 acetate (ss)	kg/hr	-	-	-	-	-	-	-	-	-
Others (soluble solids)	kg/hr	11	-	-	-	-	-	11	-	11
Acetic Acid	kg/hr	-	48	-	48	-	-	839	53	786
Sulfuric Acid	kg/hr	-	-	414	414	-	-	414	-	414
Furfural	kg/hr	-	85	-	85	-	-	705	433	272
HMF	kg/hr	-	6	-	6	-	-	49	30	19
Carbon Dioxide	kg/hr	-	-	-	-	-	-	-	-	-
Methane	kg/hr	-	-	-	-	-	-	-	-	-
Oxygen	kg/hr	-	-	-	-	-	-	-	-	-
Nitrogen	kg/hr	-	-	-	-	-	-	-	-	-
Ammonia	kg/hr	-	-	-	-	-	-	-	-	-
NH4 OH	kg/hr	-	-	-	-	-	-	-	-	-
Others	kg/hr	-	6	-	6	-	-	6	1	5
Cellulose (is)	kg/hr	17,018	-	-	-	-	-	15,673	-	15,674
Xylan (is)	kg/hr	8,946	-	-	-	-	-	447	-	447
Arabinan (is)	kg/hr	750	-	-	-	-	-	37	-	37
Other Sugar Polymers (is)	kg/hr	416	-	-	-	-	-	21	-	21
Cellulase (is)	kg/hr	-	-	-	-	-	-	-	-	-
Biomass (is)	kg/hr	-	-	-	-	-	-	-	-	-
Zymo. (is)	kg/hr	-	-	-	-	-	-	-	-	-
Lignin (is)	kg/hr	6,948	-	-	-	-	-	6,948	-	6,948
Gypsum (is)	kg/hr	-	-	-	-	-	-	-	-	-
Ca(OH)2 (is)	kg/hr	-	-	-	-	-	-	-	-	-
Others (is)	kg/hr	3,412	-	-	-	-	-	3,312	-	3,312
*Average Density	g/ml	1.264	0.946	3.102	0.951	0.002	0.005	1.021	0.024	1.140

VER	DESCRIPTION	DATE
A	SUBCONTRACTOR UPDATE	4/98
B	BASECASE UPDATE	9/98
C	DESIGN REPORT	2/99
		LL 2/23/99

NREL NATIONAL RENEWABLE ENERGY LABORATORY
Biotechnology Center For Fuels And Chemicals

SECTION A200
PREHYDROLYSIS

PFD-P100-A201 C

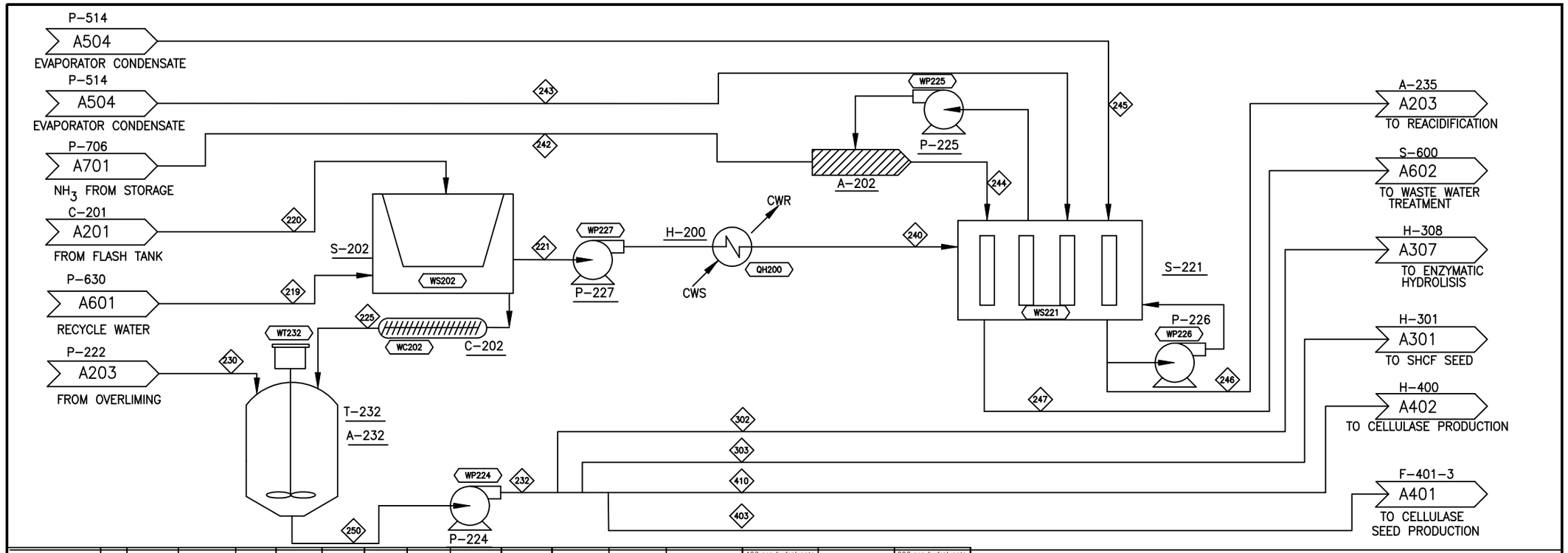

		219 recycle water	220 pretreated hydrolyzate	225 solids	240 liquid	242 ammonia	243 evap. cond.	245 evap. cond.	246 post IX liquid	247 to WW treatment	230 detoxified liquid	250 mix cellulose & hemi	303 pre-hydrolyzate to ferm. seed pdctn	403 pre-hydrolyzate to cellulase seed pdctn	410 pre-hydrolyzate to cellulase pdctn	302 pre-hydrolyzate to enzymatic hydrolysis
Total flow	kg/hr	62,845	101,493	66,181	98,157	311	18,005	13,960	100,802	29,632	101,614	167,795	15,937	316	6,007	145,536
insoluble solids	%	0.2%	26.0%	40.0%	0.1%	0.0%	0.0%	0.0%	0.1%	0.0%	0.0%	15.8%	15.8%	15.6%	15.8%	15.8%
soluble solids	%	1.0%	10.5%	4.9%	8.2%	0.0%	0.0%	0.3%	8.0%	4.1%	7.9%	6.8%	6.8%	6.7%	6.7%	6.8%
temp.	°C	47	101	75	40	20	73	73	40	40	51	59	59	59	59	59
pressure	atm	1.00	1.00	1.00	1.00	17.00	3.00	3.00	3.00	3.00	1.00	1.00	1.00	1.00	1.00	1.00
vapor fraction		-	-	-	-	-	-	-	-	-	-	-	-	-	-	-
ethanol	kg/hr	9	5	4	10	-	-	13	23	-	23	27	3	-	1	24
water	kg/hr	61,082	62,902	35,755	88,230	-	18,005	13,821	91,676	28,353	92,637	128,391	12,194	242	4,597	111,360
glucose (ss)	kg/hr	-	1,229	355	875	-	-	-	875	-	873	1,227	117	2	44	1,064
xylose (ss)	kg/hr	64	7,624	2,217	5,471	-	-	-	5,471	-	5,459	7,676	729	15	275	6,658
arabinose (ss)	kg/hr	104	639	214	528	-	-	-	528	-	527	741	70	1	27	643
other sugars (ss)	kg/hr	56	347	116	287	-	-	-	287	-	286	402	38	1	15	349
cellobiose (ss)	kg/hr	29	126	45	110	-	-	-	110	-	110	154	15	0	5	134
glucose oligomers (ss)	kg/hr	219	140	104	255	-	-	-	255	-	255	358	34	1	13	311
xyolose oligomers (ss)	kg/hr	94	485	167	412	-	-	-	412	-	411	578	55	1	21	501
other oligomers (ss)	kg/hr	-	-	-	-	-	-	-	-	-	-	-	-	-	-	-
CSL (ss)	kg/hr	91	49	41	100	-	-	39	139	-	138	179	17	0	6	155
(NH4)2SO4 (ss)	kg/hr	-	-	-	-	-	-	-	-	417	-	-	-	-	-	-
NH4 acetate (ss)	kg/hr	-	-	-	-	-	-	-	-	804	-	-	-	-	-	-
Others (soluble solids)	kg/hr	1	11	4	9	-	-	-	9	-	9	13	1	-	0	11
Acetic Acid	kg/hr	152	786	270	667	-	-	29	70	-	69	340	32	1	12	295
Sulfuric Acid	kg/hr	20	414	126	310	-	-	-	-	-	-	126	12	0	4	109
Furfural	kg/hr	290	272	162	400	-	-	51	451	-	450	612	58	1	22	531
HMF	kg/hr	20	19	11	27	-	-	4	31	-	31	42	4	-	1	37
Carbon Dioxide	kg/hr	-	-	-	-	-	-	-	-	-	-	-	-	-	-	-
Methane	kg/hr	-	-	-	-	-	-	-	-	-	-	-	-	-	-	-
Oxygen	kg/hr	-	-	-	-	-	-	-	-	-	-	-	-	-	-	-
Nitrogen	kg/hr	-	-	-	-	-	-	-	-	-	-	-	-	-	-	-
Ammonia	kg/hr	5	-	1	4	311	-	-	-	4	-	1	-	-	-	1
NH4 OH	kg/hr	-	-	-	-	-	-	-	-	54	-	-	-	-	-	-
Others	kg/hr	457	5	133	329	-	-	4	333	-	332	466	44	1	17	404
Cellulose (is)	kg/hr	7	15,674	15,602	78	-	-	-	78	-	0	15,603	1,482	29	559	13,533
Xylan (is)	kg/hr	2	447	447	2	-	-	-	2	-	-	447	42	1	16	388
Arabinan (is)	kg/hr	-	37	37	-	-	-	-	-	-	-	37	4	-	1	32
Other Sugar Polymers (is)	kg/hr	-	21	21	-	-	-	-	-	-	-	21	2	-	1	18
Cellulase (is)	kg/hr	30	-	30	-	-	-	-	-	-	-	30	3	-	1	26
Biomass (is)	kg/hr	12	-	12	-	-	-	-	-	-	-	12	1	-	0	11
Zymo. (is)	kg/hr	57	-	56	0	-	-	-	0	-	-	56	5	-	2	49
Lignin (is)	kg/hr	29	6,948	6,942	35	-	-	-	35	-	-	6,942	659	13	248	6,021
Gypsum (is)	kg/hr	-	-	-	-	-	-	-	-	-	-	4	0	-	-	3
Ca(OH)2 (is)	kg/hr	-	-	-	-	-	-	-	-	-	4	-	-	-	-	-
Others (is)	kg/hr	14	3,312	3,310	17	-	-	-	17	-	-	3,310	315	6	118	2,871
Average Density	g/ml	0.978	1.140	1.229	1.014	0.610	0.945	0.946	1.013	0.929	1.001	1.090	1.090	1.090	1.090	1.090

VER	DESCRIPTION	DATE
A	SUBCONTRACTOR UPDATE	5/97
B	BASECASE UPDATE	9/98
C	DESIGN REPORT	2/99
		LL 2/23/99

NREL NATIONAL RENEWABLE ENERGY LABORATORY
Biotechnology Center For Fuels And Chemicals

SECTION A200
DETOXIFICATION

PFD-P100-A202 C

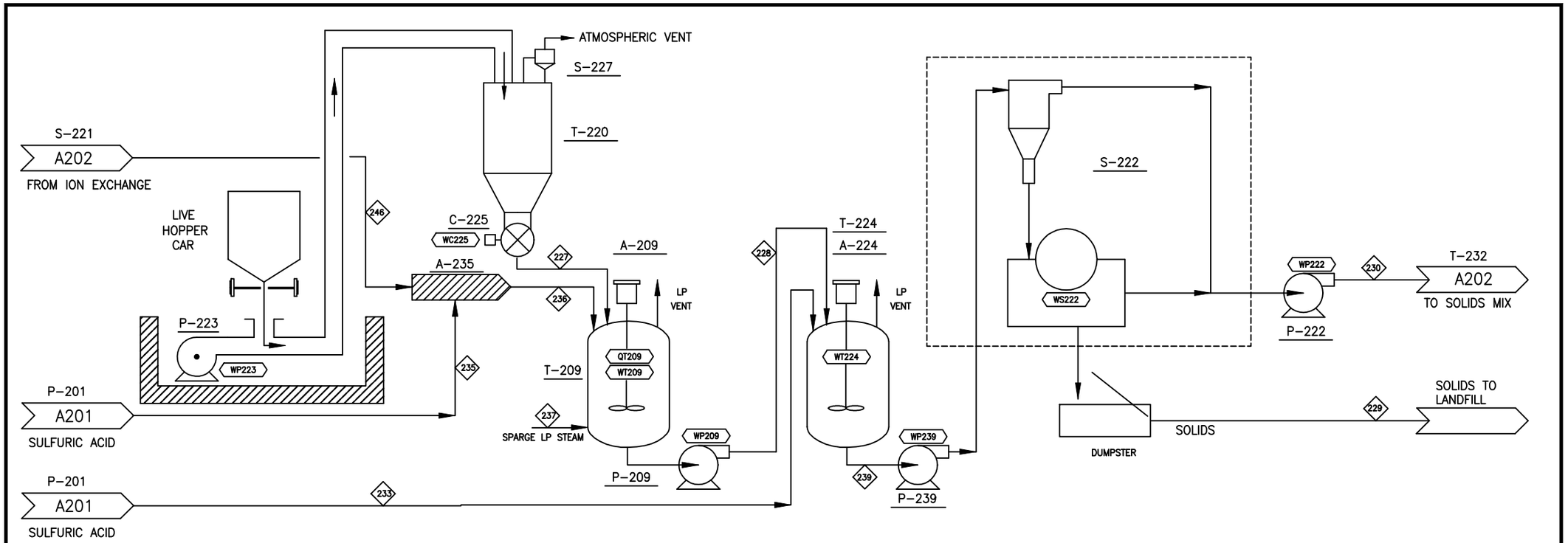

		246 post IX liquid	227 lime	235 sulfuric acid	233 sulfuric acid	237 LP steam	239 post overliming	229 gypsum solids	230 detoxified liquid
Total flow	kg/hr	100,802	337	302	144	1,167	102,752	1,137	101,614
insoluble solids	%	0.1%	100.0%	0.0%	0.0%	0.0%	0.9%	80.0%	0.0%
soluble solids	%	8.0%	0.0%	0.0%	0.0%	0.0%	7.9%	1.6%	7.9%
temp.	°C	40	20	20	20	170	51	51	51
pressure	atm	3.00	1.00	3.40	3.40	4.42	1.00	1.00	1.00
vapor fraction		-	-	-	-	1.00	-	-	-
ethanol	kg/hr	23	-	-	-	-	23	-	23
water	kg/hr	91,676	-	-	-	1,167	92,844	207	92,637
glucose (ss)	kg/hr	875	-	-	-	-	875	2	873
xylose (ss)	kg/hr	5,471	-	-	-	-	5,471	12	5,459
arabinose (ss)	kg/hr	528	-	-	-	-	528	1	527
other sugars (ss)	kg/hr	287	-	-	-	-	287	0	286
cellobiose (ss)	kg/hr	110	-	-	-	-	110	0	110
glucose oligomers (ss)	kg/hr	255	-	-	-	-	255	0	255
xyolose oligomers (ss)	kg/hr	412	-	-	-	-	412	1	411
other oligomers (ss)	kg/hr	-	-	-	-	-	-	-	-
CSL (ss)	kg/hr	139	-	-	-	-	139	0	138
(NH4)2SO4 (ss)	kg/hr	-	-	-	-	-	-	-	-
NH4 acetate (ss)	kg/hr	-	-	-	-	-	-	-	-
Others (soluble solids)	kg/hr	9	-	-	-	-	9	-	9
Acetic Acid	kg/hr	70	-	-	-	-	70	-	69
Sulfuric Acid	kg/hr	-	-	302	144	-	-	-	-
Furfural	kg/hr	451	-	-	-	-	451	1	450
HMF	kg/hr	31	-	-	-	-	31	-	31
Carbon Dioxide	kg/hr	-	-	-	-	-	-	-	-
Methane	kg/hr	-	-	-	-	-	-	-	-
Oxygen	kg/hr	-	-	-	-	-	-	-	-
Nitrogen	kg/hr	-	-	-	-	-	-	-	-
Ammonia	kg/hr	-	-	-	-	-	-	-	-
NH4OH	kg/hr	-	-	-	-	-	-	-	-
Others	kg/hr	333	-	-	-	-	333	1	332
Cellulose (is)	kg/hr	78	-	-	-	-	78	78	0
Xylan (is)	kg/hr	2	-	-	-	-	2	2	-
Arabinan (is)	kg/hr	-	-	-	-	-	-	-	-
Other Sugar Polymers (is)	kg/hr	-	-	-	-	-	-	-	-
Cellulase (is)	kg/hr	-	-	-	-	-	-	-	-
Biomass (is)	kg/hr	-	-	-	-	-	-	-	-
Zymo. (is)	kg/hr	0	-	-	-	-	0	0	-
Lignin (is)	kg/hr	35	-	-	-	-	35	35	-
Gypsum (is)	kg/hr	-	-	-	-	-	782	778	-
Ca(OH)2 (is)	kg/hr	-	337	-	-	-	-	-	4
Others (is)	kg/hr	17	-	-	-	-	17	17	-
*Average Density	g/ml	1.013	2.343	3.102	3.102	0.002	1.011	1.935	1.001

VER	DESCRIPTION	DATE
A	SUBCONTRACTOR UPDATE	4/98
B	BASECASE UPDATE	9/98
C	DESIGN REPORT	2/99
		LL 2/23/99

NATIONAL RENEWABLE ENERGY LABORATORY
Biotechnology Center For Fuels And Chemicals

SECTION A200
LIME ADDITION

PFD-P100-A203 C

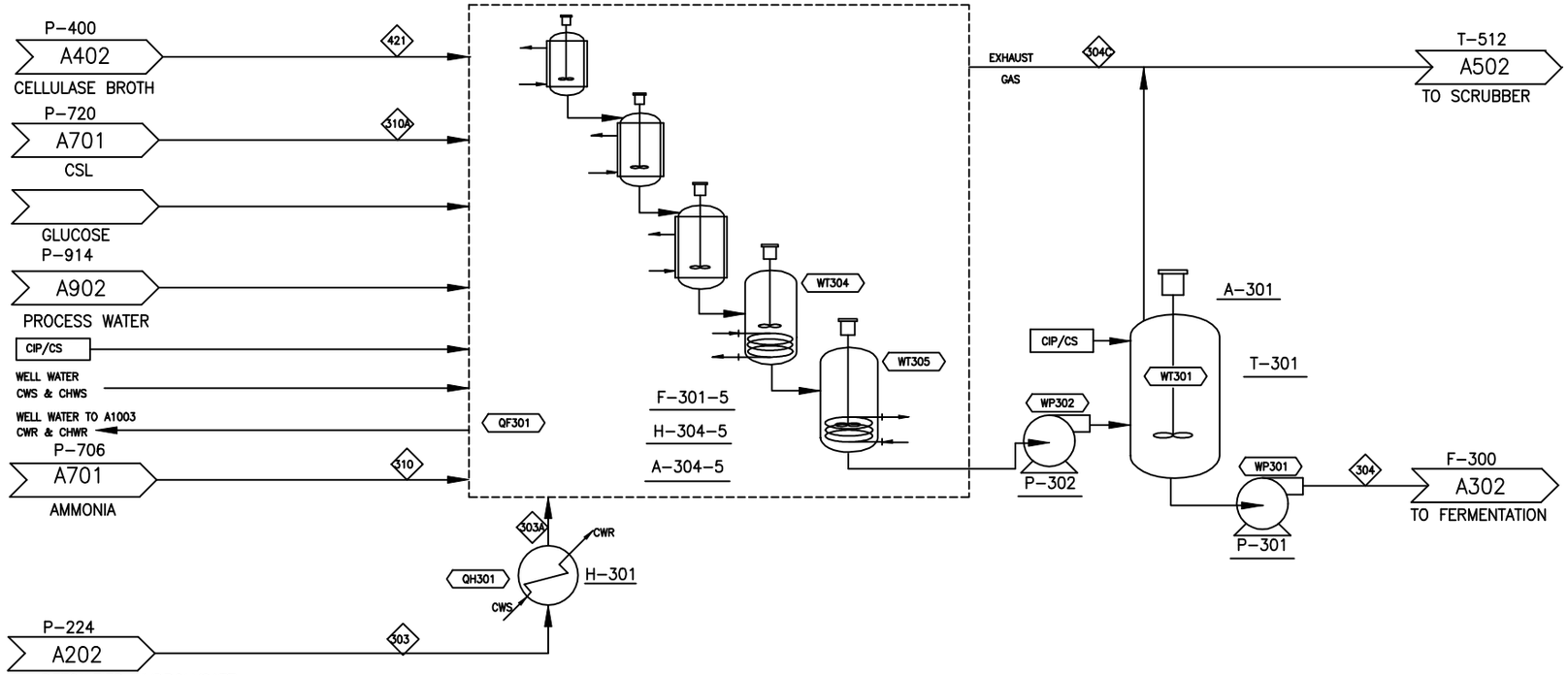

		303 pre-hydrolyzate from detox.	310 ammonia	905 process water	310A CSL	421 from cellulase pdctn	seed production broth	304c exhaust gas to scrubber	304 to fermentation
Total flow	kg/hr	15,937	4	0	270	1,784	17,995	466	17,529
insoluble solids	%	15.8%	0.0%	0.0%	0.0%	5.2%	13.0%	0.0%	13.4%
soluble solids	%	6.8%	0.0%	0.0%	100.0%	1.8%	3.5%	0.0%	3.6%
temp.	°C	59	35	-	35	28	-	30	30
pressure	atm	1.00	1.00	-	1.00	1.66	-	1.00	1.00
vapor fraction		-	1.00	-	-	-	-	1.00	-
ethanol	kg/hr	3	-	-	-	-	495	4	490
water	kg/hr	12,194	-	-	-	1,623	13,789	8	13,781
glucose (ss)	kg/hr	117	-	-	-	-	29	-	29
xylose (ss)	kg/hr	729	-	-	-	-	73	-	73
arabinose (ss)	kg/hr	70	-	-	-	-	70	-	70
other sugars (ss)	kg/hr	38	-	-	-	-	38	-	38
cellobiose (ss)	kg/hr	15	-	-	-	1	16	-	16
glucose oligomers (ss)	kg/hr	34	-	-	-	6	40	-	40
xyolose oligomers (ss)	kg/hr	55	-	-	-	4	59	-	59
other oligomers (ss)	kg/hr	-	-	-	-	-	-	-	-
CSL (ss)	kg/hr	17	-	-	270	20	306	-	306
(NH4)2SO4 (ss)	kg/hr	-	-	-	-	-	-	-	-
NH4 acetate (ss)	kg/hr	-	-	-	-	-	-	-	-
Others (soluble solids)	kg/hr	1	-	-	-	-	1	-	1
Acetic Acid	kg/hr	32	-	-	-	4	54	-	54
Sulfuric Acid	kg/hr	12	-	-	-	1	13	-	13
Furfural	kg/hr	58	-	-	-	3	62	0	61
HMF	kg/hr	4	-	-	-	0	4	-	4
Carbon Dioxide	kg/hr	-	-	-	-	-	465	445	20
Methane	kg/hr	-	-	-	-	-	-	-	-
Oxygen	kg/hr	-	-	-	-	-	9	9	-
Nitrogen	kg/hr	-	-	-	-	-	-	-	-
Ammonia	kg/hr	-	4	-	-	-	-	-	-
NH4 OH	kg/hr	-	-	-	-	-	-	-	-
Others	kg/hr	44	-	-	-	28	130	-	130
Cellulose (is)	kg/hr	1,482	-	-	-	-	1,185	-	1,185
Xylan (is)	kg/hr	42	-	-	-	2	45	-	45
Arabinan (is)	kg/hr	4	-	-	-	-	4	-	4
Other Sugar Polymers (is)	kg/hr	2	-	-	-	-	2	-	2
Cellulase (is)	kg/hr	3	-	-	-	26	29	-	29
Biomass (is)	kg/hr	1	-	-	-	10	12	-	12
Zymo. (is)	kg/hr	5	-	-	-	1	39	-	39
Lignin (is)	kg/hr	659	-	-	-	36	695	-	695
Gypsum (is)	kg/hr	0	-	-	-	-	0	-	0
Ca(OH)2 (is)	kg/hr	-	-	-	-	-	-	-	-
Others (is)	kg/hr	315	-	-	-	17	331	-	331
Average Density	g/ml	1.090	0.001	-	0.984	1.025	-	0.002	1.073

VER	DESCRIPTION	DATE
A	SUBCONTRACTOR UPDATE	4/98
B	BASECASE UPDATE	9/98
C	DESIGN REPORT	2/99
		LL 2/23/99

NREL NATIONAL RENEWABLE ENERGY LABORATORY
Biotechnology Center For Fuels And Chemicals

SECTION A300
SHCF SEED FERMENTATION

PFD-P100-A301 C

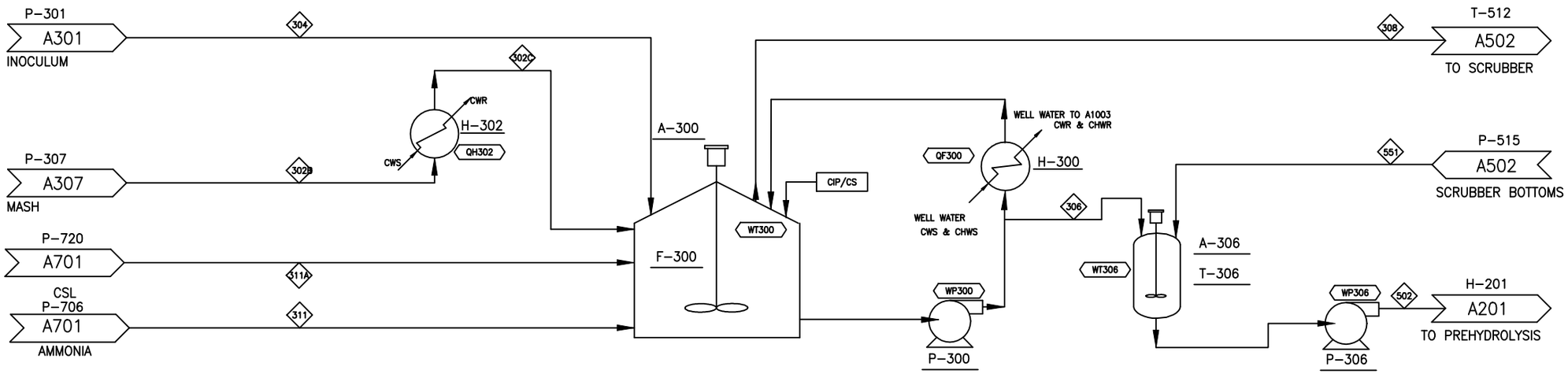

		302 hydrolysate	304 inoculum from ferm. seed pdctn	311A CSL	311 ammonia	fermentation broth compostion	%	308 vent to scrubber	306 to beer well	%	551 scrubber bottoms	502 to beer stipper	%
Total flow	kg/hr	157,136	17,529	438	71	175,175	100%	8,264	166,911	100%	6,827	173,737	100%
insoluble solids	%	8.1%	13.4%	0.0%	0.0%	7.7%		0.0%	8.4%		0.0%	8.0%	
soluble solids	%	13.3%	3.6%	100.0%	0.0%	13.4%		0.0%	3.6%		0.0%	3.5%	
temp.	°C	50	30	35	35	30		30	30		30	30	
pressure	atm	1.00	1.00	1.00	1.00	1.00		1.00	1.00		0.90	0.90	
vapor fraction		-	-	-	1.00	-		1.00	-		-	-	
ethanol	kg/hr	24	490	-	-	515	0.29%	139	9,090	5.53%	175	9,265	5.33%
water	kg/hr	121,909	13,781	-	-	135,689	77%	141	133,228	80%	6,640	139,868	80.5%
glucose (ss)	kg/hr	11,891	29	-	-	13,457	7.68%	-	135	0.08%	-	135	0.08%
xylose (ss)	kg/hr	6,658	73	-	-	6,731	3.84%	-	1,683	1.01%	-	1,683	0.97%
arabinose (ss)	kg/hr	643	70	-	-	713	0.41%	-	663	0.40%	-	663	0.38%
other sugars (ss)	kg/hr	349	38	-	-	387	0.22%	-	360	0.22%	-	360	0.21%
cellobiose (ss)	kg/hr	142	16	-	-	158	0.09%	-	183	0.11%	-	183	0.11%
glucose oligomers (ss)	kg/hr	349	40	-	-	389	0.22%	-	1,351	0.81%	-	1,351	0.78%
xyolose oligomers (ss)	kg/hr	532	59	-	-	592	0.34%	-	592	0.35%	-	592	0.34%
other oligomers (ss)	kg/hr	-	-	-	-	-	0.00%	-	-	0.00%	-	-	0.00%
CSL (ss)	kg/hr	284	306	438	-	1,029	0.59%	1	1,028	0.62%	1	1,029	0.59%
(NH4)2SO4 (ss)	kg/hr	-	-	-	-	-	0.00%	-	-	0.00%	-	-	0.00%
NH4 acetate (ss)	kg/hr	-	-	-	-	-	0.00%	-	-	0.00%	-	-	0.00%
Others (soluble solids)	kg/hr	12	1	-	-	13	0.01%	-	13	0.01%	-	13	0.01%
Acetic Acid	kg/hr	322	54	-	-	375	0.21%	0	805	0.48%	0	806	0.46%
Sulfuric Acid	kg/hr	115	13	-	-	128	0.07%	-	128	0.08%	-	128	0.07%
Furfural	kg/hr	553	61	-	-	614	0.35%	4	610	0.37%	4	614	0.35%
HMF	kg/hr	38	4	-	-	42	0.02%	0	42	0.02%	0	42	0.02%
Carbon Dioxide	kg/hr	-	20	-	-	20	0.01%	7,910	214	4.87%	8	223	0.13%
Methane	kg/hr	-	-	-	-	-	0.00%	-	-	0.00%	-	-	0.00%
Oxygen	kg/hr	-	-	-	-	-	0.00%	67	-	0.00%	1	1	0.00%
Nitrogen	kg/hr	0	-	-	-	0	0.00%	0	-	0.00%	-	-	0.00%
Ammonia	kg/hr	1	-	-	71	73	0.04%	-	6	0.00%	-	6	0.00%
NH4 OH	kg/hr	-	-	-	-	-	0.00%	-	-	0.00%	-	-	0.00%
Others	kg/hr	589	130	-	-	719	0.41%	-	2,823	1.69%	-	2,823	1.62%
Cellulose (is)	kg/hr	2,707	1,185	-	-	2,355	1.34%	-	2,355	1.41%	-	2,355	1.36%
Xylan (is)	kg/hr	403	45	-	-	447	0.26%	-	447	0.27%	-	447	0.26%
Arabinan (is)	kg/hr	34	4	-	-	37	0.02%	-	37	0.02%	-	37	0.02%
Other Sugar Polymers (is)	kg/hr	18	2	-	-	20	0.01%	-	20	0.01%	-	20	0.01%
Cellulase (is)	kg/hr	194	29	-	-	223	0.13%	-	223	0.13%	-	223	0.13%
Biomass (is)	kg/hr	78	12	-	-	90	0.05%	-	90	0.00%	-	90	0.05%
Zymo. (is)	kg/hr	58	39	-	-	97	0.06%	-	523	0.31%	-	523	0.30%
Lignin (is)	kg/hr	6,251	695	-	-	6,946	3.97%	-	6,946	4.16%	-	6,946	4.00%
Gypsum (is)	kg/hr	3	0	-	-	4	0.00%	-	4	0.00%	-	4	0.00%
Ca(OH)2 (is)	kg/hr	-	-	-	-	-	0.00%	-	-	0.00%	-	-	0.00%
Others (is)	kg/hr	2,981	331	-	-	3,312	1.89%	-	3,312	1.98%	-	3,312	1.91%
*Average Density	g/ml	-	1.073	0.984	0.001	-	-	-	-	-	0.983	0.965	1.000

VER	DESCRIPTION	DATE
A	SUBCONTRACTOR UPDATE	4/98
B	BASECASE UPDATE	9/98
C	DESIGN REPORT	2/99
		LL 2/23/99

NREL NATIONAL RENEWABLE ENERGY LABORATORY
Biotechnology Center For Fuels And Chemicals

SECTION A300
PRODUCTION FERMENTATION

PFD-P100-A302 C

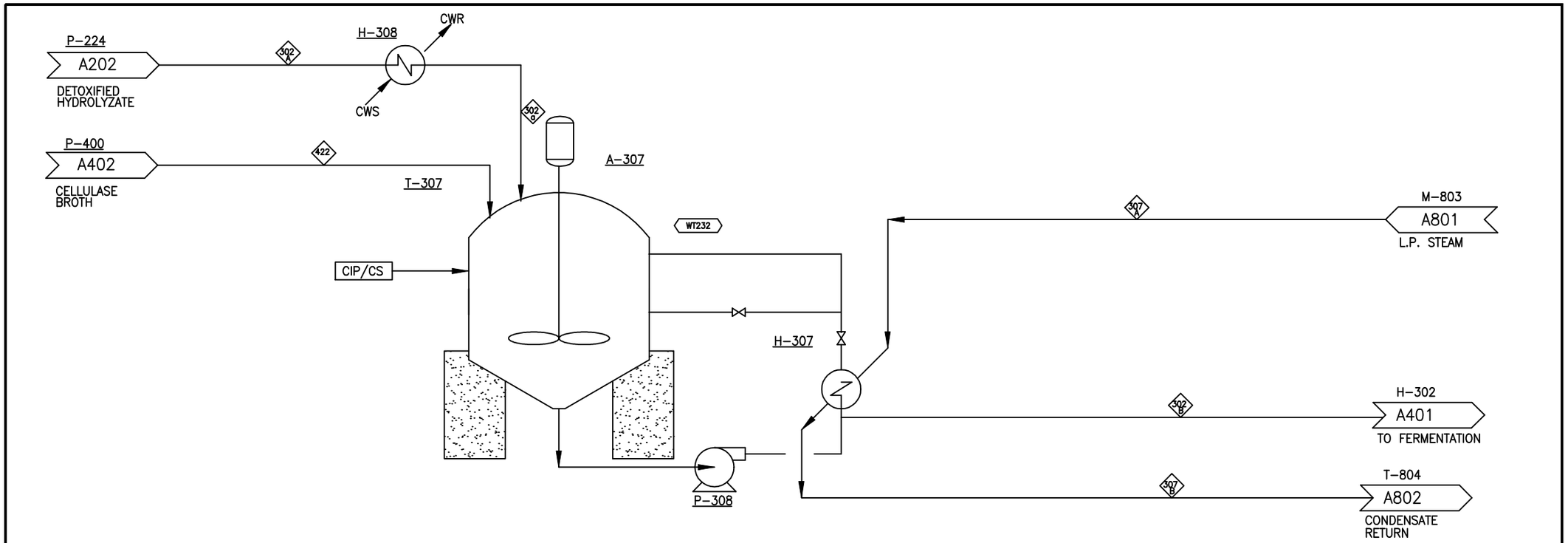

		302A pre-hydrolyzate	content %	422 cellulase broth	hydolysis slurry	%glu	307A LP to hydrolysis warmer	307B steam condensate	302B to fermentation	%
Total flow	kg/hr	145,536	0.0%	11,600	157,136	0.00%	10,149	10,149	157,136	100%
insoluble solids	%	15.8%	0.0%	5.2%	15.0%	0.0%	0.0%	0.0%	8.1%	0.0%
soluble solids	%	6.8%	0.0%	1.8%	6.4%	0.0%	0.0%	0.0%	13.3%	0.0%
temp.	°C	59	-	28	50	-	170	148	50	-
pressure	atm	1.00	-	1.66	1.00	-	4.42	4.42	1.00	-
vapor fraction		-	-	-	-	-	1.00	-	-	-
ethanol	kg/hr	24	0.0%	1	24	0.00%	-	-	24	0.0%
water	kg/hr	111,360	76.5%	10,548	121,909	0.00%	10,149	10,149	121,909	77.6%
glucose (ss)	kg/hr	1,064	0.7%	-	1,064	0.68%	-	-	11,891	7.6%
xylose (ss)	kg/hr	6,658	4.6%	-	6,658	0.00%	-	-	6,658	4.2%
arabinose (ss)	kg/hr	643	0.4%	-	643	0.00%	-	-	643	0.4%
other sugars (ss)	kg/hr	349	0.2%	-	349	0.00%	-	-	349	0.2%
cellobiose (ss)	kg/hr	134	0.1%	8	142	0.00%	-	-	142	0.1%
glucose oligomers (ss)	kg/hr	311	0.2%	38	349	0.00%	-	-	349	0.2%
xyolose oligomers (ss)	kg/hr	501	0.3%	31	532	0.00%	-	-	532	0.3%
other oligomers (ss)	kg/hr	-	0.0%	-	-	0.00%	-	-	-	0.0%
CSL (ss)	kg/hr	155	0.1%	129	284	0.00%	-	-	284	0.2%
(NH4)2SO4 (ss)	kg/hr	-	0.0%	-	-	0.00%	-	-	-	0.0%
NH4 acetate (ss)	kg/hr	-	0.0%	-	-	0.00%	-	-	-	0.0%
Others (soluble solids)	kg/hr	11	0.0%	1	12	0.00%	-	-	12	0.0%
Acetic Acid	kg/hr	295	0.2%	27	322	0.00%	-	-	322	0.2%
Sulfuric Acid	kg/hr	109	0.1%	7	115	0.00%	-	-	115	0.1%
Furfural	kg/hr	531	0.4%	22	553	0.00%	-	-	553	0.4%
HMF	kg/hr	37	0.0%	2	38	0.00%	-	-	38	0.0%
Carbon Dioxide	kg/hr	-	0.0%	-	-	0.00%	-	-	-	0.0%
Methane	kg/hr	-	0.0%	-	-	0.00%	-	-	-	0.0%
Oxygen	kg/hr	-	0.0%	-	-	0.00%	-	-	-	0.0%
Nitrogen	kg/hr	-	0.0%	0	0	0.00%	-	-	0	0.0%
Ammonia	kg/hr	1	0.0%	-	1	0.00%	-	-	1	0.0%
NH4 OH	kg/hr	-	0.0%	-	-	0.00%	-	-	-	0.0%
Others	kg/hr	404	0.3%	185	589	0.00%	-	-	589	0.4%
Cellulose (is)	kg/hr	13,533	9.3%	-	13,533	0.00%	-	-	2,707	1.7%
Xylan (is)	kg/hr	388	0.3%	15	403	0.00%	-	-	403	0.3%
Arabinan (is)	kg/hr	32	0.0%	1	34	0.00%	-	-	34	0.0%
Other Sugar Polymers (is)	kg/hr	18	0.0%	-	18	0.00%	-	-	18	0.0%
Cellulase (is)	kg/hr	26	0.0%	168	194	0.00%	-	-	194	0.1%
Biomass (is)	kg/hr	11	0.0%	68	78	0.00%	-	-	78	0.0%
Zymo. (is)	kg/hr	49	0.0%	9	58	0.00%	-	-	58	0.0%
Lignin (is)	kg/hr	6,021	4.1%	230	6,251	0.00%	-	-	6,251	4.0%
Gypsum (is)	kg/hr	3	0.0%	-	3	0.00%	-	-	3	0.0%
Ca(OH)2 (is)	kg/hr	-	0.0%	-	-	0.00%	-	-	-	0.0%
Others (is)	kg/hr	2,871	2.0%	110	2,981	0.00%	-	-	2,981	1.9%
*Average Density	g/ml	1.090	-	1.025	1.101	-	0.002	0.865	-	-

VER	DESCRIPTION	DATE
A	SUBCONTRACTOR UPDATE	10/99
		LL 2/23/99

NREL NATIONAL RENEWABLE ENERGY LABORATORY
Biotechnology Center For Fuels And Chemicals

SECTION A300
SHCF ENZYMATYC HYDROLYSIS

PFD-P100-A307 C

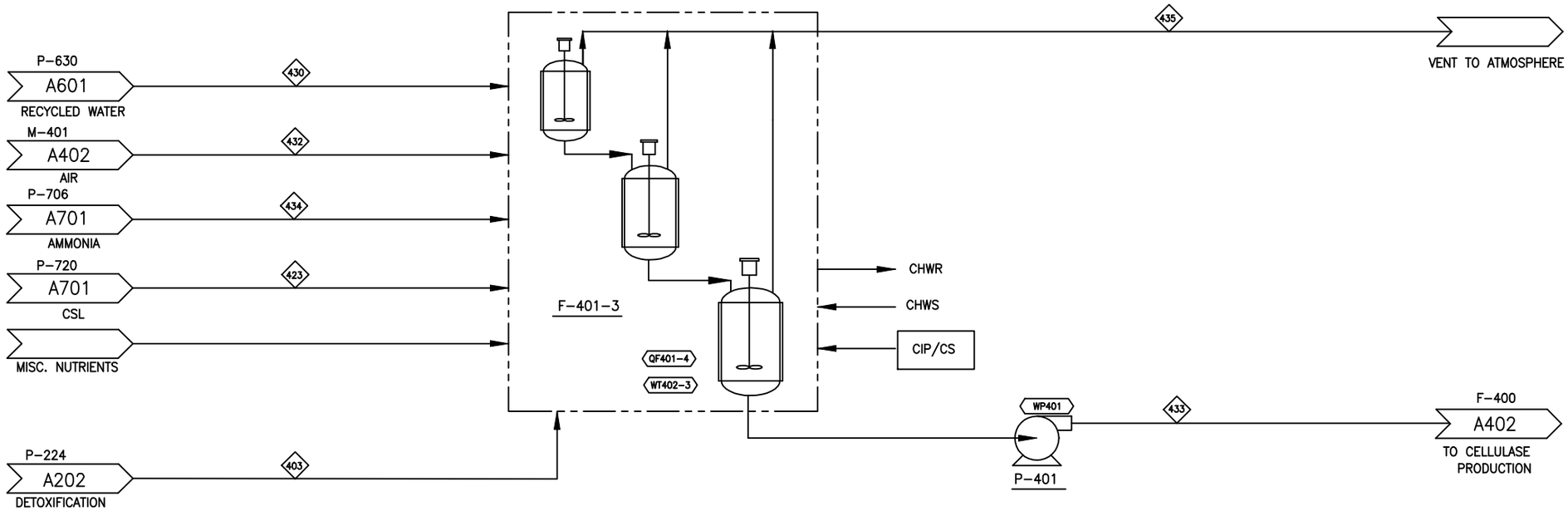

		403 pre-hydrolyzate from detox.	430 recycle water	432 air	434 ammonia	423 CSL	433 to cellulase production	435 vent air
Total flow	kg/hr	316	805	7,610	3	11	932	7,812
insoluble solids	%	15.6%	0.2%	0.0%	0.0%	0.0%	4.1%	0.0%
soluble solids	%	6.7%	1.0%	0.0%	0.0%	100.0%	1.8%	0.0%
temp.	°C	59	47	40	28	28	28	28
pressure	atm	100	100	100	100	100	100	100
vapor fraction		-	-	100	100	-	-	100
ethanol	kg/hr	-	-	-	-	-	-	-
water	kg/hr	242	783	-	-	-	866	182
glucose (ss)	kg/hr	2	-	-	-	-	-	-
xylose (ss)	kg/hr	15	1	-	-	-	-	-
arabinose (ss)	kg/hr	1	1	-	-	-	-	-
other sugars (ss)	kg/hr	1	1	-	-	-	-	-
cellobiose (ss)	kg/hr	0	0	-	-	-	1	-
glucose oligomers (ss)	kg/hr	1	3	-	-	-	3	-
xyolose oligomers (ss)	kg/hr	1	1	-	-	-	2	-
other oligomers (ss)	kg/hr	-	-	-	-	-	-	-
CSL (ss)	kg/hr	0	1	-	-	11	10	2
(NH4)2SO4 (ss)	kg/hr	-	-	-	-	-	-	-
NH4 acetate (ss)	kg/hr	-	-	-	-	-	-	-
Others (soluble solids)	kg/hr	-	-	-	-	-	-	-
Acetic Acid	kg/hr	1	2	-	-	-	2	0
Sulfuric Acid	kg/hr	0	0	-	-	-	0	-
Furfural	kg/hr	1	4	-	-	-	1	3
HMF	kg/hr	-	0	-	-	-	-	0
Carbon Dioxide	kg/hr	-	-	-	-	-	-	49
Methane	kg/hr	-	-	-	-	-	-	-
Oxygen	kg/hr	-	-	1,598	-	-	-	1,563
Nitrogen	kg/hr	-	-	6,011	-	-	-	6,011
Ammonia	kg/hr	-	-	-	3	-	-	-
NH4OH	kg/hr	-	-	-	-	-	-	-
Others	kg/hr	1	6	-	-	-	7	-
Cellulose (is)	kg/hr	29	-	-	-	-	-	-
Xylan (is)	kg/hr	1	-	-	-	-	1	-
Arabinan (is)	kg/hr	-	-	-	-	-	-	-
Other Sugar Polymers (is)	kg/hr	-	-	-	-	-	-	-
Cellulase (is)	kg/hr	-	0	-	-	-	0	-
Biomass (is)	kg/hr	-	-	-	-	-	17	-
Zymo. (is)	kg/hr	-	1	-	-	-	1	-
Lignin (is)	kg/hr	13	0	-	-	-	13	-
Gypsum (is)	kg/hr	-	-	-	-	-	-	-
Ca(OH)2 (is)	kg/hr	-	-	-	-	-	-	-
Others (is)	kg/hr	6	0	-	-	-	6	-
*Average Density	g/ml	1090	0.978	0.001	0.001	0.991	1020	0.001

VER	DESCRIPTION	DATE
A	SUBCONTRACTOR UPDATE	4/98
B	BASECASE UPDATE	9/98
C	DESIGN REPORT	2/99
		LL 2/23/99

NATIONAL RENEWABLE ENERGY LABORATORY
Biotechnology Center For Fuels And Chemicals

SECTION A400
CELLULASE SEED FERMENTATION

PFD-P100-A401 C

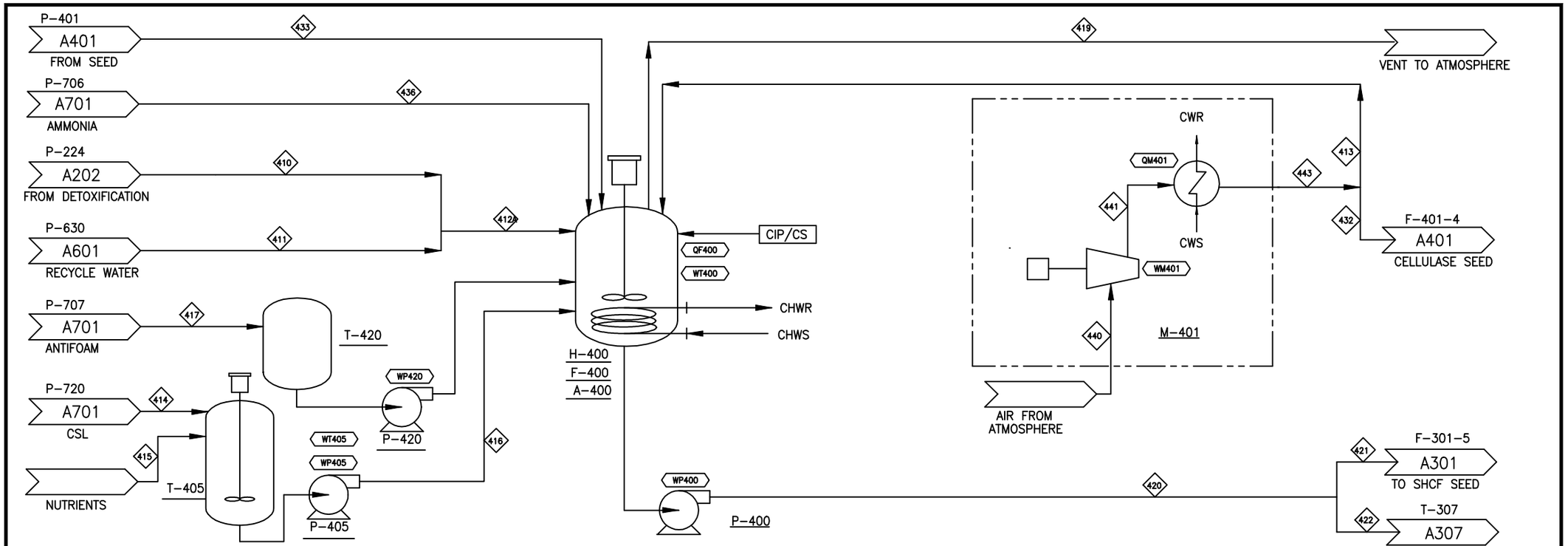

		410 pre-hydrolyzate	433 from cellulase seed pdctn	436 ammonia	411 recycle water	417 antifoam	414 CSL	415 nutrients	413 air	419 air vent	cellulase broth	broth after cellulase pdctn	421 to ferm seed pdctn	422 to enzymatic hydrolysis
Total flow	kg/hr	6,007	932	55	8,001	79	140	60	108,860	110,749	13,384	13,384	1,784	11,600
insoluble solids	%	15.8%	4.1%	0.0%	0.2%	0.0%	0.0%	0.0%	0.0%	0.0%	7.5%	5.2%	5.2%	5.2%
soluble solids	%	6.7%	1.8%	0.0%	10%	0.0%	100.0%	0.0%	0.0%	0.0%	4.7%	1.8%	1.8%	1.8%
temp.	°C	59	28	28	47	28	28	28	40	28	28	28	28	28
pressure	atm	1.00	1.00	1.00	1.00	1.00	1.00	1.00	1.00	1.66	1.66	1.66	1.66	1.66
vapor fraction		-	-	1.00	-	-	-	-	1.00	1.00	-	-	-	-
ethanol	kg/hr	1	-	-	1	-	-	-	-	2	0	1	-	1
water	kg/hr	4,597	866	-	7,777	-	-	-	-	1,537	11,703	12,172	1,623	10,548
glucose (ss)	kg/hr	44	-	-	-	-	-	-	-	-	44	-	-	-
xylose (ss)	kg/hr	275	-	-	8	-	-	-	-	-	283	-	-	-
arabinose (ss)	kg/hr	27	-	-	13	-	-	-	-	-	40	-	-	-
other sugars (ss)	kg/hr	15	-	-	7	-	-	-	-	-	22	-	-	-
cellobiose (ss)	kg/hr	5	1	-	4	-	-	-	-	-	10	10	1	8
glucose oligomers (ss)	kg/hr	13	3	-	28	-	-	-	-	-	44	44	6	38
xyolose oligomers (ss)	kg/hr	21	2	-	12	-	-	-	-	-	35	36	4	31
other oligomers (ss)	kg/hr	-	-	-	-	-	-	-	-	-	-	-	-	-
CSL (ss)	kg/hr	6	10	-	11	-	140	-	-	19	149	149	20	129
(NH4)2SO4 (ss)	kg/hr	-	-	-	-	-	-	-	-	-	-	-	-	-
NH4 acetate (ss)	kg/hr	-	-	-	-	-	-	-	-	-	-	-	-	-
Others (soluble solids)	kg/hr	0	-	-	0	-	-	-	-	-	1	1	-	1
Acetic Acid	kg/hr	12	2	-	19	-	-	-	-	3	31	31	4	27
Sulfuric Acid	kg/hr	4	0	-	3	-	-	-	-	-	7	7	1	7
Furfural	kg/hr	22	1	-	37	-	-	-	-	35	25	25	3	22
HMF	kg/hr	1	-	-	3	-	-	-	-	2	2	2	0	2
Carbon Dioxide	kg/hr	-	-	-	-	-	-	-	-	1,005	(1,005)	-	-	-
Methane	kg/hr	-	-	-	-	-	-	-	-	-	-	-	-	-
Oxygen	kg/hr	-	-	-	-	-	-	-	22,861	22,140	720	-	-	-
Nitrogen	kg/hr	-	-	-	-	-	-	-	85,999	85,999	0	0	-	0
Ammonia	kg/hr	-	-	50	1	-	-	-	-	-	51	-	-	-
NH4 OH	kg/hr	-	-	-	-	-	-	-	-	-	-	-	-	-
Others	kg/hr	17	7	4	58	79	-	60	-	7	218	213	28	185
Cellulose (is)	kg/hr	559	-	-	1	-	-	-	-	-	560	-	-	-
Xylan (is)	kg/hr	16	1	-	0	-	-	-	-	-	17	17	2	15
Arabinan (is)	kg/hr	1	-	-	-	-	-	-	-	-	1	1	-	1
Other Sugar Polymers (is)	kg/hr	1	-	-	-	-	-	-	-	-	1	-	-	-
Cellulase (is)	kg/hr	1	0	-	4	-	-	-	-	-	5	194	26	168
Biomass (is)	kg/hr	0	17	-	2	-	-	-	-	-	19	78	10	68
Zymo. (is)	kg/hr	2	1	-	7	-	-	-	-	-	10	10	1	9
Lignin (is)	kg/hr	248	13	-	4	-	-	-	-	-	266	266	36	230
Gypsum (is)	kg/hr	-	-	-	-	-	-	-	-	-	-	-	-	-
Ca(OH)2 (is)	kg/hr	-	-	-	-	-	-	-	-	-	-	-	-	-
Others (is)	kg/hr	118	6	-	2	-	-	-	-	-	127	127	17	110
Average Density	g/ml	1.090	1.020	0.001	0.978	0.888	0.991	0.991	0.001	0.002	-	-	1.025	1.025

VER	DESCRIPTION	DATE
A	SUBCONTRACTOR UPDATE	4/98
B	BASECASE UPDATE	9/98
C	DESIGN REPORT	2/99
		LL 2/23/99

NREL NATIONAL RENEWABLE ENERGY LABORATORY
Biotechnology Center For Fuels And Chemicals

SECTION A400
CELLULASE PROD. FERMENTATION

PFD-P100-A402 C

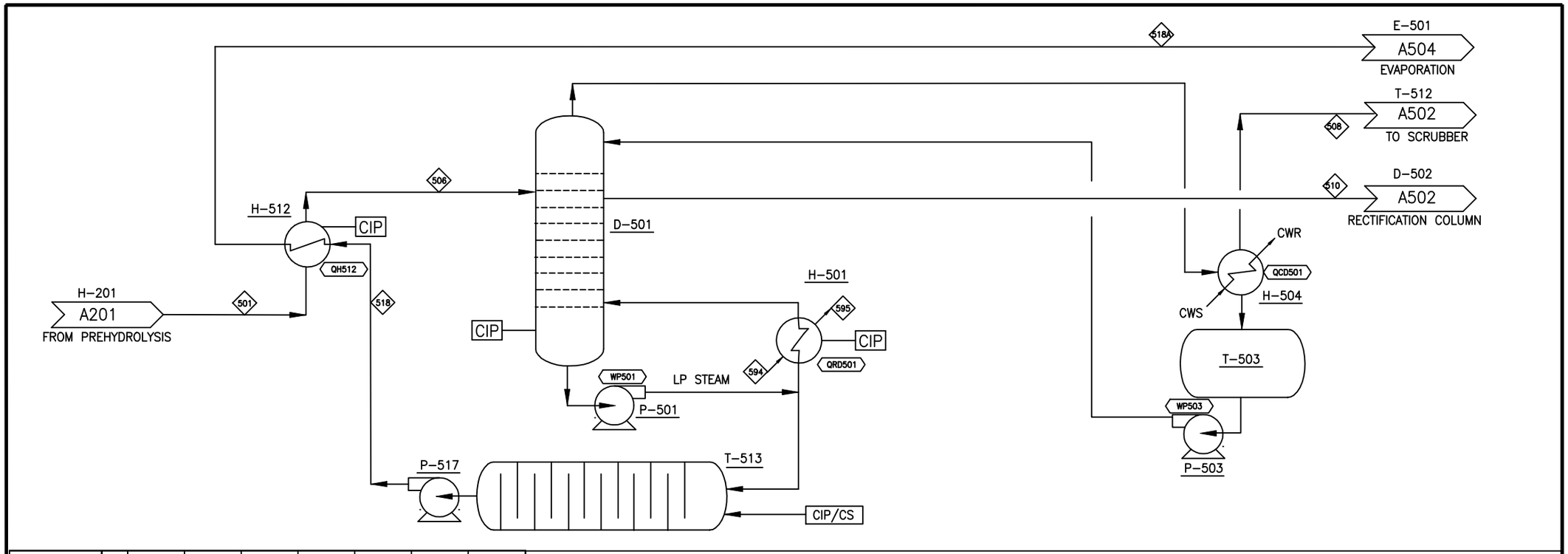

		501beer	506 heated beer	508 to scrubber	510 to rectification	518 bottoms	594 steam	595 condensate
Total flow	kg/hr	173,737	173,737	267	23,576	149,897	25,190	25,190
insoluble solids	%	8.0%	8.0%	0.0%	0.0%	9.3%	0.0%	0.0%
soluble solids	%	3.5%	3.5%	0.0%	0.4%	3.9%	0.0%	0.0%
temp.	°C	95	100	60	113	122	170	148
pressure	atm	4.00	4.76	1.86	1.93	2.10	4.42	4.42
vapor fraction		-	-	1.00	1.00	-	1.00	-
ethanol	kg/hr	9,265	9,265	33	9,164	68	-	-
water	kg/hr	139,868	139,868	11	13,909	125,948	25,190	25,190
glucose (ss)	kg/hr	135	135	-	-	135	-	-
xylose (ss)	kg/hr	1,683	1,683	-	-	1,683	-	-
arabinose (ss)	kg/hr	663	663	-	-	663	-	-
other sugars (ss)	kg/hr	360	360	-	-	360	-	-
cellobiose (ss)	kg/hr	183	183	-	-	183	-	-
glucose oligomers (ss)	kg/hr	1,351	1,351	-	-	1,351	-	-
xyolose oligomers (ss)	kg/hr	592	592	-	-	592	-	-
other oligomers (ss)	kg/hr	-	-	-	-	-	-	-
CSL (ss)	kg/hr	1,029	1,029	-	103	926	-	-
(NH4)2SO4 (ss)	kg/hr	-	-	-	-	-	-	-
NH4 acetate (ss)	kg/hr	-	-	-	-	-	-	-
Others (soluble solids)	kg/hr	13	13	-	-	13	-	-
Acetic Acid	kg/hr	806	806	-	40	766	-	-
Sulfuric Acid	kg/hr	128	128	-	-	128	-	-
Furfural	kg/hr	614	614	0	322	291	-	-
HMF	kg/hr	42	42	-	22	20	-	-
Carbon Dioxide	kg/hr	223	223	223	-	-	-	-
Methane	kg/hr	-	-	-	-	-	-	-
Oxygen	kg/hr	1	1	-	-	-	-	-
Nitrogen	kg/hr	-	-	-	-	-	-	-
Ammonia	kg/hr	6	6	-	6	-	-	-
NH4 OH	kg/hr	-	-	-	-	-	-	-
Others	kg/hr	2,823	2,823	-	10	2,813	-	-
Cellulose (is)	kg/hr	2,355	2,355	-	-	2,355	-	-
Xylan (is)	kg/hr	447	447	-	-	447	-	-
Arabinan (is)	kg/hr	37	37	-	-	37	-	-
Other Sugar Polymers (is)	kg/hr	20	20	-	-	20	-	-
Cellulase (is)	kg/hr	223	223	-	-	223	-	-
Biomass (is)	kg/hr	90	90	-	-	90	-	-
Zymo. (is)	kg/hr	523	523	-	-	523	-	-
Lignin (is)	kg/hr	6,946	6,946	-	-	6,946	-	-
Gypsum (is)	kg/hr	4	4	-	-	4	-	-
Ca(OH)2 (is)	kg/hr	-	-	-	-	-	-	-
Others (is)	kg/hr	3,312	3,312	-	-	3,312	-	-
*Average Density	g/ml	0.965	0.972	0.003	0.001	0.974	0.002	0.865

VER	DESCRIPTION	DATE
A	SUBCONTRACTOR UPDATE	4/98
B	BASECASE UPDATE	9/98
C	DESIGN REPORT	2/99
		LL 2/23/99

NATIONAL RENEWABLE ENERGY LABORATORY
Biotechnology Center For Fuels And Chemicals

SECTION A500
BEER DISTILLATION AND KILL

PFD-P100-A501 C

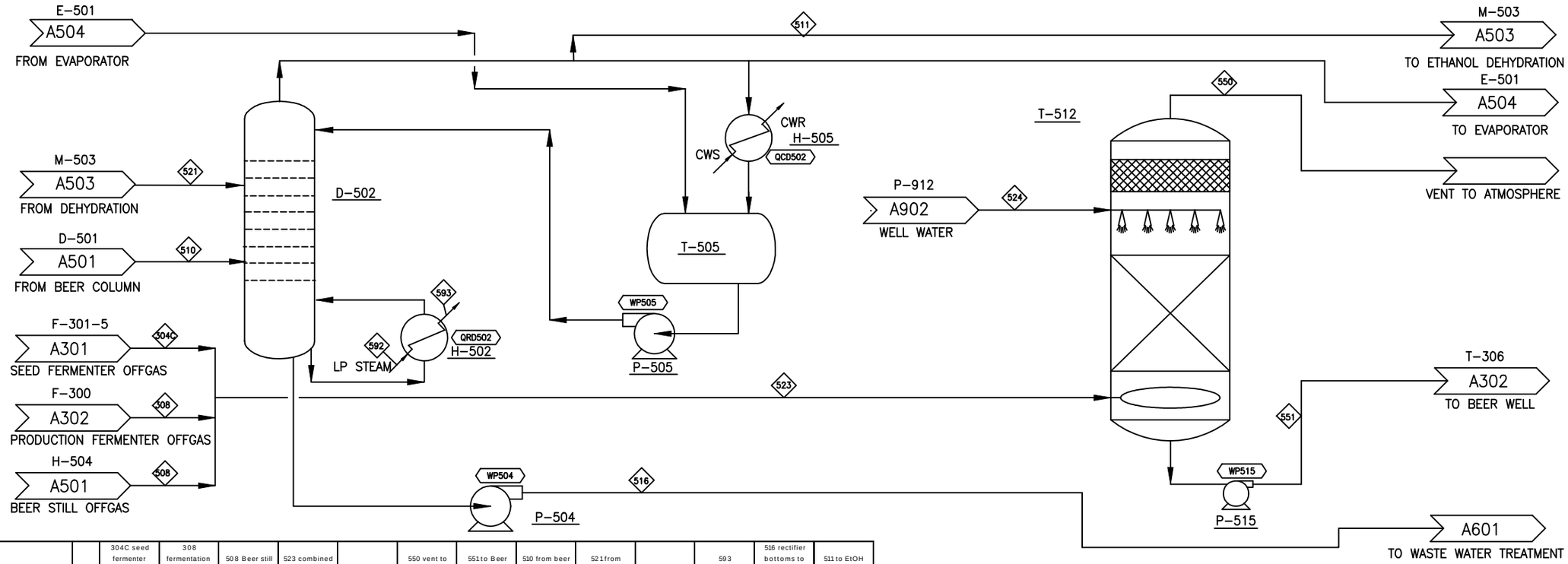

		304C seed fermenter offgas	308 fermentation offgas	508 Beer still offgas	523 combined offgases	524 well water	550 vent to atm	551 to Beer Well	510 from beer column	521 from dehydration	592 LP steam	593 condensate	516 rectifier bottoms to WW treatment	511 to EtOH dehydration
Total flow	kg/hr	466	8,264	267	8,998	6,564	8,734	6,827	23,576	3,168	3,230	3,230	14,425	12,320
insoluble solids	%	0.0%	0.0%	0.0%	0.0%	0.0%	0.0%	0.0%	0.0%	0.0%	0.0%	0.0%	0.0%	0.0%
soluble solids	%	0.0%	0.0%	0.0%	0.0%	0.0%	0.0%	0.0%	0.4%	0.0%	0.0%	0.0%	0.7%	0.0%
temp.	°C	30	30	60	31	13	18	30	113	70	170	148	121	92
pressure	atm	1.00	1.00	1.86	1.00	1.00	0.90	0.90	1.93	1.53	4.42	4.42	2.07	1.70
vapor fraction		1.00	1.00	1.00	1.00	-	1.00	-	1.00	-	1.00	-	-	1.00
ethanol	kg/hr	4	139	33	177	-	2	175	9,164	2,289	-	-	7	11,395
water	kg/hr	8	141	11	160	6,564	83	6,640	13,909	879	3,230	3,230	13,919	924
glucose (ss)	kg/hr	-	-	-	-	-	-	-	-	-	-	-	-	-
xylose (ss)	kg/hr	-	-	-	-	-	-	-	-	-	-	-	-	-
arabinose (ss)	kg/hr	-	-	-	-	-	-	-	-	-	-	-	-	-
other sugars (ss)	kg/hr	-	-	-	-	-	-	-	-	-	-	-	-	-
cellobiose (ss)	kg/hr	-	-	-	-	-	-	-	-	-	-	-	-	-
glucose oligomers (ss)	kg/hr	-	-	-	-	-	-	-	-	-	-	-	-	-
xyolose oligomers (ss)	kg/hr	-	-	-	-	-	-	-	-	-	-	-	-	-
other oligomers (ss)	kg/hr	-	-	-	-	-	-	-	-	-	-	-	-	-
CSL (ss)	kg/hr	-	1	-	1	-	-	1	103	-	-	-	106	-
(NH4)2SO4 (ss)	kg/hr	-	-	-	-	-	-	-	-	-	-	-	-	-
NH4 acetate (ss)	kg/hr	-	-	-	-	-	-	-	-	-	-	-	-	-
Others (soluble solids)	kg/hr	-	-	-	-	-	-	-	-	-	-	-	-	-
Acetic Acid	kg/hr	-	0	-	0	-	-	0	40	-	-	-	40	-
Sulfuric Acid	kg/hr	-	-	-	-	-	-	-	-	-	-	-	-	-
Furfural	kg/hr	0	4	0	4	-	-	4	322	-	-	-	316	-
HMF	kg/hr	-	0	-	0	-	-	0	22	-	-	-	22	-
Carbon Dioxide	kg/hr	445	7,910	223	8,577	-	8,575	8	-	-	-	-	-	-
Methane	kg/hr	-	-	-	-	-	-	-	-	-	-	-	-	-
Oxygen	kg/hr	9	67	-	76	-	75	1	-	-	-	-	-	-
Nitrogen	kg/hr	-	0	-	0	-	0	-	-	-	-	-	-	-
Ammonia	kg/hr	-	-	-	-	-	-	-	6	-	-	-	6	-
NH4 OH	kg/hr	-	-	-	-	-	-	-	-	-	-	-	-	-
Others	kg/hr	-	-	-	-	-	-	-	10	-	-	-	10	-
Cellulose (is)	kg/hr	-	-	-	-	-	-	-	-	-	-	-	-	-
Xylan (is)	kg/hr	-	-	-	-	-	-	-	-	-	-	-	-	-
Arabinan (is)	kg/hr	-	-	-	-	-	-	-	-	-	-	-	-	-
Other Sugar Polymers (is)	kg/hr	-	-	-	-	-	-	-	-	-	-	-	-	-
Cellulase (is)	kg/hr	-	-	-	-	-	-	-	-	-	-	-	-	-
Biomass (is)	kg/hr	-	-	-	-	-	-	-	-	-	-	-	-	-
Zymo. (is)	kg/hr	-	-	-	-	-	-	-	-	-	-	-	-	-
Lignin (is)	kg/hr	-	-	-	-	-	-	-	-	-	-	-	-	-
Gypsum (is)	kg/hr	-	-	-	-	-	-	-	-	-	-	-	-	-
Ca(OH)2 (is)	kg/hr	-	-	-	-	-	-	-	-	-	-	-	-	-
Others (is)	kg/hr	-	-	-	-	-	-	-	-	-	-	-	-	-
*Average Density	g/ml	0.002	0.002	0.003	0.002	1.005	0.002	0.983	0.001	0.780	0.002	0.865	0.899	0.002

VER	DESCRIPTION	DATE
A	SUBCONTRACTOR UPDATE	4/98
B	BASECASE UPDATE	9/98
C	DESIGN REPORT	2/99
		LL 2/24/99

NREL NATIONAL RENEWABLE ENERGY LABORATORY
Biotechnology Center For Fuels And Chemicals

SECTION A500
RECTIFICATION DISTILLATION

PFD-P100-A502 C

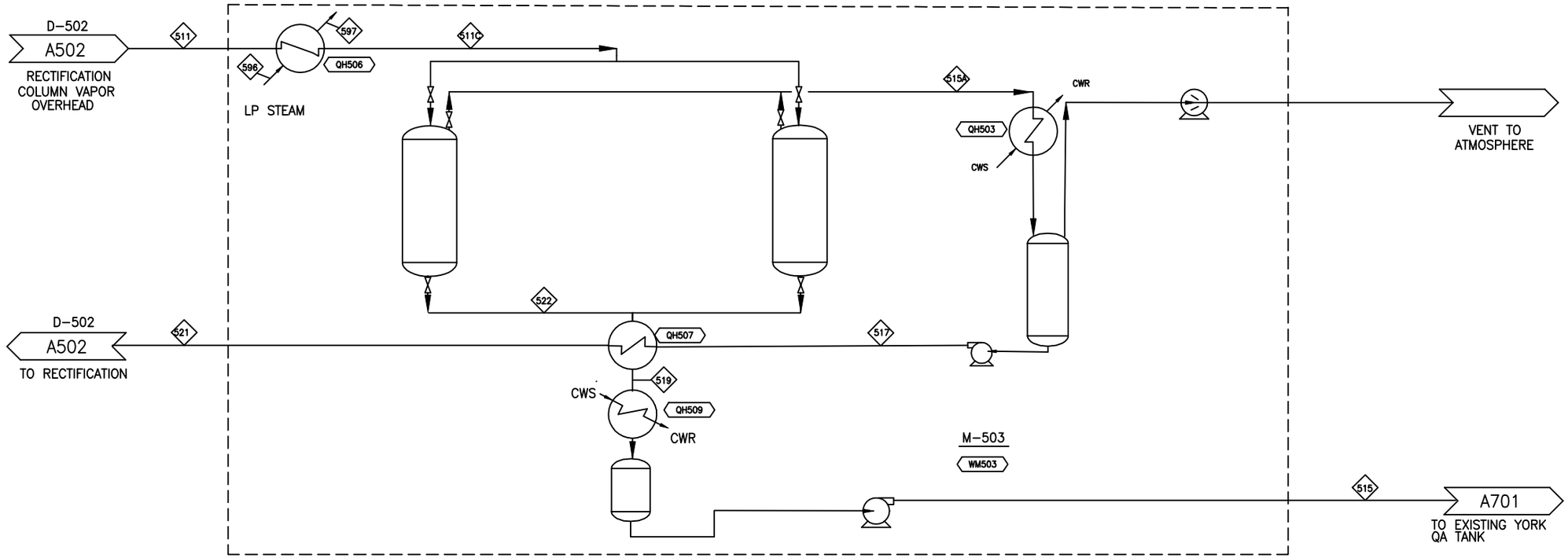

		511 rectification vapor	511c heated rectification vapor	515 EtOH liquid product	515A dehy. regeneration	517 cooled recirc. to rectification	519 ethanol vapor product	521 reheated recirc. To rectification	522 swing for regeneration and product	596 LP steam (pre-heat)	597 steam condensate
Total flow	kg/hr	12,320	12,320	9,151	3,168	3,168	9,151	3,168	3,168	229	229
insoluble solids	%	0.0%	0.0%	0.0%	0.0%	0.0%	0.0%	0.0%	0.0%	0.0%	0.0%
soluble solids	%	0.0%	0.0%	0.0%	0.0%	0.0%	0.0%	0.0%	0.0%	0.0%	0.0%
temp.	°C	92	116	38	116	35	92	70	70	170	148
pressure	atm	1.70	1.70	1.00	1.70	0.14	1.44	1.53	1.53	4.42	4.42
vapor fraction		1.00	1.00		1.00	-	1.00	-	-	1.00	-
ethanol	kg/hr	11,395	11,395	9,106	2,289	2,289	9,106	2,289	2,289	-	-
water	kg/hr	924	924	45	879	879	45	879	879	229	229
glucose (ss)	kg/hr	-	-	-	-	-	-	-	-	-	-
xylose (ss)	kg/hr	-	-	-	-	-	-	-	-	-	-
arabinose (ss)	kg/hr	-	-	-	-	-	-	-	-	-	-
other sugars (ss)	kg/hr	-	-	-	-	-	-	-	-	-	-
cellobiose (ss)	kg/hr	-	-	-	-	-	-	-	-	-	-
glucose oligomers (ss)	kg/hr	-	-	-	-	-	-	-	-	-	-
xyolose oligomers (ss)	kg/hr	-	-	-	-	-	-	-	-	-	-
other oligomers (ss)	kg/hr	-	-	-	-	-	-	-	-	-	-
CSL (ss)	kg/hr	-	-	-	-	-	-	-	-	-	-
(NH4)2SO4 (ss)	kg/hr	-	-	-	-	-	-	-	-	-	-
NH4 acetate (ss)	kg/hr	-	-	-	-	-	-	-	-	-	-
Others (soluble solids)	kg/hr	-	-	-	-	-	-	-	-	-	-
Acetic Acid	kg/hr	-	-	-	-	-	-	-	-	-	-
Sulfuric Acid	kg/hr	-	-	-	-	-	-	-	-	-	-
Furfural	kg/hr	-	-	-	-	-	-	-	-	-	-
HMF	kg/hr	-	-	-	-	-	-	-	-	-	-
Carbon Dioxide	kg/hr	-	-	-	-	-	-	-	-	-	-
Methane	kg/hr	-	-	-	-	-	-	-	-	-	-
Oxygen	kg/hr	-	-	-	-	-	-	-	-	-	-
Nitrogen	kg/hr	-	-	-	-	-	-	-	-	-	-
Ammonia	kg/hr	-	-	-	-	-	-	-	-	-	-
NH4OH	kg/hr	-	-	-	-	-	-	-	-	-	-
Others	kg/hr	-	-	-	-	-	-	-	-	-	-
Cellulose (is)	kg/hr	-	-	-	-	-	-	-	-	-	-
Xylan (is)	kg/hr	-	-	-	-	-	-	-	-	-	-
Arabinan (is)	kg/hr	-	-	-	-	-	-	-	-	-	-
Other Sugar Polymers (is)	kg/hr	-	-	-	-	-	-	-	-	-	-
Cellulase (is)	kg/hr	-	-	-	-	-	-	-	-	-	-
Biomass (is)	kg/hr	-	-	-	-	-	-	-	-	-	-
Zymo. (is)	kg/hr	-	-	-	-	-	-	-	-	-	-
Lignin (is)	kg/hr	-	-	-	-	-	-	-	-	-	-
Gypsum (is)	kg/hr	-	-	-	-	-	-	-	-	-	-
Ca(OH)2 (is)	kg/hr	-	-	-	-	-	-	-	-	-	-
Others (is)	kg/hr	-	-	-	-	-	-	-	-	-	-
Average Density	g/ml	0.002	0.002	0.757	0.002	0.821	0.002	0.780	0.780	0.002	0.865

VER	DESCRIPTION	DATE
A	SUBCONTRACTOR UPDATE	4/98
B	BASECASE UPDATE	9/98
C	DESIGN REPORT	2/99
		LL 2/24/99

NATIONAL RENEWABLE ENERGY LABORATORY
Biotechnology Center For Fuels And Chemicals

SECTION A500
ETHANOL DEHYDRATION

PFD-P100-A503 C

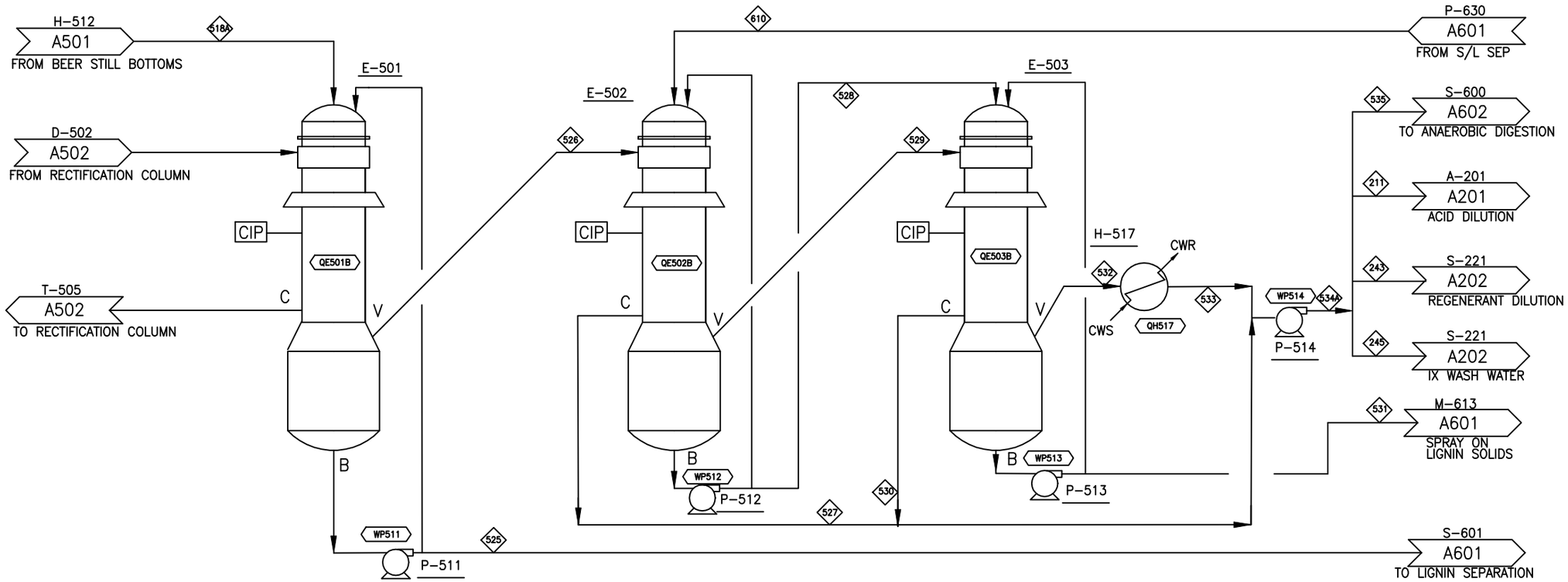

		211 evap. cond. to acid dilution	243 evap. cond. to IX regen.	245 evap. cond. to IX regen.	518A beer stripper bottoms	525 1st evap. bottoms (lignin)	526 vapor to 2nd evap.	527 2nd evap. cond.	528 2nd evap. bottoms	529 vapor to 3rd evap.	530 3rd evap. water for recycle	531 lignin evap. syrup	532 3rd evap. vapor to recycle water	533 evap. cond.	534A evap. cond.	535 to WWT	610 from lignin sep.
Total flow	kg/hr	23,045	17,799	13,800	149,897	125,526	24,371	24,371	42,642	20,448	20,448	22,372	20,271	20,271	65,090	6,509	63,817
insoluble solids	%	0.0%	0.0%	0.0%	9.3%	10.6%	0.0%	0.0%	13%	0.0%	0.0%	2.4%	0.0%	0.0%	0.0%	0.0%	0.8%
soluble solids	%	30.0%	0.0%	0.3%	3.9%	3.5%	0.7%	0.7%	4.7%	0.0%	0.0%	8.9%	0.0%	0.0%	0.3%	0.3%	3.2%
temp.	°C	73	73	73	122	86	86	86	69	69	69	62	62	62	73	73	40
pressure	atm	3.00	3.00	3.00	2.10	0.58	0.58	0.60	0.29	0.29	0.30	0.21	0.21	0.22	2.00	2.00	3.20
vapor fraction		-	-	-	-	-	100	-	-	100	-	-	100	-	-	-	-
ethanol	kg/hr	21	-	13	68	19	50	50	1	1	9	-	1	1	60	6	11
water	kg/hr	22,816	17,799	13,663	125,948	103,980	23,905	23,905	38,070	20,356	20,347	17,879	20,192	20,192	64,444	6,444	59,091
glucose (ss)	kg/hr	-	-	-	135	104	-	-	-	-	-	-	-	-	-	-	-
xylose (ss)	kg/hr	-	-	-	1,683	403	-	-	226	-	-	226	-	-	-	-	229
arabinose (ss)	kg/hr	-	-	-	663	647	-	-	363	-	-	363	-	-	-	-	368
other sugars (ss)	kg/hr	-	-	-	360	351	-	-	198	-	-	198	-	-	-	-	199
cellobiose (ss)	kg/hr	-	-	-	183	182	-	-	102	-	-	102	-	-	-	-	103
glucose oligomers (ss)	kg/hr	-	-	-	1,351	1,371	-	-	770	-	-	770	-	-	-	-	779
xyolose oligomers (ss)	kg/hr	-	-	-	592	589	-	-	331	-	-	331	-	-	-	-	334
other oligomers (ss)	kg/hr	-	-	-	-	-	-	-	-	-	-	-	-	-	-	-	-
CSL (ss)	kg/hr	64	-	38	926	783	180	180	-	-	-	-	-	-	180	18	-
(NH4)2SO4 (ss)	kg/hr	-	-	-	-	-	-	-	-	-	-	-	-	-	-	-	-
NH4 acetate (ss)	kg/hr	-	-	-	-	-	-	-	-	-	-	-	-	-	-	-	-
Others (soluble solids)	kg/hr	-	-	-	13	13	-	-	5	-	-	5	-	-	-	-	5
Acetic Acid	kg/hr	48	-	28	766	735	34	34	376	37	37	313	63	63	134	13	418
Sulfuric Acid	kg/hr	-	-	-	128	128	-	-	72	-	-	72	-	-	-	-	73
Furfural	kg/hr	84	-	50	291	113	175	175	14	50	50	2	12	12	237	24	64
HMF	kg/hr	6	-	4	20	8	12	12	1	4	4	-	1	1	16	2	5
Carbon Dioxide	kg/hr	-	-	-	-	-	-	-	-	-	-	-	-	-	-	-	-
Methane	kg/hr	-	-	-	-	-	-	-	-	-	-	-	-	-	-	-	-
Oxygen	kg/hr	-	-	-	-	-	-	-	-	-	-	-	-	-	-	-	-
Nitrogen	kg/hr	-	-	-	-	-	-	-	-	-	-	-	-	-	-	-	-
Ammonia	kg/hr	-	-	-	-	-	-	-	-	-	-	-	-	-	-	-	-
NH4 OH	kg/hr	-	-	-	-	-	-	-	-	-	-	-	-	-	-	-	-
Others	kg/hr	6	-	4	2,813	2,803	16	16	1,579	1	1	1,577	1	1	18	2	1,598
Cellulose (is)	kg/hr	-	-	-	2,355	1,723	-	-	26	-	-	26	-	-	-	-	26
Xylan (is)	kg/hr	-	-	-	447	442	-	-	7	-	-	7	-	-	-	-	7
Arabinan (is)	kg/hr	-	-	-	37	37	-	-	0	-	-	0	-	-	-	-	0
Other Sugar Polymers (is)	kg/hr	-	-	-	20	20	-	-	0	-	-	0	-	-	-	-	0
Cellulase (is)	kg/hr	-	-	-	223	284	-	-	106	-	-	106	-	-	-	-	108
Biomass (is)	kg/hr	-	-	-	90	114	-	-	43	-	-	43	-	-	-	-	43
Zymo. (is)	kg/hr	-	-	-	523	532	-	-	199	-	-	199	-	-	-	-	201
Lignin (is)	kg/hr	-	-	-	6,946	6,868	-	-	103	-	-	103	-	-	-	-	104
Gypsum (is)	kg/hr	-	-	-	4	4	-	-	-	-	-	-	-	-	-	-	-
Ca(OH)2 (is)	kg/hr	-	-	-	-	-	-	-	-	-	-	-	-	-	-	-	-
Others (is)	kg/hr	-	-	-	3,312	3,275	-	-	49	-	-	49	-	-	-	-	50
Average Density	g/ml	0.946	0.945	0.946	0.974	1025	-	0.934	0.978	-	0.950	1011	-	0.957	0.946	0.946	0.998

VER	DESCRIPTION	DATE
A	SUBCONTRACTOR UPDATE	4/98
B	BASECASE UPDATE	9/98
C	DESIGN REPORT	2/99

LL 2/24/99

NATIONAL RENEWABLE ENERGY LABORATORY
Biotechnology Center For Fuels And Chemicals

SECTION A500
EVAPORATOR

PFD-P100-A504 C

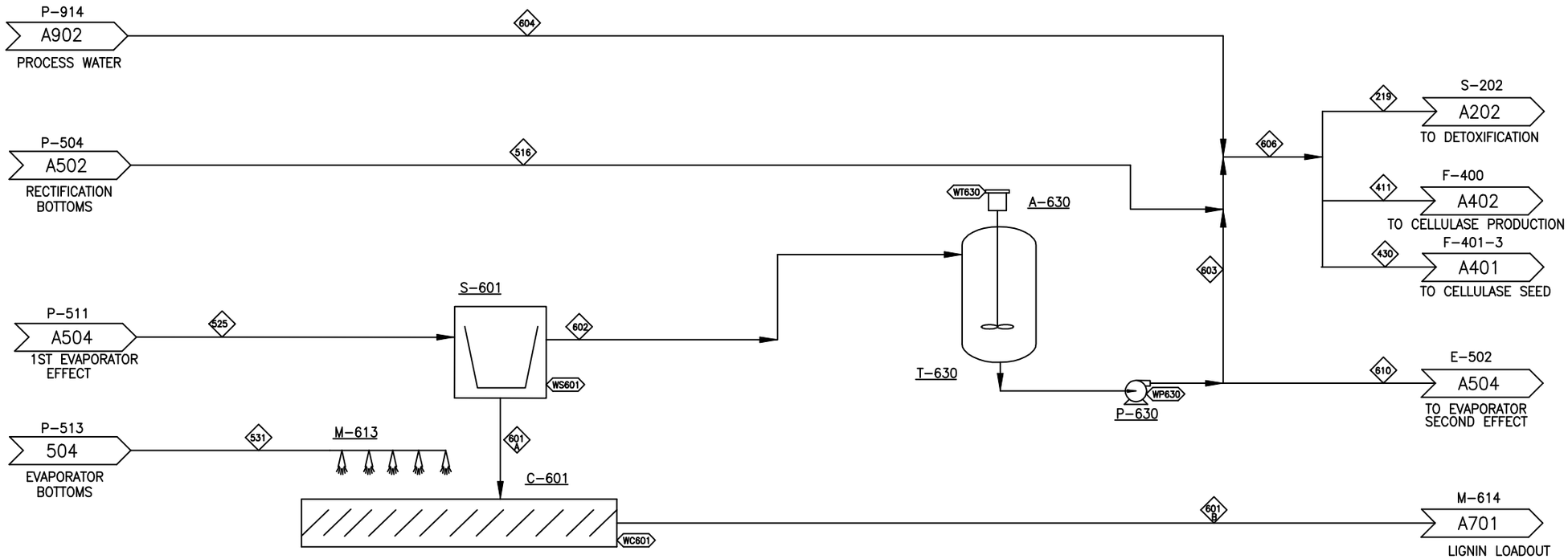

		219 to detox.	411 to cellulase pdctn	430 to cellulase seed pdctn	516 rectification bottoms	525 1st evap. effect	601A lignin solids	531 lignin evap. syrup	601B lignin and syrup to rail loadout	602 to recycle hold tank	603 to recycle water	604 process water	recycle, rect. bottoms recycle water	610 to evap. 2nd effect
Total flow	kg/hr	62,845	8,001	805	14,425	125,526	41,406	22,372	63,778	84,120	20,302	36,924	71,651	63,817
insoluble solids	%	0.2%	0.2%	0.2%	0.0%	10.6%	30.4%	2.4%	20.6%	0.8%	0.8%	0.0%	0.2%	0.8%
soluble solids	%	1.0%	1.0%	1.0%	0.7%	3.5%	4.3%	8.9%	5.9%	3.2%	3.2%	0.0%	1.0%	3.2%
temp.	°C	47	47	47	121	86	40	62	~48	40	40	20	47	40
pressure	atm	1.00	1.00	1.00	2.07	0.58	3.20	0.21	-	3.20	3.20	1.00	1.00	3.20
vapor fraction		-	-	-	-	-	-	-	-	-	-	-	-	-
ethanol	kg/hr	9	1	-	7	19	4	-	4	14	3	-	10	11
water	kg/hr	61,082	7,777	783	13,919	103,980	26,090	17,879	43,969	77,890	18,799	36,924	69,642	59,091
glucose (ss)	kg/hr	-	-	-	-	104	104	-	104	-	-	-	-	-
xylose (ss)	kg/hr	64	8	1	-	403	101	226	327	302	73	-	73	229
arabinose (ss)	kg/hr	104	13	1	-	647	162	363	526	485	117	-	118	368
other sugars (ss)	kg/hr	56	7	1	-	351	88	198	286	263	63	-	64	199
cellobiose (ss)	kg/hr	29	4	0	-	182	46	102	148	136	33	-	33	103
glucose oligomers (ss)	kg/hr	219	28	3	-	1,371	344	770	1,114	1,027	248	-	249	779
xyolose oligomers (ss)	kg/hr	94	12	1	-	589	148	331	478	441	106	-	107	334
other oligomers (ss)	kg/hr	-	-	-	-	-	-	-	-	-	-	-	-	-
CSL (ss)	kg/hr	91	11	1	106	783	783	-	783	-	-	-	104	-
(NH4)2SO4 (ss)	kg/hr	-	-	-	-	-	-	-	-	-	-	-	-	-
NH4 acetate (ss)	kg/hr	-	-	-	-	-	-	-	-	-	-	-	-	-
Others (soluble solids)	kg/hr	1	0	-	-	13	6	5	11	7	2	-	2	5
Acetic Acid	kg/hr	152	19	2	40	735	185	313	498	551	133	-	173	418
Sulfuric Acid	kg/hr	20	3	0	-	128	32	72	104	96	23	-	23	73
Furfural	kg/hr	290	37	4	316	113	28	2	30	85	21	-	331	64
HMF	kg/hr	20	3	0	22	8	2	-	2	6	2	-	23	5
Carbon Dioxide	kg/hr	-	-	-	-	-	-	-	-	-	-	-	-	-
Methane	kg/hr	-	-	-	-	-	-	-	-	-	-	-	-	-
Oxygen	kg/hr	-	-	-	-	-	-	-	-	-	-	-	-	-
Nitrogen	kg/hr	-	-	-	-	-	-	-	-	-	-	-	-	-
Ammonia	kg/hr	5	1	-	6	-	-	-	-	-	-	-	6	-
NH4 OH	kg/hr	-	-	-	-	-	-	-	-	-	-	-	-	-
Others	kg/hr	457	58	6	10	2,803	697	1,577	2,274	2,106	508	-	521	1,598
Cellulose (is)	kg/hr	7	1	-	-	1,723	1,688	26	1,714	35	8	-	8	26
Xylan (is)	kg/hr	2	0	-	-	442	433	7	440	9	2	-	2	7
Arabinan (is)	kg/hr	-	-	-	-	37	36	0	37	0	0	-	-	0
Other Sugar Polymers (is)	kg/hr	-	-	-	-	20	19	0	20	0	0	-	-	0
Cellulase (is)	kg/hr	30	4	0	-	284	142	106	248	142	34	-	34	108
Biomass (is)	kg/hr	12	2	-	-	114	57	43	100	57	14	-	14	43
Zymo. (is)	kg/hr	57	7	1	-	532	266	199	465	266	64	-	64	201
Lignin (is)	kg/hr	29	4	0	-	6,868	6,731	103	6,834	137	33	-	33	104
Gypsum (is)	kg/hr	-	-	-	-	4	4	-	4	-	-	-	-	-
Ca(OH)2 (is)	kg/hr	-	-	-	-	-	-	-	-	-	-	-	-	-
Others (is)	kg/hr	14	2	0	-	3,275	3,209	49	3,258	66	16	-	16	50
*Average Density	g/ml	0.978	0.978	0.978	0.899	1.025	1.206	1.011	~1.150	0.998	0.998	0.998	0.978	0.998

VER	DESCRIPTION	DATE
A	SUBCONTRACTOR UPDATE	4/98
B	BASECASE UPDATE	9/98
C	WWT UPDATE	11/98
D	DESIGN REPORT	2/99
		LL 2/24/99

NATIONAL RENEWABLE ENERGY LABORATORY
Biotechnology Center For Fuels And Chemicals

SECTION A600
LIGNIN SEPARATION & RECYCLE

PFD-P100-A601 D

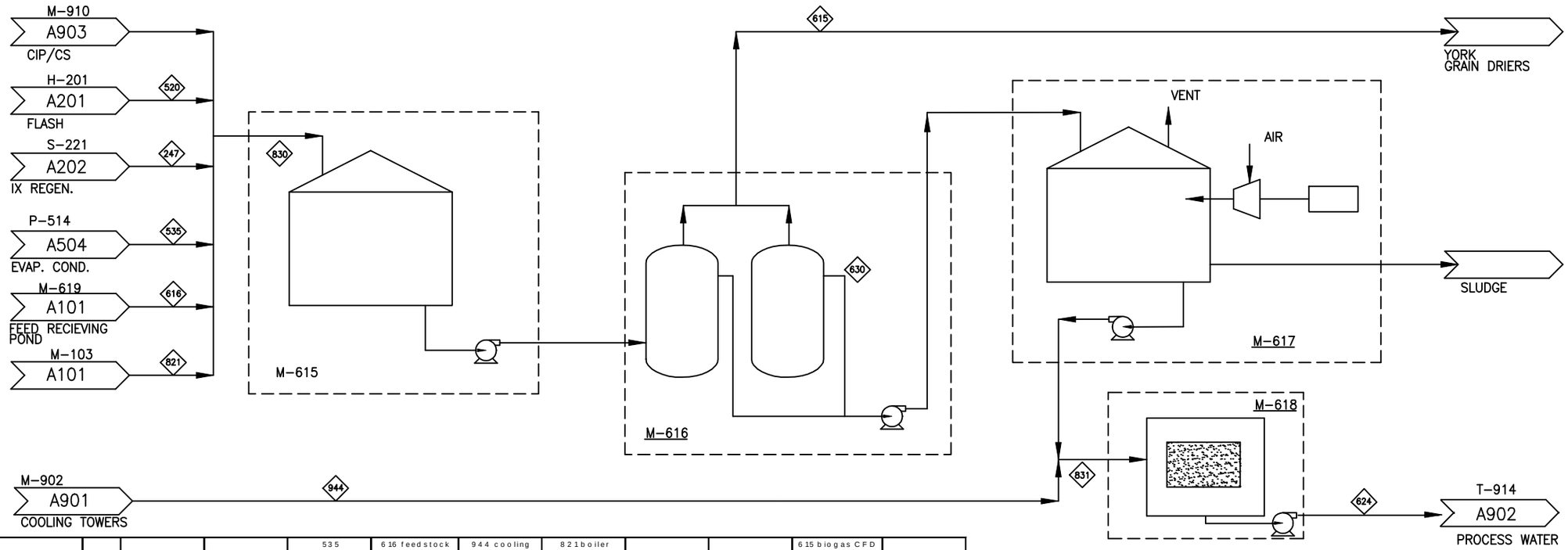

		520 flash to WW treatment	247 IX to WW treatment	535 evaporator WW	616 feedstock receiving pad run-off	944 cooling tower to WWT (filters only)	821 boiler blowdown to WWT	830 Total WW	831 Total WW to filter	615 biogas CFD @ 85% methane to WDG driers	624 Recycle Water
Total flow	kg/hr	20,021	29,632	6,509	39,407	6,842	2,699	98,267	103,217	442,114	64,081
insoluble solids	%	0.0%	0.0%	0.0%	0.0%	0.0%	0.0%	0.0%	0.0%	x	0.0%
soluble solids	%	0.1%	4.1%	0.3%	0.0%	0.0%	0.0%	1.3%	0.0%	4.2%	0.4%
temp.	°C	99	40	73	-	28	321	-	-	18,688	21
pressure	atm	1.00	3.00	2.00	-	1.00	112.62	-	-	/	1.00
vapor fraction		1.00	-	-	-	-	-	-	-	2.20	-
ethanol	kg/hr	16	-	6	-	-	-	22	-	8,477	-
water	kg/hr	19,472	28,353	6,444	39,407	6,842	2,699	96,375	103,217	/	63,810
glucose (ss)	kg/hr	-	-	-	-	-	-	-	-	24	-
xylose (ss)	kg/hr	-	-	-	-	-	-	-	-	353	-
arabinose (ss)	kg/hr	-	-	-	-	-	-	-	-	kg CH4/hr	-
other sugars (ss)	kg/hr	-	-	-	-	-	-	-	-	-	-
cellobiose (ss)	kg/hr	-	-	-	-	-	-	-	-	-	-
glucose oligomers (ss)	kg/hr	-	-	-	-	-	-	-	-	-	-
xyolose oligomers (ss)	kg/hr	-	-	-	-	-	-	-	-	-	-
other oligomers (ss)	kg/hr	-	-	-	-	-	-	-	-	-	-
CSL (ss)	kg/hr	15	-	18	-	-	-	33	-	-	0
(NH4)2SO4 (ss)	kg/hr	-	417	-	-	-	-	417	-	-	262
NH4 acetate (ss)	kg/hr	-	804	-	-	-	-	870	-	-	0
Others (soluble solids)	kg/hr	-	-	-	-	-	-	-	-	-	-
Acetic Acid	kg/hr	53	-	13	-	-	-	66	-	-	-
Sulfuric Acid	kg/hr	-	-	-	-	-	-	-	-	-	-
Furfural	kg/hr	433	-	24	-	-	-	456	-	-	2
HMF	kg/hr	30	-	2	-	-	-	31	-	-	0
Carbon Dioxide	kg/hr	-	-	-	-	-	-	-	-	-	-
Methane	kg/hr	-	-	-	-	-	-	-	-	-	-
Oxygen	kg/hr	-	-	-	-	-	-	-	-	442,114	-
Nitrogen	kg/hr	-	-	-	-	-	-	-	-	-	-
Ammonia	kg/hr	-	4	-	-	-	-	4	-	-	0
NH4 OH	kg/hr	-	54	-	-	-	-	54	-	-	7
Others	kg/hr	1	-	2	-	-	-	3	-	-	0
Cellulose (is)	kg/hr	-	-	-	-	-	-	-	-	-	-
Xylan (is)	kg/hr	-	-	-	-	-	-	-	-	-	-
Arabinan (is)	kg/hr	-	-	-	-	-	-	-	-	-	-
Other Sugar Polymers (is)	kg/hr	-	-	-	-	-	-	-	-	-	-
Cellulase (is)	kg/hr	-	-	-	-	-	-	-	-	-	-
Biomass (is)	kg/hr	-	-	-	-	-	-	-	-	-	-
Zymo. (is)	kg/hr	-	-	-	-	-	-	-	-	-	-
Lignin (is)	kg/hr	-	-	-	-	-	-	-	-	-	-
Gypsum (is)	kg/hr	-	-	-	-	-	-	-	-	-	-
Ca(OH)2 (is)	kg/hr	-	-	-	-	-	-	-	-	-	-
Others (is)	kg/hr	-	-	-	-	-	-	-	-	-	-
*Average Density	g/ml	-	0.929	0.946	-	-	0.665	-	-	-	0.997

VER	DESCRIPTION	DATE
A	SUBCONTRACTOR UPDATE	4/98
B	BASECASE UPDATE	9/98
C	WWT UPDATE	11/98
D	DESIGN REPORT	2/99
		LL 2/24/99

NATIONAL RENEWABLE ENERGY LABORATORY
Biotechnology Center For Fuels And Chemicals

SECTION A600
WASTE WATER TREATMENT

PFD-P100-A602 D

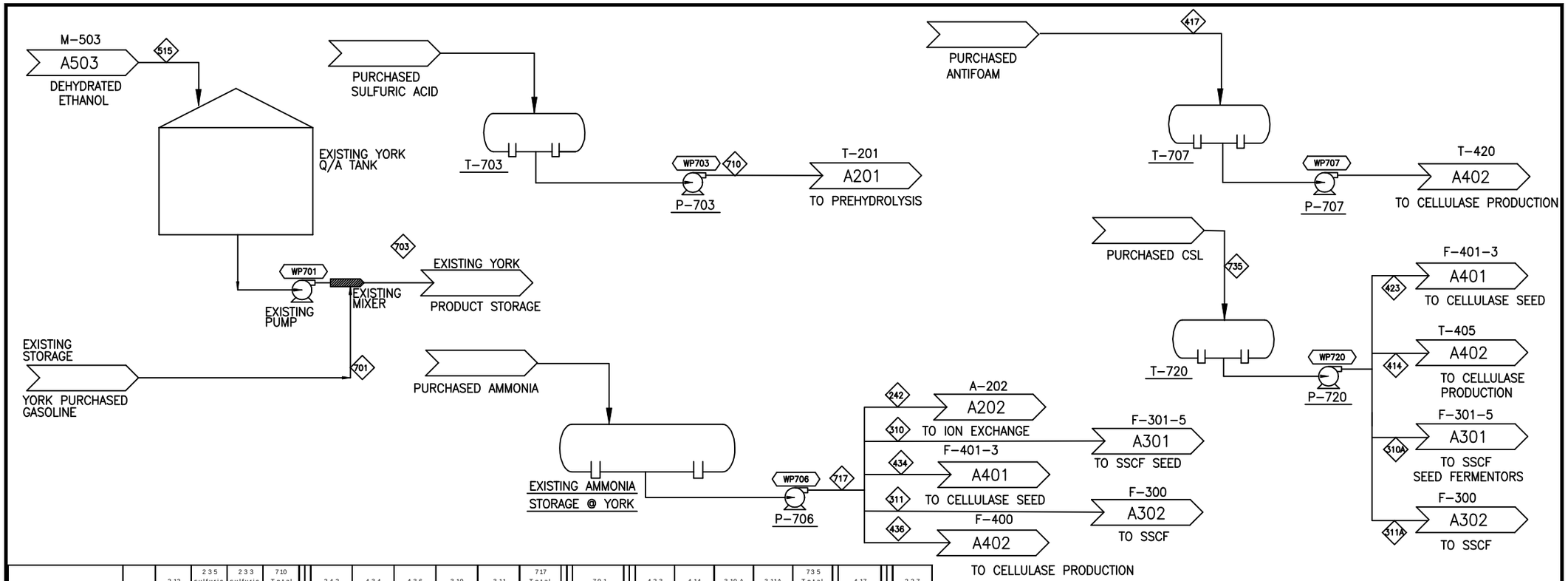

		212 sulfuric	235 sulfuric acid	233 sulfuric acid	710 Total sulfuric	242 ammonia	434 ammonia	436 ammonia	310 ammonia	311 ammonia	717 Total ammonia	701 denaturent	423 CSL	414 CSL	310A CSL	311A CSL	735 Total CSL	417 antifoam	227 lime
Total flow	kg/hr	414	302	144	860	311	3	55	4	71	445	391	11	140	270	438	859	79	337
insoluble solids	%	0.0%	0.0%	0.0%	0.0%	0.0%	0.0%	0.0%	0.0%	0.0%	0.0%	0.0%	0.0%	0.0%	0.0%	0.0%	0.0%	0.0%	100.0%
soluble solids	%	0.0%	0.0%	0.0%	0.0%	0.0%	0.0%	0.0%	0.0%	0.0%	0.0%	0.0%	100.0%	100.0%	100.0%	100.0%	100.0%	0.0%	0.0%
temp.	°C	20	20	20	20	20	28	28	35	35	20	20	28	28	35	35	35	28	20
pressure	atm	3.40	3.40	3.40	3.40	17.00	1.00	1.00	1.00	1.00	1.00	1.00	1.00	1.00	1.00	1.00	1.00	1.00	1.00
vapor fraction		-	-	-	-	-	1.00	1.00	1.00	1.00	1.00	-	-	-	-	-	-	-	-
ethanol	kg/hr	-	-	-	-	-	-	-	-	-	-	-	-	-	-	-	-	-	-
water	kg/hr	-	-	-	-	-	-	-	-	-	-	-	-	-	-	-	-	-	-
glucose (ss)	kg/hr	-	-	-	-	-	-	-	-	-	-	-	-	-	-	-	-	-	-
xylose (ss)	kg/hr	-	-	-	-	-	-	-	-	-	-	-	-	-	-	-	-	-	-
arabinose (ss)	kg/hr	-	-	-	-	-	-	-	-	-	-	-	-	-	-	-	-	-	-
other sugars (ss)	kg/hr	-	-	-	-	-	-	-	-	-	-	-	-	-	-	-	-	-	-
cellobiose (ss)	kg/hr	-	-	-	-	-	-	-	-	-	-	-	-	-	-	-	-	-	-
glucose oligomers (ss)	kg/hr	-	-	-	-	-	-	-	-	-	-	-	-	-	-	-	-	-	-
xyolose oligomers (ss)	kg/hr	-	-	-	-	-	-	-	-	-	-	-	-	-	-	-	-	-	-
other oligomers (ss)	kg/hr	-	-	-	-	-	-	-	-	-	-	-	-	-	-	-	-	-	-
CSL (ss)	kg/hr	-	-	-	-	-	-	-	-	-	-	-	11	140	270	438	859	-	-
(NH4)2SO4 (ss)	kg/hr	-	-	-	-	-	-	-	-	-	-	-	-	-	-	-	-	-	-
NH4 acetate (ss)	kg/hr	-	-	-	-	-	-	-	-	-	-	-	-	-	-	-	-	-	-
Others (soluble solids)	kg/hr	-	-	-	-	-	-	-	-	-	-	-	-	-	-	-	-	-	-
Acetic Acid	kg/hr	-	-	-	-	-	-	-	-	-	-	-	-	-	-	-	-	-	-
Sulfuric Acid	kg/hr	414	302	144	860	-	-	-	-	-	-	-	-	-	-	-	-	-	-
Furfural	kg/hr	-	-	-	-	-	-	-	-	-	-	-	-	-	-	-	-	-	-
HMF	kg/hr	-	-	-	-	-	-	-	-	-	-	-	-	-	-	-	-	-	-
Carbon Dioxide	kg/hr	-	-	-	-	-	-	-	-	-	-	-	-	-	-	-	-	-	-
Methane	kg/hr	-	-	-	-	-	-	-	-	-	-	-	-	-	-	-	-	-	-
Oxygen	kg/hr	-	-	-	-	-	-	-	-	-	-	-	-	-	-	-	-	-	-
Nitrogen	kg/hr	-	-	-	-	-	-	-	-	-	-	-	-	-	-	-	-	-	-
Ammonia	kg/hr	-	-	-	-	311	3	50	4	71	440	-	-	-	-	-	-	-	-
NH4 OH	kg/hr	-	-	-	-	-	-	-	-	-	-	-	-	-	-	-	-	-	-
Others	kg/hr	-	-	-	-	-	-	4	-	-	4	391	-	-	-	-	-	79	-
Cellulose (is)	kg/hr	-	-	-	-	-	-	-	-	-	-	-	-	-	-	-	-	-	-
Xylan (is)	kg/hr	-	-	-	-	-	-	-	-	-	-	-	-	-	-	-	-	-	-
Arabinan (is)	kg/hr	-	-	-	-	-	-	-	-	-	-	-	-	-	-	-	-	-	-
Other Sugar Polymers (is)	kg/hr	-	-	-	-	-	-	-	-	-	-	-	-	-	-	-	-	-	-
Cellulase (is)	kg/hr	-	-	-	-	-	-	-	-	-	-	-	-	-	-	-	-	-	-
Biomass (is)	kg/hr	-	-	-	-	-	-	-	-	-	-	-	-	-	-	-	-	-	-
Zymo. (is)	kg/hr	-	-	-	-	-	-	-	-	-	-	-	-	-	-	-	-	-	-
Lignin (is)	kg/hr	-	-	-	-	-	-	-	-	-	-	-	-	-	-	-	-	-	-
Gypsum (is)	kg/hr	-	-	-	-	-	-	-	-	-	-	-	-	-	-	-	-	-	-
Ca(OH)2 (is)	kg/hr	-	-	-	-	-	-	-	-	-	-	-	-	-	-	-	-	-	337
Others (is)	kg/hr	-	-	-	-	-	-	-	-	-	-	-	-	-	-	-	-	-	-
*Average Density	g/ml	3.102	3.102	3.102	3.102	0.610	0.001	0.001	0.001	0.001	0.001	0.688	0.991	0.991	0.984	0.984	0.984	0.888	2.343

VER	DESCRIPTION	DATE
A	SUBCONTRACTOR UPDATE	4/98
B	BASECASE UPDATE	9/98
C	DESIGN REPORT	2/99
		LL 2/24/99

NREL NATIONAL RENEWABLE ENERGY LABORATORY
Biotechnology Center For Fuels And Chemicals

SECTION A700
STORAGE

PFD-P100-A701 C

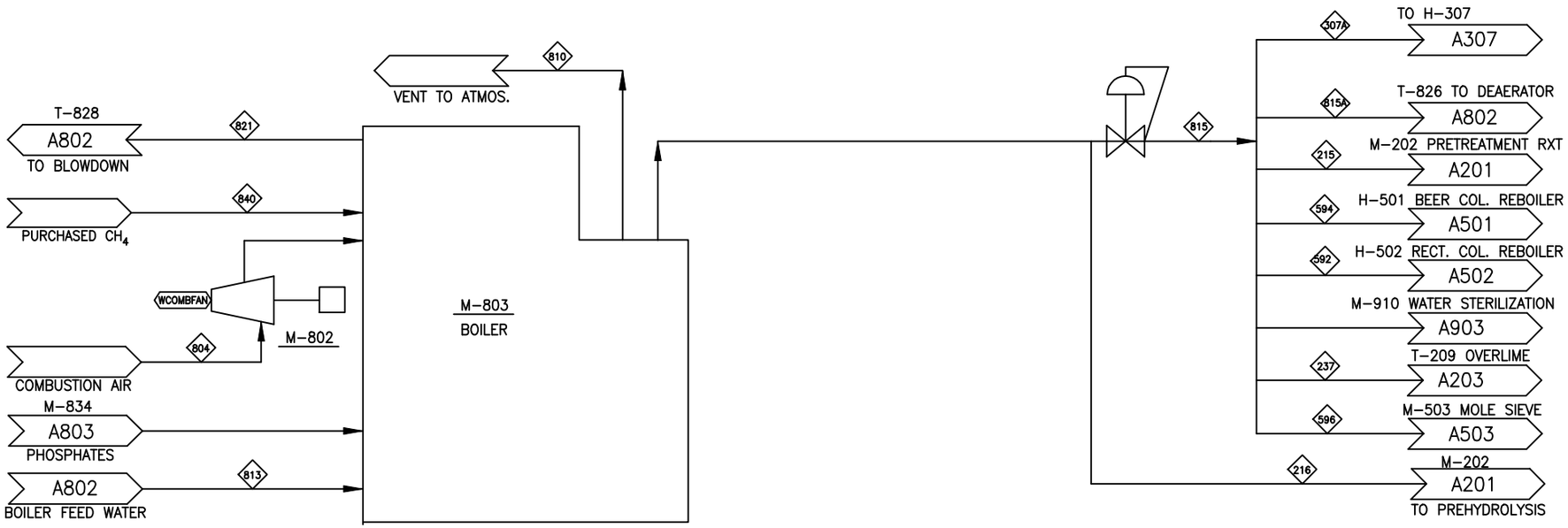

		813 BFW	840 purchased methane (kg)	804 combustion air	815 LP steam out	total LP (#/hr)	815A LP steam for deaerator	215 LP pretreat-ment	594 LP stripper column	592 LP rectification	237 LP overliming	596 LP mole sieve	307A LP to hydrolysis warmer	216 HP pretreat-ment	total HP (#/hr)	821 boiler blowdown	810 exhaust to atm
Total flow	kg/hr	80,536	3,651	-	59,647	131,411	12,060	7,622	25,190	3,230	1,167	229	10,149	18,191	40,077	2,699	-
insoluble solids	%	0.0%	0.0%	0.0%	0.0%	0.0%	0.0%	0.0%	0.0%	0.0%	0.0%	0.0%	0.0%	0.0%	0.0%	0.0%	0.0%
soluble solids	%	0.0%	0.0%	0.0%	0.0%	0.0%	0.0%	0.0%	0.0%	0.0%	0.0%	0.0%	0.0%	0.0%	0.0%	0.0%	0.0%
temp.	°C	138	-	-	170	170	170	170	170	170	170	170	170	198	198	321	-
pressure	atm	3.40	-	-	4.42	4.42	4.42	4.42	4.42	4.42	4.42	4.42	4.42	14.63	14.63	112.62	-
vapor fraction		-	-	-	1.00	1.00	1.00	1.00	1.00	1.00	1.00	1.00	1.00	1.00	1.00	-	-
ethanol	kg/hr	-	-	-	-	-	-	-	-	-	-	-	-	-	-	-	-
water	kg/hr	80,536	-	-	59,647	131,411	12,060	7,622	25,190	3,230	1,167	229	10,149	18,191	40,077	2,699	-
glucose (ss)	kg/hr	-	-	-	-	-	-	-	-	-	-	-	-	-	-	-	-
xylose (ss)	kg/hr	-	-	-	-	-	-	-	-	-	-	-	-	-	-	-	-
arabinose (ss)	kg/hr	-	-	-	-	-	-	-	-	-	-	-	-	-	-	-	-
other sugars (ss)	kg/hr	-	-	-	-	-	-	-	-	-	-	-	-	-	-	-	-
cellobiose (ss)	kg/hr	-	-	-	-	-	-	-	-	-	-	-	-	-	-	-	-
glucose oligomers (ss)	kg/hr	-	-	-	-	-	-	-	-	-	-	-	-	-	-	-	-
xyolose oligomers (ss)	kg/hr	-	-	-	-	-	-	-	-	-	-	-	-	-	-	-	-
other oligomers (ss)	kg/hr	-	-	-	-	-	-	-	-	-	-	-	-	-	-	-	-
CSL (ss)	kg/hr	-	-	-	-	-	-	-	-	-	-	-	-	-	-	-	-
(NH4)2SO4 (ss)	kg/hr	-	-	-	-	-	-	-	-	-	-	-	-	-	-	-	-
NH4 acetate (ss)	kg/hr	-	-	-	-	-	-	-	-	-	-	-	-	-	-	-	-
Others (soluble solids)	kg/hr	-	-	-	-	-	-	-	-	-	-	-	-	-	-	-	-
Acetic Acid	kg/hr	-	-	-	-	-	-	-	-	-	-	-	-	-	-	-	-
Sulfuric Acid	kg/hr	-	-	-	-	-	-	-	-	-	-	-	-	-	-	-	-
Furfural	kg/hr	-	-	-	-	-	-	-	-	-	-	-	-	-	-	-	-
HMF	kg/hr	-	-	-	-	-	-	-	-	-	-	-	-	-	-	-	-
Carbon Dioxide	kg/hr	-	-	-	-	-	-	-	-	-	-	-	-	-	-	-	-
Methane	kg/hr	-	-	-	-	-	-	-	-	-	-	-	-	-	-	-	-
Oxygen	kg/hr	-	-	-	-	-	-	-	-	-	-	-	-	-	-	-	-
Nitrogen	kg/hr	-	-	-	-	-	-	-	-	-	-	-	-	-	-	-	-
Ammonia	kg/hr	-	-	-	-	-	-	-	-	-	-	-	-	-	-	-	-
NH4 OH	kg/hr	-	-	-	-	-	-	-	-	-	-	-	-	-	-	-	-
Others	kg/hr	-	-	-	-	-	-	-	-	-	-	-	-	-	-	-	-
Cellulose (is)	kg/hr	-	-	-	-	-	-	-	-	-	-	-	-	-	-	-	-
Xylan (is)	kg/hr	-	-	-	-	-	-	-	-	-	-	-	-	-	-	-	-
Arabinan (is)	kg/hr	-	-	-	-	-	-	-	-	-	-	-	-	-	-	-	-
Other Sugar Polymers (is)	kg/hr	-	-	-	-	-	-	-	-	-	-	-	-	-	-	-	-
Cellulase (is)	kg/hr	-	-	-	-	-	-	-	-	-	-	-	-	-	-	-	-
Biomass (is)	kg/hr	-	-	-	-	-	-	-	-	-	-	-	-	-	-	-	-
Zymo. (is)	kg/hr	-	-	-	-	-	-	-	-	-	-	-	-	-	-	-	-
Lignin (is)	kg/hr	-	-	-	-	-	-	-	-	-	-	-	-	-	-	-	-
Gypsum (is)	kg/hr	-	-	-	-	-	-	-	-	-	-	-	-	-	-	-	-
Ca(OH)2 (is)	kg/hr	-	-	-	-	-	-	-	-	-	-	-	-	-	-	-	-
Others (is)	kg/hr	-	-	-	-	-	-	-	-	-	-	-	-	-	-	-	-
Average Density	g/ml	0.927	-	-	0.002	0.002	0.002	0.002	0.002	0.002	0.002	0.002	0.002	0.005	0.005	0.665	-

VER	DESCRIPTION	DATE
A	SUBCONTRACTOR UPDATE	4/98
B	BASECASE UPDATE	9/98
C	DESIGN REPORT	2/99
		LL 2/24/99

NATIONAL RENEWABLE ENERGY LABORATORY
Biotechnology Center For Fuels And Chemicals

SECTION A800
BOILER

PFD-P100-A801 C

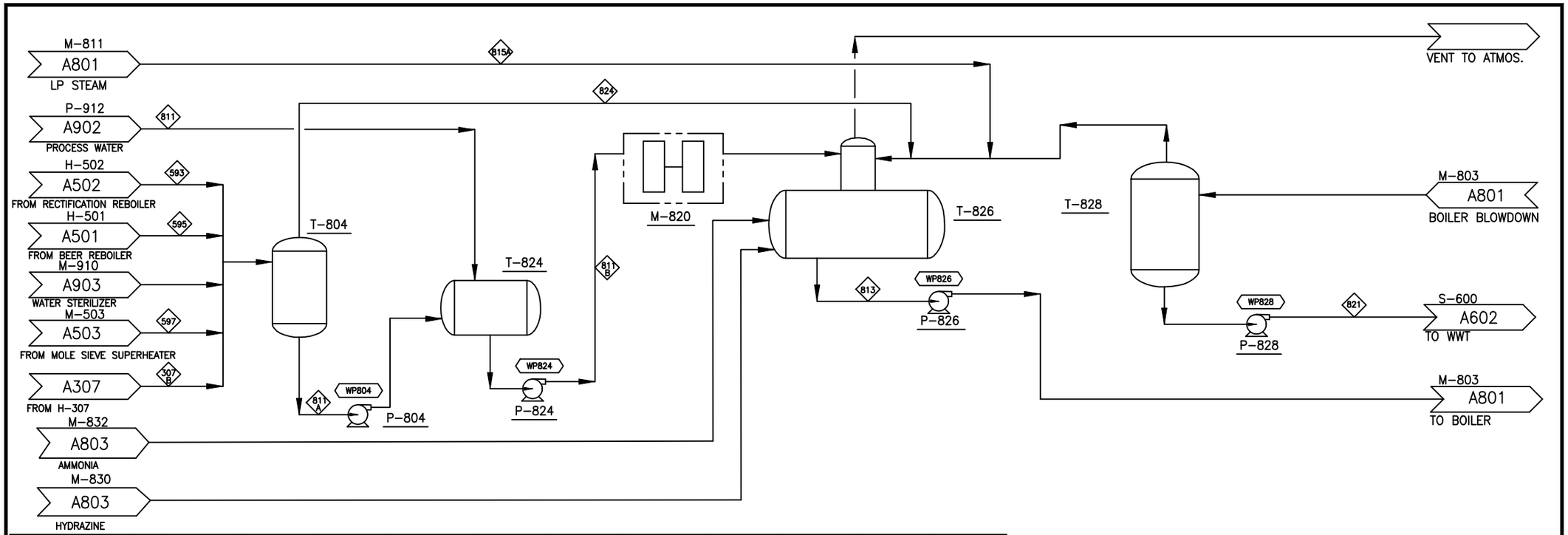

		593 rectifier condensate	595 stripping condensate	597 mol. sieve condensate	307B hydrolysis steam condensate	811 Boiler feed make-up	811A condensate tank	824 condensate direct to deaerator	811B condensate drum	813 BFW	815A LP steam for deaerator	821 boiler blowdown to WWT
Total flow	kg/hr	3,230	25,190	229	10,149	29,678	15,325	23,473	45,003	80,536	12,060	2,699
insoluble solids	%	0.0%	0.0%	0.0%	0.0%	0.0%	0.0%	0.0%	0.0%	0.0%	0.0%	0.0%
soluble solids	%	0.0%	0.0%	0.0%	0.0%	0.0%	0.0%	0.0%	0.0%	0.0%	0.0%	0.0%
temp.	°C	148	148	148	148	20	148	148	32	138	170	321
pressure	atm	4.42	4.42	4.42	4.42	3.40	4.42	4.42	4.42	3.40	4.42	112.62
vapor fraction		-	-	-	-	-	-	-	-	-	1.00	-
ethanol	kg/hr	-	-	-	-	-	-	-	-	-	-	-
water	kg/hr	3,230	25,190	229	10,149	29,678	15,325	23,473	45,003	80,536	12,060	2,699
glucose (ss)	kg/hr	-	-	-	-	-	-	-	-	-	-	-
xylose (ss)	kg/hr	-	-	-	-	-	-	-	-	-	-	-
arabinose (ss)	kg/hr	-	-	-	-	-	-	-	-	-	-	-
other sugars (ss)	kg/hr	-	-	-	-	-	-	-	-	-	-	-
cellobiose (ss)	kg/hr	-	-	-	-	-	-	-	-	-	-	-
glucose oligomers (ss)	kg/hr	-	-	-	-	-	-	-	-	-	-	-
xyolose oligomers (ss)	kg/hr	-	-	-	-	-	-	-	-	-	-	-
other oligomers (ss)	kg/hr	-	-	-	-	-	-	-	-	-	-	-
CSL (ss)	kg/hr	-	-	-	-	-	-	-	-	-	-	-
(NH4)2SO4 (ss)	kg/hr	-	-	-	-	-	-	-	-	-	-	-
NH4 acetate (ss)	kg/hr	-	-	-	-	-	-	-	-	-	-	-
Others (soluble solids)	kg/hr	-	-	-	-	-	-	-	-	-	-	-
Acetic Acid	kg/hr	-	-	-	-	-	-	-	-	-	-	-
Sulfuric Acid	kg/hr	-	-	-	-	-	-	-	-	-	-	-
Furfural	kg/hr	-	-	-	-	-	-	-	-	-	-	-
HMF	kg/hr	-	-	-	-	-	-	-	-	-	-	-
Carbon Dioxide	kg/hr	-	-	-	-	-	-	-	-	-	-	-
Methane	kg/hr	-	-	-	-	-	-	-	-	-	-	-
Oxygen	kg/hr	-	-	-	-	-	-	-	-	-	-	-
Nitrogen	kg/hr	-	-	-	-	-	-	-	-	-	-	-
Ammonia	kg/hr	-	-	-	-	-	-	-	-	-	-	-
NH4 OH	kg/hr	-	-	-	-	-	-	-	-	-	-	-
Others	kg/hr	-	-	-	-	-	-	-	-	-	-	-
Cellulose (is)	kg/hr	-	-	-	-	-	-	-	-	-	-	-
Xylan (is)	kg/hr	-	-	-	-	-	-	-	-	-	-	-
Arabinan (is)	kg/hr	-	-	-	-	-	-	-	-	-	-	-
Other Sugar Polymers (is)	kg/hr	-	-	-	-	-	-	-	-	-	-	-
Cellulase (is)	kg/hr	-	-	-	-	-	-	-	-	-	-	-
Biomass (is)	kg/hr	-	-	-	-	-	-	-	-	-	-	-
Zymo. (is)	kg/hr	-	-	-	-	-	-	-	-	-	-	-
Lignin (is)	kg/hr	-	-	-	-	-	-	-	-	-	-	-
Gypsum (is)	kg/hr	-	-	-	-	-	-	-	-	-	-	-
Ca(OH)2 (is)	kg/hr	-	-	-	-	-	-	-	-	-	-	-
Others (is)	kg/hr	-	-	-	-	-	-	-	-	-	-	-
Average Density	g/ml	0.865	0.865	0.865	0.865	0.998	0.946	0.946	0.865	0.927	0.002	0.665

VER	DESCRIPTION	DATE
A	SUBCONTRACTOR UPDATE	4/98
B	BASECASE UPDATE	9/98
C	DESIGN REPORT	2/99
		LL 2/24/98

NATIONAL RENEWABLE ENERGY LABORATORY
Biotechnology Center For Fuels And Chemicals

SECTION A800
BOILER FEED WATER PREPARATION

PFD-P100-A802 C

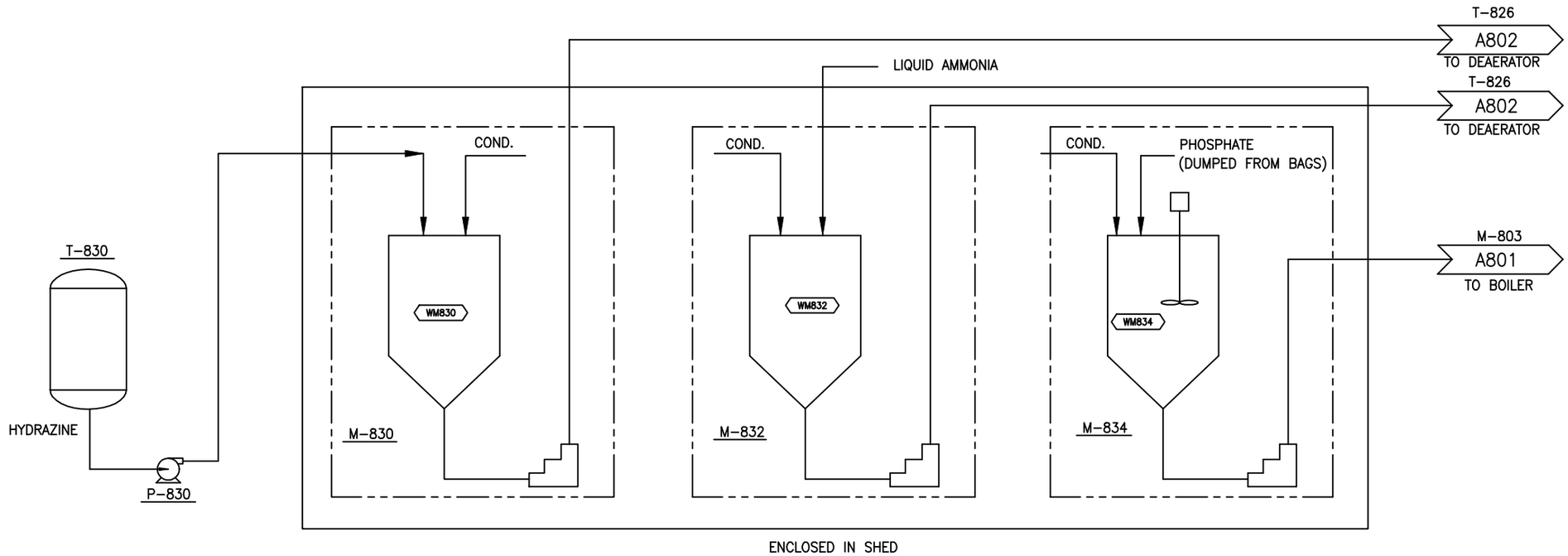

	SCALE	DATE
A	SUBCONTRACTOR UPDATE	4/16/98
B	BASELINE UPDATE	9/21/98
		LL2/5/99

NATIONAL RENEWABLE ENERGY LABORATORY
Biotechnology Center For Fuels And Chemicals

SECTION A800
BOILER FEED WATER CHEMICALS

PFD-P100-A803 B

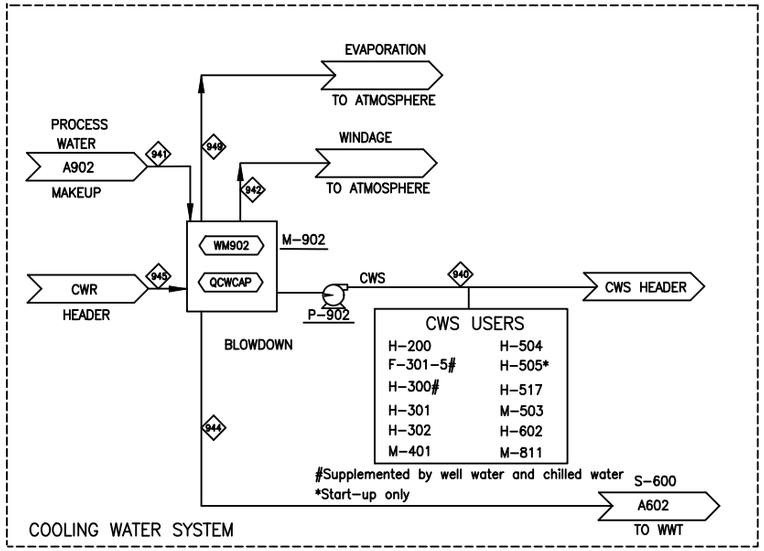

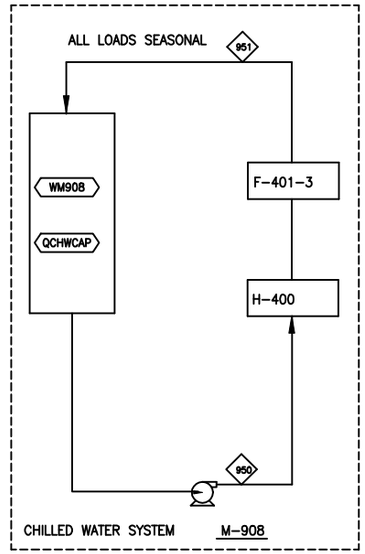

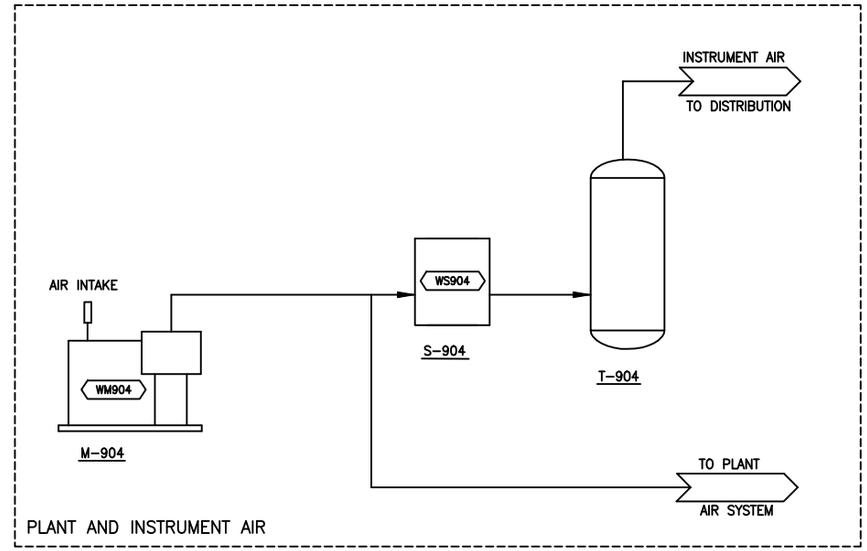

		940 to cooling exchangers	gpm	941 cooling tower make-up	gpm	942 windage to atm	gpm	944 to WWT	gpm	945 from cooling exchangers	949 evap. to atm	gpm	950 chilled water	951 chilled water feed
Total flow	kg/hr	5,553,810	24,885	75,268	337	4,422	20	6,842	31	5,553,810	64,004	287	2,276,429	2,276,429
insoluble solids	%	0.0%	0.0%	0.0%	0.0%	0.0%	0.0%	0.0%	0.0%	0.0%	0.0%	0.0%	0.0%	0.0%
soluble solids	%	0.0%	0.0%	0.0%	0.0%	0.0%	0.0%	0.0%	0.0%	0.0%	0.0%	0.0%	0.0%	0.0%
temp.	°C	37	-	28	-	28	-	28	-	28	28	-	4	8
pressure	atm	4.08	-	1.00	-	1.00	-	1.00	-	4.08	0.04	-	4.08	4.08
vapor fraction		-	-	-	-	-	-	-	-	-	1.00	-	-	-
ethanol	kg/hr	-	-	-	-	-	-	-	-	-	-	-	-	-
water	kg/hr	5,553,810	-	75,268	-	4,422	-	6,842	-	5,553,810	64,004	-	2,276,429	2,276,429
glucose (ss)	kg/hr	-	-	-	-	-	-	-	-	-	-	-	-	-
xylose (ss)	kg/hr	-	-	-	-	-	-	-	-	-	-	-	-	-
arabinose (ss)	kg/hr	-	-	-	-	-	-	-	-	-	-	-	-	-
other sugars (ss)	kg/hr	-	-	-	-	-	-	-	-	-	-	-	-	-
cellobiose (ss)	kg/hr	-	-	-	-	-	-	-	-	-	-	-	-	-
glucose oligomers (ss)	kg/hr	-	-	-	-	-	-	-	-	-	-	-	-	-
xyolose oligomers (ss)	kg/hr	-	-	-	-	-	-	-	-	-	-	-	-	-
other oligomers (ss)	kg/hr	-	-	-	-	-	-	-	-	-	-	-	-	-
CSL (ss)	kg/hr	-	-	-	-	-	-	-	-	-	-	-	-	-
(NH4)2SO4 (ss)	kg/hr	-	-	-	-	-	-	-	-	-	-	-	-	-
NH4 acetate (ss)	kg/hr	-	-	-	-	-	-	-	-	-	-	-	-	-
Others (soluble solids)	kg/hr	-	-	-	-	-	-	-	-	-	-	-	-	-
Acetic Acid	kg/hr	-	-	-	-	-	-	-	-	-	-	-	-	-
Sulfuric Acid	kg/hr	-	-	-	-	-	-	-	-	-	-	-	-	-
Furfural	kg/hr	-	-	-	-	-	-	-	-	-	-	-	-	-
HMF	kg/hr	-	-	-	-	-	-	-	-	-	-	-	-	-
Carbon Dioxide	kg/hr	-	-	-	-	-	-	-	-	-	-	-	-	-
Methane	kg/hr	-	-	-	-	-	-	-	-	-	-	-	-	-
Oxygen	kg/hr	-	-	-	-	-	-	-	-	-	-	-	-	-
Nitrogen	kg/hr	-	-	-	-	-	-	-	-	-	-	-	-	-
Ammonia	kg/hr	-	-	-	-	-	-	-	-	-	-	-	-	-
NH4 OH	kg/hr	-	-	-	-	-	-	-	-	-	-	-	-	-
Others	kg/hr	-	-	-	-	-	-	-	-	-	-	-	-	-
Cellulose (is)	kg/hr	-	-	-	-	-	-	-	-	-	-	-	-	-
Xylan (is)	kg/hr	-	-	-	-	-	-	-	-	-	-	-	-	-
Arabinan (is)	kg/hr	-	-	-	-	-	-	-	-	-	-	-	-	-
Other Sugar Polymers (is)	kg/hr	-	-	-	-	-	-	-	-	-	-	-	-	-
Cellulase (is)	kg/hr	-	-	-	-	-	-	-	-	-	-	-	-	-
Biomass (is)	kg/hr	-	-	-	-	-	-	-	-	-	-	-	-	-
Zymo. (is)	kg/hr	-	-	-	-	-	-	-	-	-	-	-	-	-
Lignin (is)	kg/hr	-	-	-	-	-	-	-	-	-	-	-	-	-
Gypsum (is)	kg/hr	-	-	-	-	-	-	-	-	-	-	-	-	-
Ca(OH)2 (is)	kg/hr	-	-	-	-	-	-	-	-	-	-	-	-	-
Others (is)	kg/hr	-	-	-	-	-	-	-	-	-	-	-	-	-
*Average Density	g/ml	-	-	0.991	-	-	-	-	-	-	-	-	-	-

VER	DESCRIPTION	DATE
A	SUBCONTRACTOR UPDATE	4/98
A	SUBCONTRACTOR UPDATE	9/98
A	SUBCONTRACTOR UPDATE	2/99
		LL 2/24/99

NREL NATIONAL RENEWABLE ENERGY LABORATORY
Biotechnology Center For Fuels And Chemicals

SECTION A900
COOLING WTR PLNT & INST AIR SYS

PFD-P100-A901 C

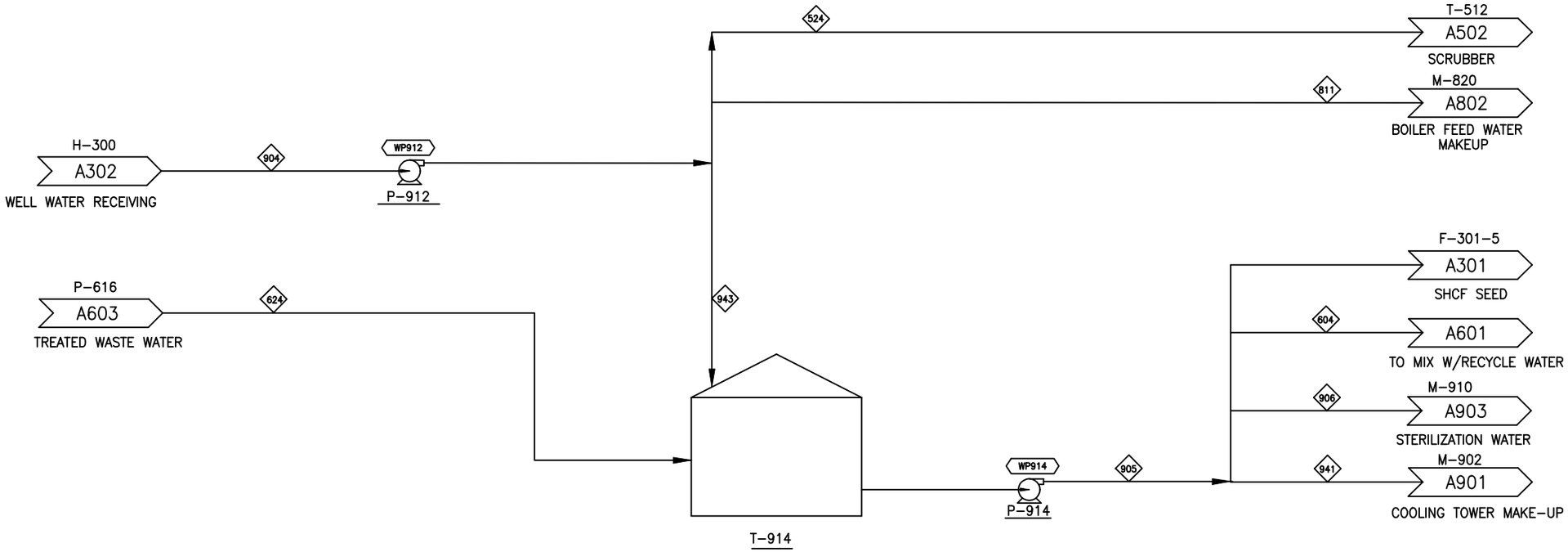

		524 well water to scrubber	604 to mix with recycle water	624 treated waste water	811 Boiler feed make-up	904 well water	gpm	905 process water	ferm. seed water	906 sterilization water	941 cooling tower make-up	943 well water to process water
Total flow	kg/hr	6,786	36,924	64,081	29,678	79,972	352	107,589	-	28	75,268	43,508
insoluble solids	%	0.0%	0.0%	0.0%	0.0%	0.0%	0.0%	0.0%	0.0%	0.0%	0.0%	0.0%
soluble solids	%	0.0%	0.0%	0.4%	0.0%	0.0%	0.0%	0.0%	0.0%	0.0%	0.0%	0.0%
temp.	°C	26	20	21	20	26	-	24	-	20	28	28
pressure	atm	1.00	1.00	1.00	3.40	1.00	-	1.00	-	1.00	1.00	1.00
vapor fraction		-	-	-	-	-	-	-	-	-	-	-
ethanol	kg/hr	-	-	-	-	-	-	-	-	-	-	-
water	kg/hr	6,786	36,924	63,810	29,678	79,972	-	107,318	-	28	75,268	43,508
glucose (ss)	kg/hr	-	-	-	-	-	-	-	-	-	-	-
xylose (ss)	kg/hr	-	-	-	-	-	-	-	-	-	-	-
arabinose (ss)	kg/hr	-	-	-	-	-	-	-	-	-	-	-
other sugars (ss)	kg/hr	-	-	-	-	-	-	-	-	-	-	-
cellobiose (ss)	kg/hr	-	-	-	-	-	-	-	-	-	-	-
glucose oligomers (ss)	kg/hr	-	-	-	-	-	-	-	-	-	-	-
xyolose oligomers (ss)	kg/hr	-	-	-	-	-	-	-	-	-	-	-
other oligomers (ss)	kg/hr	-	-	-	-	-	-	-	-	-	-	-
CSL (ss)	kg/hr	-	-	0	-	-	-	0	-	-	-	-
(NH4)2SO4 (ss)	kg/hr	-	-	262	-	-	-	262	-	-	-	-
NH4 acetate (ss)	kg/hr	-	-	0	-	-	-	0	-	-	-	-
Others (soluble solids)	kg/hr	-	-	-	-	-	-	-	-	-	-	-
Acetic Acid	kg/hr	-	-	-	-	-	-	-	-	-	-	-
Sulfuric Acid	kg/hr	-	-	-	-	-	-	-	-	-	-	-
Furfural	kg/hr	-	-	2	-	-	-	2	-	-	-	-
HMF	kg/hr	-	-	0	-	-	-	0	-	-	-	-
Carbon Dioxide	kg/hr	-	-	-	-	-	-	-	-	-	-	-
Methane	kg/hr	-	-	-	-	-	-	-	-	-	-	-
Oxygen	kg/hr	-	-	-	-	-	-	-	-	-	-	-
Nitrogen	kg/hr	-	-	-	-	-	-	-	-	-	-	-
Ammonia	kg/hr	-	-	0	-	-	-	0	-	-	-	-
NH4 OH	kg/hr	-	-	7	-	-	-	7	-	-	-	-
Others	kg/hr	-	-	0	-	-	-	0	-	-	-	-
Cellulose (is)	kg/hr	-	-	-	-	-	-	-	-	-	-	-
Xylan (is)	kg/hr	-	-	-	-	-	-	-	-	-	-	-
Arabinan (is)	kg/hr	-	-	-	-	-	-	-	-	-	-	-
Other Sugar Polymers (is)	kg/hr	-	-	-	-	-	-	-	-	-	-	-
Cellulase (is)	kg/hr	-	-	-	-	-	-	-	-	-	-	-
Biomass (is)	kg/hr	-	-	-	-	-	-	-	-	-	-	-
Zymo. (is)	kg/hr	-	-	-	-	-	-	-	-	-	-	-
Lignin (is)	kg/hr	-	-	-	-	-	-	-	-	-	-	-
Gypsum (is)	kg/hr	-	-	-	-	-	-	-	-	-	-	-
Ca(OH)2 (is)	kg/hr	-	-	-	-	-	-	-	-	-	-	-
Others (is)	kg/hr	-	-	-	-	-	-	-	-	-	-	-
*Average Density	g/ml	1.005	0.998	0.997	0.998	0.993	-	0.994	-	0.998	0.991	0.991

VER	DESCRIPTION	DATE
A	SUBCONTRACTOR UPDATE	4/98
B	BASECASE UPDATE	9/98
C	DESIGN REPORT	2/99
		LL 2/25/99

NATIONAL RENEWABLE ENERGY LABORATORY
Biotechnology Center For Fuels And Chemicals

SECTION A900
PROCESS WATER

PFD-P100-A902 C

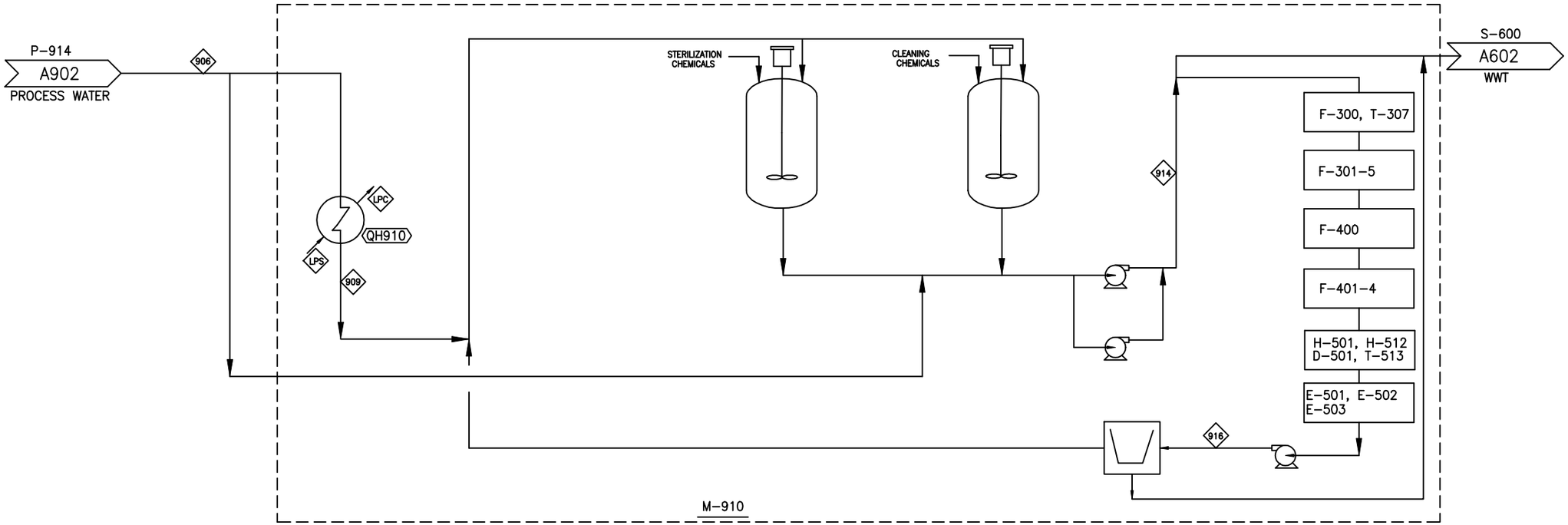

VER	DESCRIPTION	DATE
A	SUBCONTRACTOR UPDATE	4/98
B	BASECASE UPDATE	9/98
C	DESIGN REPORT	2/99
		LL 2/25/99

NATIONAL RENEWABLE ENERGY LABORATORY
Biotechnology Center For Fuels And Chemicals

SECTION A900
STERILE WATER & CIP/CS SYSTEMS

PFD-P100-A903 C