11/9/95 JSO

October 1995 • NREL/TP-421-7942

New Bern Biomass to Energy Project Phase I: Feasibility Study

Stone & Webster, Weyerhauser, Amoco, and Carolina Power & Light

National Renewable Energy Laboratory
1617 Cole Boulevard
Golden, Colorado 80401-3393
A national laboratory of the U.S. Department of Energy
Managed by Midwest Research Institute
for the U.S. Department of Energy
Under Contract No. DE-AC36-83CH10093

DISTRIBUTION OF THIS DOCUMENT IS UNLIMITED

NREL/TP-421-7942 ● UC Category: 1503 ● DE95013140

New Bern Biomass to Energy Project Phase I: Feasibility Study

Stone & Webster, Weyerhauser, Amoco, and Carolina Power & Light

NREL Technical Monitors:
F. Parson, R. Bain

National Renewable Energy Laboratory
1617 Cole Boulevard
Golden, Colorado 80401-3393
A national laboratory of the U.S. Department of Energy
Managed by Midwest Research Institute
for the U.S. Department of Energy
Under Contract No. DE-AC36-83CH10093

Prepared under Subcontract Number RCA-3-13326

October 1995

MASTER

DISTRIBUTION OF THIS DOCUMENT IS UNLIMITED

This publication was reproduced from the best available camera-ready copy submitted by the subcontractor and received no editorial review at NREL.

NOTICE

This report was prepared as an account of work sponsored by an agency of the United States government. Neither the United States government nor any agency thereof, nor any of their employees, makes any warranty, express or implied, or assumes any legal liability or responsibility for the accuracy, completeness, or usefulness of any information, apparatus, product, or process disclosed, or represents that its use would not infringe privately owned rights. Reference herein to any specific commercial product, process, or service by trade name, trademark, manufacturer, or otherwise does not necessarily constitute or imply its endorsement, recommendation, or favoring by the United States government or any agency thereof. The views and opinions of authors expressed herein do not necessarily state or reflect those of the United States government or any agency thereof.

Available to DOE and DOE contractors from:
Office of Scientific and Technical Information (OSTI)
P.O. Box 62
Oak Ridge, TN 37831
Prices available by calling (615) 576-8401

Available to the public from:
National Technical Information Service (NTIS)
U.S. Department of Commerce
5285 Port Royal Road
Springfield, VA 22161
(703) 487-4650

Printed on paper containing at least 50% wastepaper, including 10% postconsumer waste

Final Report

presented to

National Renewable Energy Laboratory
and
Electric Power Research Institute

New Bern Biomass to Energy Project
Phase 1 Feasibility Study

Response to NREL Contract No. LOI No. RCA-3-13326

National Renewable Energy Laboratory

Technical Monitors: Frankie Parson, Richard Bain

Prepared by:

Stone & Webster

Weyerhaeuser

Amoco

CP&L Carolina Power & Light

Disclaimer of Warranties and Limitation of Liabilities

This report was prepared by the organization(s) named below as an account of work cosponsored by the National Renewable Energy Laboratory (NREL) and the Electric Power Research Institute, Inc. (EPRI). Neither NREL, EPRI, any member of NREL or EPRI, the organization(s) named below, nor any person acting on behalf of any of them:

(A) Makes any warranty or representation whatsoever, expressed or implied, (I) with respect to the use of any information, apparatus, method, process, or similar items disclosed in this report, including merchantability and fitness for a particular purpose, or (II) that such use does not infringe on or interfere with privately owned rights, including any party's intellectual property, or (III) that this report is suitable to any particular user's circumstance; or

(B) Assumes responsibility for any damages or other liability whatsoever (including any consequential damages, even if NREL, EPRI, or the organizations named below has been advised of the possibility of such damages) resulting from your selection or use of this report or any information, apparatus, method, process, or similar item disclosed in this report.

Organization(s) that prepared this report:

Weyerhaeuser Company
Amoco
Carolina Power & Light Company
Stone & Webster Engineering Corporation

Abstract

Weyerhaeuser, together with Amoco and Carolina Power & Light, performed a detailed evaluation of biomass gasification and enzymatic processing of biomass to ethanol. This evaluation assesses the potential of these technologies for commercial application to determine which technology offers the best opportunity at this time to increase economic productivity of forest resources in an environmentally sustainable manner. The work performed included preparation of site-specific plant designs that integrate with the Weyerhaeuser New Bern, North Carolina pulp mill to meet overall plant energy requirements, cost estimates, resource and product market assessments, and technology evaluations. The Weyerhaeuser team was assisted by Stone & Webster Engineering Corporation and technology vendors in developing the necessary data, designs, and cost information used in this comparative study.

Based on the information developed in this study and parallel evaluations performed by Weyerhaeuser and others, biomass gasification for use in power production appears to be technically and economically viable. Options exist at the New Bern mill which would allow commercial scale demonstration of the technology in a manner that would serve the practical energy requirements of the mill. A staged project development plan has been prepared for review. The plan would provide for a low-risk and cost demonstration of a biomass gasifier as an element of a boiler modification program and then allow for timely expansion of power production by the addition of a combined cycle cogeneration plant.

Although ethanol technology is at an earlier stage of development, there appears to be a set of realizable site and market conditions which could provide for an economically attractive woody-biomass-based ethanol facility. The market price of ethanol and the cost of both feedstock and enzyme have a dramatic impact on the projected profitability of such a plant. Additional process and project development work is required to reduce uncertainties and perceived risks before proceeding with such a project.

Executive Summary

Driven by process changes that are making pulp and paper mills increasingly dependent on purchased electric power, the industry is motivated to search for more economic technology alternatives for the production of co-generated power from its biomass residuals. Recent emphasis by the U.S. Department of Energy (DOE) in the area of renewables has provided an unusual window of opportunity for the industry to syndicate the risk of moving to a new more efficient energy generation technology. This window of opportunity comes at a time when the age of greater than 50 percent of the industry's power generation equipment will need major alternation or replacement within the next 15 years.

Two technologies that can have a profound impact on the industry's energy self sufficiency—even to substantially increasing the capability for exporting electric power—have evolved to the point of commercial readiness. These technologies are biomass gasification combined cycle (BGCC) and black liquor gasification combined cycle. A third technology, ethanol production from biomass, although not as advanced in its commercial readiness, is also of increasing interest driven by recent advances in fermentation technology and significantly increased market opportunity as a result of the environmental driver for gasoline additives.

Black liquor gasification is being actively pursued by Weyerhaeuser and others and is not considered here. This report compares, for an integrated pulp mill situation, the operating and economic realities of BGCC and biomass-to-ethanol technologies. As partners in the project, Amoco supplied the ethanol production technology input and marketing analysis; Stone & Webster Engineering Corporation provided the cost estimating and economic analysis; and Carolina Power & Light provided the power market information pertinent to North Carolina.

Detailed economics presented in this study include sensitivities to heat rate, discount rate, capacity factor, tax credits, export power prices, feedstock price, DOE capital support, and in the case of ethanol, additional sensitivities to ethanol price and enzyme cost. Analysis of all these sensitivities indicates that in the case of ethanol, the market price and enzyme cost are by far the most influential in determining the project viability. Enzyme costs less than $4/gallon of enzyme and/or ethanol prices over $1.40/gallon of ethanol appear necessary to move the ethanol concept as presented here into a economically interesting range. It should be noted, however, that the state of development of biomass to ethanol is clearly precommercial at this time and that a number of design improvements are possible that would significantly change this picture. Also, if a high-value marketable product can be developed for the lignin by-product stream, this would have a significant positive impact.

After discussing biomass gasification combined cycle options with seven potential suppliers, Tampella and TPS were selected for in-depth analysis—the results of which are presented in this report. The ability to work with these two suppliers provided an excellent opportunity to contrast a pressurized system (represented by the Tampella technology) with an atmospheric system (represented by the TPS technology). Given the degree of accuracy of this study, the capital cost of the two technologies investigated were sufficiently similar that no clear preference of one over the other could be determined based on the capital cost factor alone. However, since the operating efficiency of the pressurized technology was better, the Tampella case was taken forward for detailed economic analysis. It should be noted, however, that the pressurized system is not practical for producing fuel gas for firing in a boiler which would be the first step of a preferred staged implementation approach at the New Bern facility.

Based on the analysis of sensitivities with respect to gasification, again capital cost — and in this case, the value of export power — have by far the most significant impact on BGCC economics. Given a 50 percent shared cost for first commercial plants, a positive economic result is achievable for the plant size

studied herein at export power prices of 5¢/kWh and above. It is Weyerhaeuser's belief that this conclusion — in light of the future possibilities of integrating this technology with black liquor gasification combined cycle, the probability of a mature BGCC technology having 20-30 percent less capital cost, and anticipated trends in electricity prices — make biomass gasification combined cycle a viable and exciting future option which merits government support to encourage early commercialization.

As mentioned above, in order to advance this technology with a minimum amount of risk, a staged approach is considered preferable. Based on the results reported here, a detailed implementation plan is currently being developed for the New Bern facility which will include as a first phase an atmospheric indirect gasification plant coupled with back-pressure and condensing electric power generation. As a second phase to be implemented early in the next decade, the gas cleaning and gas turbine cycle will be added in conjunction with a black liquor combined cycle technology. With shared cost through DOE's commercialization programs (similar to the current request for proposals advanced in the Biomass Power for Rural Development solicitation), BGCC should find an early home in the forest product industry, contributing to the country's energy self sufficiency from renewable resources and improving the industry's global competitiveness.

As a final point, it should be mentioned that advancing this technology is widely supported by the industry and is consistent with the intent of the "compact" signed between the DOE and the industry in October of 1994, which is based on the industry's vision as put forth in Agenda 2020.

Contents

		Page
	Abstract	i
	Executive Summary	ii
1.0	Project Concept	1-1
	1.1 Background	1-1
	1.2 Review of Gasification Technologies	1-4
	1.2.1 Evaluation Approach	1-4
	1.2.2 General Discussion of Biomass Gasification	1-4
	1.2.3 Synopsis of Candidate Technologies	1-7
	1.2.4 Weyerhaeuser Visits to Gasification Facilities	1-13
	1.2.5 Gasification Technology Selection	1-14
	1.3 Design Basis	1-15
	1.3.1 Biomass Gasification Combined Cycle (BGCC) Cogeneration Plant	1-15
	1.3.2 Ethanol Plant	1-16
2.0	Preliminary Design and Cost	2-1
	2.1 TPS Studsvik Biomass Gasification Combined Cycle Cogeneration Plant Design	2-1
	2.2 Tampella Biomass Gasification Combined Cycle Cogeneration Plant Design	2-10
	2.3 Biomass to Ethanol Plant Design	2-23
	2.4 Material Handling Systems	2-52
	2.5 Plot Plans and Balance of Plant	2-79
	2.5.1 BGCC	2-79
	2.5.2 Ethanol Plant	2-83
	2.6 Plant Performance	2-90
	2.6.1 BGCC Cogen Plants	2-90
	2.6.2 Ethanol Cases	2-92

Contents (Cont)

			Page
	2.7	Cost Estimates	2-98
		2.7.1 Capital Cost Estimates	2-104
		2.7.2 Operating and Maintenance Cost Estimates	2-108
	2.8	Project Schedule	2-127
3.0	Regional Biomass Supply System		3-1
	3.1	Scope and Objectives	3-1
	3.2	Findings	3-1
	3.3	Approach	3-1
	3.4	Strategy 1: Capture existing volumes of residuals available to the company	3-5
	3.5	Strategy 2: Incorporate mill residuals that are currently going to landfill or lagoon disposal sites	3-9
	3.6	Strategy 3: Capture existing and/or potential wood chips both whole tree final harvest and plantation thinning chips	3-10
	3.7	Strategy 4: Grow Biomass by maximizing pine volumes per acre without giving up solid wood value	3-13
	3.8	Strategy 5: Grow maximum pine/hardwood biomass per acre trying to hold costs	3-14
	3.9	Strategy 6: Grow maximum biomass per acre with a dedicated short rotation plantation and using mill residuals and process water and/or other nutrient and water sources locally available	3-16
4.0	Preliminary Business Assessment for the Integrated Enterprise		4-1
	4.1	Economic Evaluation Method	4-1
	4.2	Analysis Input	4-2
	4.3	BGCC Plant Economic Analysis	4-5
	4.4	BGCC/Ethanol Plant Economic Analysis	4-6

Contents (Cont)

			Page
	4.5	Ethanol Plant Economic Analysis	4-7
	4.6	Comparison of BGCC, BGCC/Ethanol, and Ethanol to the Base Case Boiler Retrofit Project	4-7
	4.7	Sensitivity Analysis	4-7
5.0	Environmental Monitoring Plan		5-1
	5.1	Timberlands Environmental Monitoring	5-1
	5.2	Environmental Stewardship	5-5
	5.3	New Bern Mill Environmental Monitoring	5-7
6.0	Market Issues		6-1
	6.1	Market for Electric Power	6-1
	6.2	Fuel/Ethanol Market	6-8
	6.3	New Bern BGCC Plant Ownership Options	6-17
7.0	Socioeconomic and Environmental Evaluation		7-1
8.0	Plan for Phase II		8-1

List of Tables

1-1	Information Request - Biomass Gasification Technology Qualifications
1-2	Evaluation Criteria
1-3	BGCC Plant Design Basis
1-4	Water Analyses from Existing System at New Bern Pulp Mill
1-5	Advanced Biomass Cellulose to Ethanol Plant Design Basis
2-1	Material Balance - TPS BGCC (Flue Gas Dryer)
2-2	Equipment List - TPS BGCC (Flue Gas Dryer)
2-3	Material Balance - Tampella BGCC (Flue Gas Dryer)
2-4	Material Balance - Tampella BGCC (Steam Dryer)
2-5	Equipment List - Tampella BGCC (Flue Gas Dryer)
2-6	Equipment List - Tampella BGCC (Steam Dryer)
2-7	Material Balance - Amoco Ethanol Plant
2-8	Equipment List - Amoco Ethanol Plant
2-9	Equipment List - Feed Preparation System - TPS BGCC (Flue Gas Dryer)
2-10	Equipment List - Dolomite Receiving, Bed Sand, and Ash Removal Systems - TPS BGCC (Flue Gas Dryer)
2-11	Equipment List - Feed Preparation System - Tampella BGCC (Flue Gas Dryer)
2-12	Equipment List - Dolomite, Ash Handling Systems - Tampella BGCC (Flue Gas Dryer)
2-13	Equipment List - Feed Preparation System - Tampella BGCC (Steam Dryer)
2-14	Equipment List - Dolomite, Ash Handling Systems - Tampella BGCC (Steam Dryer)
2-15	Equipment List - Feed Preparation Stillage Handling Systems - Tampella BGCC (Flue Gas Dryer)
2-16	Equipment List - Dolomite Receiving, Ash Handling Systems - Amoco Ethanol Plant and Tampella BGCC (Flue Gas Dryer)
2-17	TPS BGCC (FGD) - Electrical Summary
2-18	TPS BGCC (No Extraction Air) - Electrical Summary
2-19	Tampella BGCC (FGD) - Electrical Summary
2-20	Tampella BGCC (Steam Dryer) - Electrical Summary
2-21	Tampella BGCC/Ethanol (FGD) - Electrical Summary
2-22	Estimate Summary - Tampella BGCC (Flue Gas Dryer)
2-23	Estimate Summary - Tampella BGCC (Steam Dryer)
2-24	Estimate Summary - TPS BGCC (Flue Gas Dryer)
2-25	Estimate Summary - Ethanol Plant
2-26	Estimate Summary - BGCC/Ethanol Combined Plant

List of Tables (Cont)

2-27	Tampella BGCC Flue Gas Dryer Design O&M Cost Summary
2-28	Tampella BGCC Steam Dryer Design O&M Cost Summary
2-29	TPS BGCC Flue Gas Dryer Design O&M Cost Summary
2-30	Ethanol Plant O&M Cost Summary
2-31	Integrated BGCC - Ethanol Plant O&M Cost Summary
2-32	Base Case (Refurbished Bark Boiler) O&M Cost Summary
3-1	Total Biomass Fuel Resource - Units - kBDT per year
3-2	Weyerhaeuser Mill Residuals
3-3	Unused External Mill Residuals
3-4	All Mill Residual (kBDT)/Year)
3-5	Forest Residuals
3-6	Final Harvest Biomass
3-7	First Thinning Biomass
3-8	Inter-row Planting
3-9	Short Rotation Pine Plantation
4-1	Economic Input Table - Biomass to Energy
4-2	Master Input Table
4-3	Incremental Plant (Alternate - Base) [A & B]
4-4	Incremental Plant (Alternate - Base) (Flue Gas Dryer) (see Flue Gas Dryer plus Ethanol Plant) [A & B]
4-5	Incremental Plant (Alternate - Base) Bark Boiler Retrofit plus Ethanol Plant
6-1	U.S. Fuel Ethanol Plants and Capacity
6-2	Selected Capacity Studies for U.S. Fuel Ethanol Plant
6-3	Companion of New Bern Ethanol Plant Capacity Statistics
6-4	New Bern Ethanol Plant Model Market Area
6-5	Ethanol Plant Model Market Area Fuel Demand
6-6	New Bern Ethanol Transportation Cost Model
6-7	New Bern Biomass to Ethanol Plant Market Model
6-8	Summary of Selected Historical Fuel Ethanol Prices (1992-1994)
6-9	1992 Ethanol Prices for Selected Markets
6-10	1993 Ethanol Prices for Selected Markets
6-11	1994 Ethanol Prices for Selected Markets

List of Figures

Figure 2-1 Process Flow Diagram - TPS BGCC (Flue Gas Dryer)

Figure 2-2 Process Flow Diagram - Tampella BGCC (Flue Gas Dryer)

Figure 2-3 Process Flow Diagram - Tampella BGCC (Steam Dryer)

Figure 2-4 Block Flow Diagram - Amoco Ethanol Plant

Figure 2-5 Process Flow Diagram - Pretreatment

Figure 2-6 Process Flow Diagram - SSF Fermentation

Figure 2-7 Process Flow Diagram - Fermentation Yeast Propagation

Figure 2-8 Process Flow Diagram - Distillation and Dehydration

Figure 2-9 Process Flow Diagram - Alcohol Storage

Figure 2-10 Process Flow Diagram - Stillage Handling

Figure 2-11 Process Flow Diagram - CIP & Nutrients

Figure 2-12 Process Flow Diagram - Chemical Storage

Figure 2-13 BGCC Retrofit Fuel/Ash Handling System Tampella Steam Dryer Case - Sheet 1 of 3

Figure 2-14 BGCC Retrofit Fuel/Ash Handling System Tampella Steam Dryer Case - Sheet 2 of 3

Figure 2-15 BGCC Retrofit Fuel/Ash Handling System Tampella Steam Dryer Case - Sheet 3 of 3

Figure 2-16 BGCC Retrofit Fuel/Ash Handling System Tampella Flue Gas Dryer Case - Sheet 1 of 3

Figure 2-17 BGCC Retrofit Fuel/Ash Handling System Tampella Flue Gas Dryer Case - Sheet 2 of 3

Figure 2-18 BGCC Retrofit Fuel/Ash Handling System Tampella Flue Gas Dryer Case - Sheet 3 of 3

Figure 2-19 BGCC Retrofit Fuel/Ash Handling System TPS Options - Sheet 1 of 3

Figure 2-20 BGCC Retrofit Fuel/Ash Handling System TPS Options - Sheet 2 of 3

Figure 2-21 BGCC Retrofit Fuel/Ash Handling System TPS Options - Sheet 3 of 3

Figure 2-22 BGCC/Ethanol Retrofit Fuel/Ash Handling System Tampella Flue Gas Dryer Case - Sheet 1 of 4

Figure 2-23 BGCC/Ethanol Retrofit Fuel/Ash Handling System Tampella Flue Gas Dryer Case - Sheet 2 of 4

Figure 2-24 BGCC/Ethanol Retrofit Fuel/Ash Handling System Tampella Flue Gas Dryer Case - Sheet 3 of 4

Figure 2-25 BGCC/Ethanol Retrofit Fuel/Ash Handling System Tampella Flue Gas Dryer Case - Sheet 4 of 4

Figure 2-26 Mill Plot Plan (Mill Storm Water Collection System)

Figure 2-27 Plot Plan - BGCC Retrofit

Figure 2-28 Plot Plan - BGCC/Ethanol Retrofit

Figure 2-29 Block Flow Diagram - TPS BGCC (Flue Gas Dryer)

List of Figures (Cont)

Figure 2-30	Block Flow Diagram - TPS BGCC (No Extraction Air)
Figure 2-31	Block Flow Diagram - Tampella BGCC (Flue Gas Dryer)
Figure 2-32	Block Flow Diagram - Tampella BGCC (Steam Dryer)
Figure 2-33	Ethanol Plant Overall Material Balance and Mill Interfaces
Figure 2-34	Block Flow Diagram - Ethanol Plant with Tampella BGCC (Flue Gas Dryer)
Figure 2-35	BGCC Project Schedule
Figure 3-1	Map of External Forest kBDT Residuals
Figure 3-2	Chart of Residual Biomass Fuel Resource
Figure 3-3	Chart of Total Biomass Fuel Resource
Figure 3-4	Map of Unused Mill Residuals/BDT
Figure 3-5	Map of Total Mill Residuals/kBDT
Figure 4-1	Option 3 - BGCC/Ethanol vs. Bark Boiler Retrofit NPV as a Function of Biomass and Enzyme Costs
Figure 4-2	Option 4 - Ethanol Plant vs. Bark Boiler Retrofit NPV as a Function of Biomass and Enzyme Costs
Figure 4-3	Sensitivity of Incremental Plant's NPV to Capital Support
Figure 4-4	Sensitivity of Incremental Plant's NPV to the Power Price
Figure 4-5	Sensitivity of Incremental Plant's NPV to Ethanol Price
Figure 4-6	Sensitivity of Incremental Plant's Price to Lignin Sales Price
Figure 4-7	Sensitivity of Incremental Plant's NPV to the Enzyme Cost
Figure 4-8	Sensitivity of Incremental Plant's NPV to Tax Credits
Figure 4-9	Sensitivity of Incremental Plant's NPV to the Export Power Capacity Factor
Figure 4-10	Sensitivity of Incremental Plant's NPV to Biomass Escalation Rate
Figure 4-11	Sensitivity of Incremental Plant's NPV to Initial Biomass Price

List of Figures (Cont)

Figure 4-12	Sensitivity of Incremental Plant's NPV to Energy Plant Capacity Factor
Figure 4-13	Sensitivity of Incremental Plant's NPV to Performance
Figure 4-14	Sensitivity of Incremental Plant's NPV to Discount Rate
Figure 4-15	Sensitivity of Incremental Plant's NPV to Capital Cost
Figure 4-16	BGCC NPV Minus New Boiler NPV vs. Power Sales Price
Figure 4-17	BGCC NPV Minus New Boiler NPV Over Project Life (Power Sales @ $0.05/kWh)
Figure 4-18	BGCC NPV Minus New Boiler NPV over Project Life (Power Sales @ $0.07/kWh)
Figure 6-1	BGCC - No DOE Contribution
Figure 6-2	With DOE Contribution
Figure 8-1	Alternatives for a Sustained Competitive Future with Government Funding

Section 1

Project Concept

The concept of this project is to define a specific dedicated feedstock supply system (DFSS) for serving an advanced biomass to energy conversion process located at Weyerhaeuser's market pulp mill in New Bern, North Carolina. This project is a feasibility study of the capital cost, operating economics, and regional impact of two technologies — biomass gasification combined cycle and biomass to ethanol.

1.1 Background

An Energy Profile of the Pulp and Paper Industry

The U.S. pulp and paper industry is the fourth largest consumer of energy among all segments of American industrial activity—and the third largest if the fuels industry itself is excepted. The manufacture of pulp and paper products in the U.S. consumes over 2,600 trillion Btu of energy annually. This large use of heat and power is exceeded among process industry manufacturers only by that of U.S. chemical plants and primary metal mills. In spite of this fact, the industry can make a claim that no other can come close to—it is over 57 percent energy self-sufficient. According to the American Forest & Paper Association (AF&PA), the industry currently derives about 40 percent of its energy needs from the burning of black liquor and around 17 percent from the burning of forest biomass and mill solid wastes. In both of these cases, the generation of steam and power is accomplished through technology that lacks efficiency in its energy conversion compared to emerging new methods.

The Uncertainty of Purchased Energy Costs

On the fuel front, the uncertainty of forces influencing prices is providing the pulp and paper industry with increased motivation to look more seriously than ever at biomass as a replacement for fossil fuels. Although the price of coal promises to be reasonably stable, the price of fuel oil and natural gas have proven impossible to predict. However, it seems unlikely that they should decrease, and many believe that natural gas prices will reach a parity with oil prices in the not-too-distant future.

Increasing American dependence on foreign oil supplies is a continuing national concern, and environmentally, the pressure to use less fossil fuel is unrelenting. The pulp and paper industry is uniquely positioned to respond positively to these converging forces.

The Opportunity for Renewable Fuels

Many U.S. pulp and paper companies generate significant quantities of alternative fuel as a natural consequence or residual of their raw material harvesting and manufacturing processes. Forest biomass and manufacturing residuals have always played an important part in mill energy generation and can easily play an even bigger part in the pulp and paper mills of the future.

The industry can increase its production of energy from renewable sources in two ways. The first is to increase the amount of biomass utilized, and the second is to increase the efficiency of the energy conversion to high pressure steam and electricity. Increasing the amount of biomass utilized can result partially from collecting more of the residuals from harvesting. Much of the limbs and trimmings now left in the forest can be delivered to the mill for use as fuel while maintaining the soils for sustainable forestry. It is further likely that the nation's commercial forests can be managed to significantly increase

yield of biomass on a sustainable basis, both for primary product and energy use. As a result, many pulp and paper mills of the future will begin to see their woodlands in terms of both fiber and fuel.

Converging Events Demand Changes

There are changes on the energy horizon. In fact, the convergence of several events may well provide a unique opportunity for the pulp and paper industry to make yet another significant step in self-sufficiency.

- Dependence on Purchased Electric Power

  Although the pulp and paper industry is currently No. 1 in the industrial generation of electricity, there is a clear movement towards more and more dependence on purchased electrical power. This undeniable trend is the result of a combination of changes in the industry's manufacturing processes. To remain competitive and satisfy stricter environmental requirements, mills are undergoing modernization and process optimization with a resulting decrease in built-in capacity for co-generation of electricity. However, as co-generation capacity decreases, electrical energy requirements are increasing. Added environmental control equipment, primarily scrubbers and precipitators, create greater electrical demand. Alternatives to chlorine bleaching sequences, involving on-site oxygen/ozone generation, and an industry trend towards more thermo-mechanical pulp also contribute to increased demand. Recycling is having electric power consequences, since using recycled fiber adds to electrical demand (except in TMP fiber replacement). Another consequence of recycling is that it leaves no appreciable amount of residue, as wood does, that can be used as fuel.

- The Aging of Black Liquor and Biomass Boilers

  As a result of industry expansion and rebuild strategies during the decades of the 60's and 70's, nearly 70 percent of the industry's recovery boilers were built or underwent major rebuilds between 1963 and 1980. Given that statistically significant data indicates the useful life of these units is around 30 years, most will need major attention or replacement over the next 15 to 20 years. A similar, although slightly less compelling, situation exists for the industry's biomass boilers. Potentially this situation represents a window of opportunity in a 30- year cycle for the introduction of more energy-efficient technology.

- Constraints on Air Emissions

  Although the industry has had an impressive record of air emissions reductions, further improvements will be necessary as we proceed into the next century. These changes will also provide challenges for the industry's processing equipment and motivation for technological change. All mills must also factor in both the capital and operating costs of continually tightening air emissions regulations.

- Capitalization

  In all that has been said to this point, the impact on capitalization must be kept in perspective. Currently, the pulp and paper industry is twice as capital intensive as the average for the industrial sector—and this capitalization is increasing at a rate of 2.7 percent per year as compared with 1.6 percent per year for all manufacturing. Any new technology introduced must provide an opportunity for reducing capital requirements per ton of product produced.

- Renewable Energy

  According to the U.S. Department of Energy (DOE), in 1995 the total biomass-based energy (measured in quads or (10^{15} Btu)) production in the U.S. will be just under 4 quads. The nation currently uses about 82 quads of energy in total. Because of its ready supply of bark and residuals (including lignin in black liquor), the pulp and paper industry is responsible for 90 percent of the national total of energy from renewable sources. DOE predicts, however, that by 2010 the national renewable energy production from biomass will rise to over 5 quads annually—and to over 15 quads by 2030. At projected growth rates of genetically improved species, the land required to achieve this 2030 objective will be over 100 million acres at the current conversion efficiency of biomass to electricity. Therefore, it will be essential, even if only a significant fraction of this goal is achieved, that biomass-to-useful-energy conversion processes be as efficient as possible.

- Biomass-to-Energy Conversion Technologies

  Conversion efficiency can be increased through innovations in drying biomass before conversion to useful energy, but will be attained primarily through advances in conversion technology. The Dutch-oven boiler of the 1950's operated at less than 15 percent overall thermal conversion efficiency to electricity with a condensing turbine. It is expected that the advanced biomass gasification combined cycle (BGCC) technologies now emerging will produce three times as much electrical energy from the same amount of biomass, operating at close to 45 percent efficiency. If these technologies can be shown to be cost-competitive, they will become the technologies of choice over the next 10 to 15 years. Biomass and black liquor will not be delivered to furnace cavities, but rather to gasifiers. The gases exiting the gasifier will be cleaned and used to fuel gas turbine combustors and the lime kiln. Steam will be produced in heat recovery steam generators downstream of the gas turbines. This steam will be used for further power generation and for process steam. The result will be a significant technology shift for many of the industry's manufacturing facilities, from high-steam/moderate-electricity operation to lower-steam/higher-electricity operating designs. BGCC systems will be an important part of that technology shift.

We are entering an era where considerably increased attention is going to be focused on biomass as an energy source. Because of such focus, technology advancement in growing, harvesting and conversion of biomass to energy will likely occur. This is happening at a time when much of the technology for gasification combined cycle has been developed as a result of the last decade's intense funding by the DOE of the clean coal program — and when mills need the capability for more electric power generation, air emissions regulations are becoming more stringent, the industry's black liquor and biomass boilers are maturing, and the need for lower capital technologies is clear.

All these factors present a challenging but strategically advantageous opportunity to transform many of the American pulp and paper industry's operating facilities from net power consumers into balanced producer/consumers, or even net power producers.

It is for these reasons that Weyerhaeuser—in partnership with Amoco, Carolina Power and Light (CP&L) and Stone & Webster—applied for and received from NREL and EPRI shared support to undertake this feasibility study. The compelling reasons for including an evaluation of the biomass-to-ethanol technology contributed by Amoco were the realization that export power may not always be the most attractive marketable product from an integrated facility and that the advances being made by developers of biomass-to-ethanol processes are nearing the point where this technology must be considered as a serious alternative. It is believed that this feasibility study represents a first attempt to compare biomass gasification combined cycle technology with biomass to ethanol at a real site-specific operating market pulp mill.

1.2 Review of Gasification Technologies

The first major decision point of the Phase I Feasibility Study was to select the biomass gasification technology that would be the basis for the preliminary engineering and costing of the New Bern Mill retrofit project.

1.2.1 Evaluation Approach

Available biomass gasification technologies were identified from Weyerhaeuser and Stone & Webster experience and from the literature. The developers or licensors of these technologies were then contacted to determine if they wished to be considered for the Weyerhaeuser New Bern Biomass to Energy Demonstration Project. The candidate technologies were as follows:

- Bioflow (Ahlstrom/Sydkraft)
- Enviropower (Tampella Power)
- HTW (high temperature Winkler, licensed by Lurgi)
- TPS Termiska Processer
- Lurgi CFB Gasification Process
- Battelle Low Inlet Velocity Gasification Process (licensed by FERCO)
- MTCI Steam Reforming Process (ThermoChem)
- American Carbons Inc. Pyrolysis/Carbonization Process

To obtain the latest information on the technology, its state of development and the capabilities of the owner/licensor, each owner/licensor was sent a "Request for Qualifications" which included the information request presented in Table 1-1. After responses were received, meetings were scheduled to allow the project team to ask follow up questions. The meetings were attended by Stone & Webster, Weyerhaeuser and Amoco team members and NREL observers. Prior to the meetings the project team developed evaluation criteria which are given in Table 1-2.

To further assess the state of development of the technologies, Weyerhaeuser personnel toured several research, pilot and commercial gasification facilities subsequent to the technology supplier interviews.

1.2.2 General Discussion of Biomass Gasification

In the gasification process the biomass is heated to vaporize water and volatile compounds. Heavier organic compounds are cracked into lower molecular weight compounds and several chemical reactions involving carbon, carbon monoxide, steam, hydrogen, low molecular weight hydrocarbons and oxygen occur. The heat required to maintain the required gasification temperature is usually provided through the combustion of a portion of the carbon to carbon dioxide which means a controlled amount of air is introduced into the gasifier. The resulting fuel gas will therefore be diluted with nitrogen and steam and will have a heating value of about 150 Btu/standard cubic foot (scf). Alternatively the heat for gasification can be provided indirectly which avoids production of carbon dioxide through combustion and introduction of nitrogen with the air stream. In these indirect designs, the resulting fuel gas will have a heating value in the range of 400 to 500 Btu/scf. The MTCI and Battelle processes involve indirect heating approaches.

Table 1-1: Information Request Biomass Gasification Technology Qualifications

1.	Provide any company/corporate information you consider pertinent to this project and include a copy of your latest annual report
2.	Describe in as much detail as possible your biomass gasification technology and how it can be utilized to provide fuel gas for a gas turbine/combined cycle cogeneration plant, your approach to dealing with gas cleanup, and clearly explain the boundaries/battery limits/interfaces of the technology you would provide; i.e., the scope of your responsibility. Describe the usefulness of any by-product the technology may produce. Also discuss the environmental impacts of the technology.
3.	Explain the ownership rights to the technology including all its parts as provided by patents, licensing agreements, etc.
4.	Are there any unresolved legal actions regarding ownership of or rights to the technology or any part of it?
5.	Explain your business plans with respect to this technology, including any applicable license and/or royalty fees, e.g., will license technology only and provide a process design package; will design fabricate and supply major equipment; will furnish and erect complete scope of the technology; etc.
6.	Explain guarantees offered.
7.	Discuss the state of development of the technology; include bench scale, pilot scale, demonstration and commercial facilities planned, under construction or built; to the extent possible, for each facility provide location, date in service, size (capacity) and biomass feedstock(s). For pilot scale and larger facilities, we are interested in operating hours logged to date and longest continuous run. For demonstration and commercial plants, annual on-stream factors (actual annual production divided by theoretical production if operated at full capacity for the entire year) is of importance.
8.	What experience regarding biomass feedstocks have you had? Discuss feed preparation requirements and allowable variability. For each feedstock that you have experience with, we would appreciate any available process heat and material balances including compositions of input and output streams.
9.	We are interested in your opinion as to the ability to design a plant to handle multiple feedstocks such as harvested biomass, bark, sawdust and pulp mill sludge. What testing would be required to establish a design basis? Where would this testing be performed, and what would be your estimate of the cost?
10.	State capacity (in million Btu(s) per hour of product gas) of the largest single gasifier which you would be willing to offer and your basis for scale up.
11.	Discuss your perspective of maintenance requirements for your technology, including frequency intervals and planned maintenance outage duration. For demonstration and commercial plants for which you have experience, provide to the degree possible any annual forced outage rates and major causes of unplanned or forced outages.
12.	We are also interested in your view of operating requirements (labor, skill level, utilities, etc.), ease of operation, turndown capability, start-up and shut-down considerations and safety issues that distinguish your technology from that of competitors.
13.	Please describe any previous experience in working in or designing systems to be compatible with the pulp and paper operating environment; e.g., process steam systems, process integration, mass/energy considerations relative to host mill, environmental benefits/impacts, etc.
14.	Please indicate if you are willing to offer any cost sharing to participate in the demonstration.

Table 1-2: Evaluation Criteria

Commercial readiness of technology	• Hours of operation (Pilot/Commercial) • Longest continuous operating time • Maintenance history • Ownership • Guarantees • Reliability • Identified technical and operating hurdles/issues • Demonstrated reliability of data • Engineering evaluation completed (existing eng. design package) • Cost to develop • Development schedule
Supplier Profile	• Manufacturing capability • Credibility of cost estimating/scale-up • Technical support capabilities • Track record of process design/scale-up • Project engineering and management capability • Financial viability of company • Experience with forest products industry • Commitment to product line • Installation list for related technologies • Scope of supply
Suitability for BGCC application in pulp and paper environment	• Process steam opportunity • Degree of process integration • Useful by-product • Mass/energy considerations relative to host mill • Environmental benefits/impacts
Operation and control considerations	• Number of operations • Control loops and philosophy • Maintenance • Availability • Start-up/shutdown • Size considerations (how big) • Scale-up (how much larger than existing units) • Ease of operation • Safety • Material of construction
Opportunity for competitive advantage	• Concessions/license • Shared risk • Cost/operational economics • Thermal efficiency • Market potential • Marketing/sales capacity
Adaptability to changing feedstocks	• Experience with biomass feedstocks • Feedstock flexibility • Capital cost impact • Operational cost impact

The TPS, Lurgi CFB, MTCI, Battelle, and American Carbons processes operate at near atmospheric pressure and therefore the fuel gas must be compressed for gas turbine applications. The Bioflow (Ahlstrom), Tampella, and HTW processes are being developed specifically for integrated gas turbine combined cycle applications. These processes operate at a sufficient pressure (above 300 psig) such that the fuel gas product can be fed to the selected combustion turbine without additional compression.

The elements of a complete gasification plant include the fuel processing system, the gasifier vessel, the ash removal system and fuel gas cooling and cleanup systems. Pressurized gasification processes require more complex feed and ash removal systems. The most critical part of the process is the cleanup system. Proven cleanup systems include bag filters and scrubbers.

To minimize cooling of the fuel gas and avoid decreasing the overall efficiency of the gasification power plant, Ahlstrom and Tampella employ hot gas cleanup technology which consists of developmental ceramic candle filters. One advantage of the hot gas cleanup approach is that the gasification plant produces no wastewater.

Fluidized bed gasifiers operate at conditions which with many biomass feeds will result in a fuel gas containing a small, but potentially troublesome quantity of heavy organic compounds called tars. These tars condense upon cooling of the fuel gas and may cause plugging and fouling problems. The tars can be removed with water scrubbing, but this reduces the overall efficiency of the process and increases the wastewater treatment requirements. Limestone or dolomite has been shown to catalyze the cracking of tars to trouble-free lower molecular weight compounds.

Air blown fluidized bed gasifiers produce a fuel gas with a significant ammonia content which would result in high nitrogen oxides (NO_x) emissions upon combustion of the fuel gas. Cold gas cleanup approaches can incorporate acid scrubbers to remove the ammonia. However, the more efficient hot gas cleanup processes requires post combustion selective catalytic reduction to meet NO_x standards.

The proposed biomass feed is approximately 50 percent by weight water. In order to produce a fuel gas with a minimum acceptable heating value for gas turbine applications, the air blown gasifiers typically require a maximum moisture content of about 20 percent by weight thus requiring the inclusion of a dryer. A dryer increases capital costs, requires a heat source that can impact the overall biomass to power efficiency, and adds the potential for air emissions from the dryer exhaust.

For the Ahlstrom and Tampella technologies employing dry, hot gas clean up, removing alkali compounds from the hot raw fuel gas is an important consideration. For these technologies the fuel gas must be cooled to a low enough temperature to condense the alkali compounds. These compounds condense on particulate matter present and are then captured by the hot gas filter. If the proper conditions for this to occur are not provided, the turbine fuel specification may be violated.

1.2.3 Synopsis of the Candidate Technologies

Tampella

Tampella Power Corporation is developing a pressurized, air blown, hot gas cleanup, integrated gasification combined cycle technology. The gasifier is a spouting type fluidized bed which was developed by the Institute of Gas Technology (IGT) for solid fuels including coal, biomass, peat, and petroleum coke. Tampella purchased licenses for these technologies (U-Gas for coal and RENUGAS for biomass) in 1989. Tampella established a new subsidiary, Enviropower Inc. to pursue and demonstrate the application of the technology.

For biomass feeds, dolomite is injected into the gasifier to control tar formation and to provide additional particulate matter on which alkalis can condense prior to removal in a ceramic candle filter.

Tampella designed and built a 15 megawatt thermal (MWt) pilot plant in Finland based on the licensed technology. The pilot plant through November, 1993 had gasified approximately 265 tons of hardwood (trunk-wood with bark), 1900 tons of hardwood and softwood mixtures, and 1450 tons of hardwood, softwood, and saw-mill residue mixtures. Wood feedstocks tested include Spruce, Larch, Pines, Birch, and Alder. During the test runs the gasifier was operated at capacities ranging from 50-60 MBtu/hr. The heating value of the product gas ranged from 135-160 Btu/scf, suitable fuel for a gas turbine generator. The hot gas cleanup system performed to expectations: no tars; particulates below detection limits (<5 ppmw); and acceptable alkalis (.01-.1 ppmw). The ammonia content of the product gas ranged from 650 to 2,000 ppmw. During December,1994, a 50/50 mixture of 22 tons of Danish straw and Columbian coal were successfully run. In February, 1995, 700 tons composed of mixtures of 50 percent Finnish hardwood and softwood and 50 percent mill wastes (bark, sludge, saw residues, paper, wood residue and plastics) were gasified without any difficulty.

In addition to a license for the use of the technology, Tampella would expect to provide as a minimum the process and engineering design for the proprietary components of the gasification island. Tampella would consider furnishing the gasification island on a turnkey basis. Tampella's preferred battery limits for the gasification island are downstream of the gasification system and upstream of the gas turbine inlet control valve. Included within these limits are feed systems, the gasifier, gas cooling, hot gas cleanup, solids removal, and participation in the design of the heat recovery steam generator (HRSG).

Tampella is not prepared to offer commercial guarantees on the technology prior to a commercial scale demonstration. Tampella is ready to design a single gasifier to feed a gas turbine as large as the General Electric Frame 6FA. The resulting biomass gasification combined cycle plant would have a net power output of 105 MWe.

Based on pilot plant operations, Potential Problems Analysis (PPA) and other safety studies performed by Tampella/Enviropower for the gasifier system, 15 to 25 percent unscheduled outages are anticipated for the commercial demonstration. For follow on projects Tampella expects the unscheduled down time to drop to 10 percent to 15 percent. Coupled with scheduled downtime the mature technology is expected to have an availability of 82 percent to 88 percent.

Battelle

The Battelle Low Inlet Velocity Gasification (LIVG) process is an indirectly heated, atmospheric pressure, circulating fluid bed gasifier. The feed is brought to gasification temperature by mixing with hot sand. The gasifier is fluidized with either steam or recycle fuel gas. Since no air is used in the reaction vessel, the process produces a medium Btu heating value fuel gas without the use of oxygen. The gasifier is operated to achieve incomplete carbon conversion and as a result the medium Btu gas leaves the gasifier with sand and char. The char and sand are separated and fed into a separate circulating fluidized bed combustor where the char is burned and reheats the sand which is collected and fed back to the gasifier inlet.

Battelle began developing the process in 1977 and built a process research unit (PRU) in 1980. The PRU gasifier was initially 6-inch diameter, but has since been replaced with a 10-inch diameter gasifier which has a maximum capacity of about 3 MWt with wood feed.

Battelle has accumulated over 20,000 hours of testing in the PRU. A wide range of materials have been tested including hardwood and softwood chips, shredded bark, sawdust, whole tree chips, shredded stump material, refuse-derived fuel (RDF), hybrid poplar and switchgrass.

The longest continuous run in the PRU has been 96 hours. Battelle reports that since its inception, the PRU has operated very reliably.

Battelle has published several papers publicizing the advantages of the process, but the papers do not detail the complete process requirements. The papers show no dolomite injection for tar control. The fuel gas is cleaned of particulate matter using a water scrubber. The flue gas from the combustor vessel is used in a biomass feed dryer. It is not clear whether additional cleanup of both the fuel gas (to meet gas turbine requirements) and the flue gas to meet emission limits will be required.

In late 1992 Battelle granted Future Energy Resources Corporation (FERCO) rights to the technology, FERCO with the help of Zurn Nepco is currently developing projects based on the technology. They have a contract to build a demonstration facility at the existing wood-fired McNeil power station in Burlington, Vermont. The plant is scheduled to be operational in 1996. The gasifier will have a capacity of 200 tons per day (TPD) of dry feed (about 25 MWt). The gas will be initially fired in the existing boiler, but the plan is to add a 1600 kW gas turbine later.

Depending on the customer's preference, FERCO will either license the technology and provide a process design package or provide a complete turnkey project covering the gasification island or the complete gasification power plant. FERCO will provide guarantees once the demonstration project in Burlington has been successful.

TPS Termiska Processer (TPS)

TPS is an independent Swedish company specializing in energy and environmental process research and technology development. TPS's research and development on biomass gasification began in the late 1970s. During the early 1980s they focused on the development of MINO pressurized oxygen blown biomass gasifier and built a 2.5 MWt pilot plant. Beginning in 1985 TPS in cooperation with ABB-Flakt of Sweden developed a bark-fueled air-blown circulating fluid bed gasifier to produce a low Btu gas for firing in lime kilns in kraft pulp mills. A 2 MWt pilot plant was built and research and pilot plant test work focused on the air-blown atmospheric pressure process and its application to the thermal processing of biomass and waste fuels. Wood chips, wood pellets, pelletized industrial waste, pelletized RDF, and more recently Brazilian eucalyptus have been tested in the pilot plant.

TPS believes a separate tar cracker vessel following the gasifier is required to control tar formation. The tar cracker is a fluidized bed of dolomite. The process includes cold gas cleanup of the fuel gas consisting of a bag filter and an acid scrubber to remove ammonia.

Two 15 MWt RDF-fueled gasifiers have been built in Italy providing fuel for a boiler and a cement factory. The first unit began operation in November 1991 and the second unit in September 1992. Most of the problems in the plant have been associated with equipment outside of the gasification system. During tests in April 1992 availabilities of more than 85 percent were recorded. TPS is currently studying the feasibility of a 50 MWt cogeneration project in Sweden. TPS is one of two gasifiers being considered for the Brazilian Biomass Gasification Combined Cycle Demonstration Project.

TPS is willing to scale up a single gasifier to 100 MWt capacity. TPS will license the technology and provide engineering and services and startup assistance. TPS would consider providing a performance guarantee.

HTW

The HTW gasification process is a pressurized version of the atmospheric pressure Winkler coal gasifier which was widely applied until the 1960s. Rheinbraun AG, a German coal company, began developing the HTW process in 1974 in order to utilize German brown coal. The process can be operated with either air to produce a low Btu heating value gas or with oxygen to produce a medium Btu heating value gas.

In 1979, Rheinbraun commissioned a 25 to 40 ton per day (TPD) pilot plant in Germany which operates at 146 psi. In 1985 the first commercial size plant was started up in Germany. The plant capacity is 730 dry TPD of brown coal. It used oxygen and produces a synthesis gas which is converted to methanol.

In 1988, an HTW plant in Finland began operation. The unit was recently shut down. It was designed for 27 TPH of dry peat (about 90 MWt), but the actual feed was a mixture of 60 percent peat and 40 percent wood. The plant operated at pressures as high as 190 psi, was oxygen blown, and produced a synthesis gas which was converted to ammonia.

In 1989, Rheinbraun started up a pilot plant in Germany for gasification tests at pressures up to 365 psi. This pilot plant has a capacity of 160 TPD of dry German brown coal (about 30 MWt).

Rheinbraun reports that the above plants have been very reliable.

For projects based on the HTW technology, Rheinbraun will provide a license for one time use of the technology. Rheinbraun has entered into an exclusive arrangement with Lurgi and Uhde, two German engineering firms. The two companies will provide each licensor with an engineering package (conceptual/preliminary design) and furnish proprietary equipment. The technology scope or gasification process island will cover the biomass dryer to the inlet of the gas turbine. Typical process guarantees will be provided covering biomass throughput, gas production, gas composition, power and utilities consumption, as well as pertinent environmental performance.

Based on information provided by Lurgi, the process scheme for biomass includes dry particulate control using candle filters and does not include dolomite injection for tar control. The ash withdrawn from the bottom of the gasifier contains about 60 to 70 percent carbon or char by weight and could be used as fuel for a boiler.

MTCI

MTCI refers to its gasification process as steam reforming technology because it is an indirectly heated fluidized bed gasifier using steam instead of air to fluidize the bed. Heat exchanger tubes in the bed provide the heat necessary to sustain the gasification reactions. The heat source inside the tubes is flue gas generated by combusting a portion of the product gas. Since air is not used, a medium Btu heating value gas is produced.

The key to the technology is the pulsed combustor developed by MTCI. The pulsing action enhances the heat transfer from the flue gas through the tubes to the bed of feed being gasified.

MTCI has built a 33 lb/hr pilot unit and during 1985 and 1986 under a DOE program tested biomass feeds including pistachio shells, wood chips, rice hulls, recycle paper mill sludge, Kraft mill sludge, RDF, and municipal solid waste. A larger pilot plant (200 lb/hr) was built and from 1987 to 1989 was used to test paper mill wastes and black liquor. In 1990 EPA sponsored tests using municipal solid waste and RDF.

In 1992 MTCI built a 1 ton per hour (TPH) paper mill sludge gasifier at an Inland Container Corporation plant in California. Testing of the unit began in May 1992. A successful 500 hour extended duration test was conducted during July 1993. A total of 138 tons of as-received sludge was gasified. The gasifier and pulsed combustor heat exchanger were 100 percent available during this test run. However, the actual availability of the unit was 85 percent due to problems with the sludge feeder and utility supply.

The Inland Container unit was shut down and relocated to MTCI's Baltimore facility where it is used for large scale pilot testing. About 23 tons of wood chips and 20 tons of wheat straw were recently tested in the unit. MTCI has reportedly sold a 60 TPD black liquor gasifier in India, a 120 TPD distillery spent wash gasifier in India and a 1 TPH black liquor gasifier in Spain. These units were built during 1992 and 1993. A 120 TPD black liquor gasifier was built with DOE support at the Weyerhaeuser pulp mill in New Bern, North Carolina. The unit was started up in the spring of 1994. About 2 months into the startup an internal cyclone in the gasifier broke away from its support and damaged some of the in bed heat exchanger tubes. Repairs are being made.

To date MTCI has focused on applications directly coupled to an existing boiler. They have provided conceptual schemes for integration with a combustion turbine which state that a venturi scrubber is one of the options for removing particulates from the fuel gas. They do not discuss tar formation and do not show injection of dolomite.

MTCI has created a subsidiary company called ThermoChem to market the technology. For each project ThermoChem intends to form a joint venture company with an engineer/procure/construct (EPC) contractor to provide a turnkey installation including the power generation equipment. They will also operate the unit. The permitting and operation and maintenance will be sub-contracted to Ogden Environmental Services. Licenses, royalties and guarantees are subject to negotiation.

Lurgi CFB

Lurgi is a major supplier of circulating fluid bed (CFB) boilers. A 1.7 MWt pilot plant in Frankfurt was used to develop an atmospheric pressure CFB process. Lurgi states that the process can be operated with either air or oxygen, but all the experience to date appears to be with air. Petcoke, coal, lignite, anthracite culm, wood, tree bark, waste wood, straw, RDF, rubber waste and pulp mill sludges have been tested in the pilot plant.

In 1987, a 25 MWt gasifier was placed in service at a pulp and paper mill in Austria. The gasifier produces low Btu gas fuel for a lime kiln. This plant was designed for tree bark, wood waste and up to 20 percent paper mill sludge. Lurgi states that the only problems with the plant has been due to the biomass dryer. The dryer was designed to dry feeds ranging from 15 percent to 50 percent moisture. The feeds tested however have exceeded 50 percent moisture content. The plant has successfully tested straw.

A 100 MWt gasifier is currently under construction in Germany. The gasifier is designed for a mixture of lignite, demolition wood waste, RDF, and rubber waste. The low Btu gas produced will be fired in a cement kiln.

Lurgi has provided a scheme for gas turbine application which shows a fuel gas cleanup system that comprises a secondary cyclone, a dry filter (the filter type is not specified) and a two stage scrubber. Particulates are removed in the cyclone and filter and undesired inorganic (ammonia, hydrogen cyanide, hydrochloric acid, etc.) and organic (phenols, fatty acids, oil, i.e. the tars) are removed in a two stage scrubbing system. Particulates captured in the cyclone and filter are recycled to the gasifier. The only

outlet for ash is from the bottom of the gasifier and Lurgi states that this ash is very low in carbon content.

For each project based on the CFB gasifier, Lurgi will provide a license for one time use of the technology. As part of the licensing agreement, there will be requirements that Lurgi provide as a minimum a process design package, technical assistance for the detail design, startup and initial operation and supply of all proprietary equipment. The technology boundary is from the biomass dryer to the inlet of the gas turbine. Lurgi will provide typical process guarantees covering biomass throughput, gas production, gas composition, power and utilities consumption, as well as pertinent environmental performance.

Bioflow

In the early 1980s, A. Ahlstrom Corporation of Finland, well known for its circulating fluid bed boilers, developed an air blown, atmospheric pressure biomass gasifier to provide a fuel gas for lime kilns. The first commercial unit was installed in 1983 at a Finnish mill. To date Ahlstrom has supplied three more of these gasifiers.

In mid 1991, Ahlstrom and Sydkraft AB, the largest private utility company in Sweden, agreed to jointly develop integrated biomass gasification combined cycle (IGCC) technology based on a pressurized version of the Ahlstrom CFB gasifier. Ahlstrom built a 7 MWt pressurized gasifier pilot plant in Finland and tested waste wood chips, bark and sawdust.

Based on the pilot plant test results, the companies began developing an 18 MWt IGCC cogeneration demonstration project in Varnamo, Sweden. In 1992 the two companies formed a joint venture company, Bioflow LTD., to market the technology.

The Bioflow process includes dolomite injection to the gasifier and hot gas cleanup using ceramic candle filters.

The Varnamo demonstration plant uses waste wood chips. The gasification portion of the plant started up in 1993 and has operated favorably. The gas turbine combined cycle portion of the plant was started up using oil in June, 1994. In October, 1994, the plant integration of the gasification and combined cycle was scheduled to occur. The gas turbine is a 4.8 MWt unit supplied by European Gas Turbines.

In early 1994, Bioflow performed a feasibility study for a 60 MWt biomass IGCC plant to be located at a pulp mill in Finland. The results of the feasibility study are being evaluated.

The pressurized Bioflow technology is being evaluated against the atmospheric pressure TPS technology for application in a 30 MWt biomass gasification combined cycle demonstration plant in Brazil.

Bioflow will license the technology and be responsible for design from the biomass dryer to the inlet of the gas turbine. Ahlstrom will supply the gasifier. Bioflow will likely provide guarantees once the Varnamo demonstration plant has been successfully operated.

American Carbons, Inc. (ACI)

American Carbons, Inc's. (ACI) technology is pyrolytic conversion of carbonaceous materials into carbon products, oil, and gas. The process was developed by American Can Company from 1960 through 1978 and was called the Tech-Air process. ACI licensed the technology in 1979 and acquired all the rights to the technology in 1988. In the early 1980s ACI continued technology development and patented

process called GRPP Technology. A non-exclusive license was issued to the Kingsford Company in 1982. A license, exclusive for Hawaii and certain Caribbean locations, was granted to Carbon Group Limited in 1986.

The pyrolysis or carbonization process takes place in a vertical packed bed reactor which converts the biomass into a solid char (carbon), a low Btu heating value fuel gas and a single phase low molecular weight organic emulsion (oil). About 32 percent by weight of the feed is converted to char, about 20 percent to oil and the remainder to gas.

To provide only a fuel gas, two options are possible. The char can be recycled in the pyrolyzer and the liquid product can be gasified in a separate gasifier or the char and the liquid feed can be gasified in a separate gasifier.

In developing the pyrolysis process, many different pilot units up to 50 TPD capacity were built. A prototype pyrolyzer was operated from 1973 to 1979 and is reported to have had an 83 percent availability. A 7500 lb/hr (dry basis) unit for the production of a high volatile content carbon was built in California and operated from 1983 to 1989. The plant shut down in 1989 because it was ruined by a fire in the product storage area. Based on this experience ACI expects to be able to achieve a 90 percent availability factor.

ACI plans to limit a unit size to 12,500 lb/hr of bone dry feed (which will result in a pyrolyzer vessel plan area of about 55 square feet) and simply offer parallel trains to achieve the desired capacity. The feed would be dried to less than 20 percent moisture and the fuel gas should range from 125 to 150 Btu/scf.

ACI has formed a joint venture with ICF Kaiser International to commercialize and further develop the technology. The joint venture intends to provide process design, fabrication, procurement and construction of a complete gasification and power generating facility. They may also license the technology. ICF Kaiser is willing to provide process guarantees for the basic pyrolysis unit, but not to the broader full-scale gasification application.

1.2.4 Weyerhaeuser Visits to Gasification Facilities

The following gasification facilities were visited by Weyerhaeuser personnel:

- The dual 15 MWt atmospheric recirculating fluid bed gasifiers designed by TPS and built by Ansaldo in Greve-in-Chianti, Italy
- The 2 MWt atmospheric pilot facility at TPS in Studsvik, Sweden
- The VTT (Technical Research Center of Finland) pilot facilities in Espoo, Finland
- The 15 MWt internally recirculating pressurized fluid bed gasifier pilot facility built by Tampella-Enviropower and located in Tampere, Finland
- The pressurized steam dryer system pilot facility built by Imatron Voima Oy (IVO) and located at Jyvaskyla, Finland
- The 15 MWt pressurized externally recirculating fluid bed gasifier and integrated combined cycle commercial plant, built by Ahlstrom and operated by Bioflow in Varnamo, Sweden

Based on these plant visits and discussions, Weyerhaeuser identified some areas of primary importance to successful commercialization and operation of BGCC technology including:

- Materials handling - particularly feed systems for pressurized gasifiers and dryers. Operating availability of lockhopper or piston feeders is still questionable and the inert gas requirements of the lockhopper systems is an operating issue.
- Appropriate bed material (dolomite, limestone, etc.) for the recirculating systems that will both achieve the necessary "catalytic cracking" of the tars and maintain acceptable levels of carryover and attrition. Progress has been made and the concept has been proven, but optimum materials have not yet been found.
- For the hot gas cleanup designs, operating conditions or operating windows are currently being optimized that will achieve the necessary tar cracking without sintering, provide for removal of alkali metals, and protect the operation of both the hot gas filter and the gas turbine.
- Although recent experience with candle filters looks promising, long term operating results are as yet unavailable for biomass gasification systems.
- For the atmospheric systems in particular, the cracking and removal of organic compounds, principally naphtha, must be dealt with in a long term, acceptable manner.
- Acceptable and economic methods of dealing with the ammonia formed in the gasification process and its impact on gas turbine nitrogen oxides emissions need analysis. The approaches are greatly different between atmospheric and pressurized systems.
- Methods of handling mill load swings must be determined. Depending upon the design of the BGCC cogeneration plant, supplemental firing of the HRSG with biogas may be required to follow mill steam demand while keeping the gas turbine base loaded.
- Both flue gas and integrated steam drying technologies are being considered by the different suppliers of gasification systems. However, most of these suppliers would likely prefer to limit their scope of supply to the gasification, gas cleaning and turbine systems. The dryer integration will have a significant impact on BGCC economics.

The plant visits were conducted under secrecy agreements and therefore details of the plant tours can not be published. It was noted that based on the level of effort being expended on this technology, commercial operation of a BGCC plant should be achievable in two to three years.

1.2.5 Gasification Technology Selection

Upon completion of the evaluation of candidate gasification technologies, MTCI and ACI were eliminated from further consideration-MTCI because of the fact that Weyerhaeuser and DOE are already gaining experience with this technology through a black liquor gasification project also being implemented at the New Bern mill. The ACI technology was considered to be extremely interesting, but it did not clearly fit the criteria set forth for BGCC and the scale up to the size anticipated for the New Bern project was deemed to be a high risk at this time.

The team believed there was an insufficient basis for selecting among the remaining technologies. Consequently, it was decided to find out which technology suppliers would be willing to provide specific design information to proceed with the conceptual engineering and costing of the New Bern BGCC Demonstration Project. Each of the vendors was given a design basis and asked to respond with information.

Bioflow (Ahlstrom) said that they could not respond at this time because all their energies were focused on the Varnamo plant start up. FERCO advised that they had established a design/construct relationship with Zurn-Nepco; however Zurn-Nepco advised that their resources were directed at the Burlington demonstration project. Consequently, they offered to provide information directly to Weyerhaeuser at a later time which could be compared to the Phase I feasibility results. For the HTW and its own CFB

gasification process, Lurgi was only willing to provide an overall summary material balance and total estimated price for the gasification island.

Only Tampella and TPS agreed to closely interface with Stone & Webster and Weyerhaeuser in order to develop a detailed heat and material balance suitable for determining plant performance and a basis for preparing a reasonable capital cost estimate. As a result, these two technologies were utilized in the study, providing an excellent basis for comparing the benefits and issues of an atmospheric and a pressurized gasification system integrated with the needs of a bleached kraft market pulp mill.

1.3 Design Basis

1.3.1 Biomass Gasification Combined Cycle (BGCC) Cogeneration Plant

The New Bern Pulp Mill generates process steam and electricity using a black liquor recovery boiler, a power boiler, and an extraction backpressure steam turbine generator. The power boiler, although designed to burn mill residuals (rejected or waste biomass), is currently able to fire only oil as a result of emissions limitations. The power boiler is also referred to as a bark boiler or a hog-fuel boiler. Weyerhaeuser is considering life extending (modifying) the power boiler and retrofitting emission controls which would allow it to once again burn biomass. The BGCC cogeneration plant is an alternative to the bark boiler retrofit project (which is referred to in this report as the Base Case Mill).

A general Electric Frame 6B gas turbine was selected as the basis for the BGCC plant since a biomass gasifier firing the 6B gas turbine with a heat recovery steam generator (HRSG) is of the right size to meet the steam requirements of the mill following the completion of a fiber-line modernization project planned for start-up in late 1997.

With maximum throttle steam flow, the mill's extraction/backpressure steam turbine generates 29 MWe. The mill's electricity consumption is 34.5 MWe, so 5.6 MWe is purchased. The turbine extraction provides 155 psig process steam and the turbine exhaust supplies 55 psig process steam. The throttle steam conditions are 850 psig/825°F. Because of the backpressure design, if the mill need for 55 psig steam drops, either the throttle flow to the turbine must be reduced accordingly or the excess 55 psig steam must be vented. The practice is to decrease the throttle flow which results in less electric generation and increased outside power purchases. To eliminate this problem, a 10 MWe condensing steam turbine generator (with the same throttle conditions as the existing turbine) is included as part of the Base Case Mill (bark boiler retrofit project) and the BGCC retrofit project.

The pulp mill and associated saw mill produce approximately 129,000 bone dry tons (BDT)/year of biomass wastes. The BGCC project will require additional biomass feed which will be supplied from forest management thinnings and other sources which are discussed in detail in Section 3.

Table 1-3 provides the overall design basis for the BGCC plant. The major requirement as of June 1994 based on a predicted steam demand after fiber line modernization is that the BGCC plant reliably supply 156,000 lb/hr of 850 psig/825°F steam and 45,000 lb/hr of 155 psig saturated steam. The mill is planning to convert its existing once-through cooling system to a mechanical draft cooling tower. The cooling load of the BGCC plant will be added to the mill cooling water load and the incremental cooling tower cost included in the BGCC plant cost estimate. Deaerated boiler feed water will be provided to the BGCC plant from the existing mill turbine-driven boiler feed pumps. The analyses of boiler feedwater, process water and potable water which are available from the existing systems are given in Table 1-4. Wastewater streams will be treated in the existing mill wastewater treatment system. The mill

is planning to install a stripping system for gas streams containing trace amounts of volatile organic compounds. This system will also be available for BGCC plant use.

1.3.2 Ethanol Plant

Much of the residual biomass generated at the mill site is bark which is high in lignin and not a suitable feed to the ethanol plant. Therefore, the ethanol plant feed will be trucked in biomass (wood chips from forest thinnings and other sources discussed in Section 3). The ethanol plant overall design basis is given in Table 1-5. The plant is sized to process 1000 BDT per day of biomass. This feed still contains lignin which becomes a byproduct of the ethanol process. If the ethanol plant is sited with the Base Case Mill (refurbished bark boiler), the lignin will be sold as fuel. Since the Base Case Mill can only supply the mill process steam needs, the ethanol plant design considered here includes an oil-fired packaged boiler to satisfy its steam requirements.

The ethanol plant can also be included as part of a BGCC retrofit project. In that scenario, the BGCC plant would provide the ethanol plant steam needs in addition to replacing the bark fired boiler's steam supply. The ethanol plant lignin byproduct will be used as part of the BGCC plant feed.

Table 1-3: BGCC Plant Design Basis

Site Data

- Location: New Bern, North Carolina
- Elevation: 12 feet msl
- Wind Load: 110 mph
- Seismic Zone 1
- Pile foundations for major structures

Utilities

- Cooling tower with river water makeup
- Cooling water inlet temperature 90°F
- Demineralized (boiler feedwater) water available
- Process water available
- Potable water available

Other Infrastructure

- Primary and secondary wastewater treatment systems and condensate stripping systems are available

Power Island

- Existing pulp mill power complex includes a black liquor recovery boiler and a bark boiler which supply steam to a single extraction backpressure steam turbine. The BGCC plant will replace the bark boiler. The HRSG must provide the following steam to the pulp mill to meet the steam requirements of the mill following the completion of a fiber-line modification project planned for start-up in late 1997.

  156,000 lb/hr @ 850 psig/825°F
  45,000 lb/hr of 155 psig saturated

- BGCC plant will be based on a single General Electric Frame 6B gas turbine capable of firing either low Btu fuel gas or distillate oil; NO_x control approach to be determined

- Gas turbine performance at inlet air temperature 59°F, 60% relative humidity.

Table 1-3: BGCC Plant Design Basis (Cont)

Gasification Island

- Feed-mixture of harvesting and thinning residuals and sawmill waste

  TPS
  842 BD tons per day
  1,685 tons per day (wet basis)
  Tampella
  913 BD tons per day
  1826 tons per day (wet basis)

- Feed as received ultimate analysis (average)

	Weight %
Moisture	50.0
Carbon	25.1
Hydrogen	2.7
Nitrogen	0.1
Oxygen	20.1
Ash	2.0 (0.35% soluble, 1.65% acid insoluble)

- Feed HHV 8800 Btu/lb (dry basis)
- Feed bulk density, uncompacted 6.8 lb/cubic foot
- Feed as received size distribution
  Williams Classification

+29mm	7.9%
+22mm	14.6%
+16mm	23.0%
+10mm	26.3%
+5mm	15.9%
pan	12.3%

- Dryer to be designed for 55% moisture feed

Air Emissions Limits

- New Source Performance Standards (NSPS)

Sparing Philosophy

- Consistent with achieving high availability (~95%) (e.g., online spares for rotating and severe service equipment)

Sizing Philosophy

- Since there are only a few gas turbine offerings with biomass produced gas that provide acceptable guarantees based on a sound testing program, the plant size was forced to match the fuel needs of the turbine selected - the GE Frame 6B. This resulted in somewhat different feed mass flows for each BGCC alternative and the ethanol plant.

Table 1-4: Water Analyses from Existing Systems at New Bern Pulp Mill

	Potable Water	Process Water	Boiler Feedwater
pH	8.15	6.55	6.05
Specific Conductance, 25°C, UMHOS	560.	128.4	2.65
Alkalinity, "P" as $CACO_3$, ppm	0	0.4	0.4
Alkalinity, "M" as $CACO_3$, ppm	258.	22.4	2.0
Sulfur, Total, as SO_4, ppm	10.	18.05	0.5
Chloride, as CL, ppm	24.	12.1	0.5
Hardness, Total, as $CACO_3$, ppm	179.5	29.4	0.1
Calcium Hardness, Total, as $CACO_3$, ppm	106.	19.6	0.05
Magnesium Hardness, Total as $CACO_3$, ppm	73.	9.2	0.05
Copper, Total, as CU, ppm	0.05	0.05	0.005
Iron, Total, as FE, ppm	0.365	1.15	0.005
Sodium, as NA, ppm	55.5	12.75	0.055
Manganese, Total as MN, ppm	0.03	0.07	
Phosphate, Total, as PO_4, ppm	0.4	0.4	0.4
Phosphate, Total Inorganic, as PO_4, ppm	0.2	0.25	
Phosphate, Ortho- as PO_4, ppm	0.2	0.25	
Silica, Total, as SIO_2, ppm	25.5	8.0	0.05

Table 1-5: Advanced Biomass Cellulose to Ethanol Plant Design Basis

Feed Stock	Chipped harvesting and thinning residuals from southern pine plantations 1000 BDT 2083 tons per day (wet basis) **Composition** WT % Cellulose 18.4 Hemicellulose 11.75 Lignin 12.31 Sol. Solids/inerts 4.79 Insol. solids/inerts 0.75 Water 52.00 **Chip Size Distribution** % +29 mm 8.0 +22 mm 14.6 +16 mm 23.0 +10 mm 26.3 + 5 mm 15.9 ⩽ 5 mm 12.3
Product	Anhydrous fuel grade ethanol (undenatured) 79,000 gallons per day 26,860;000 gallons per year
By-products	Lignin based residual solids (stillage) 614 tons per day (45% moisture)
Chip Storage	21 days
Pretreatment	Proprietary Amoco dilute acid prehydrolysis reactor: Temperature 489°F Pressure 615 PSIA Conversions: Cellulose to glucose 10% Hemicellulose to Hexose and Xylose 90% Hemicellulose to Furfural: Grouped in soluble solid
Flash Tanks (F.T.)	First F.T. Insoluble Solids Conc. 30 WT% Second F.T. Insoluble Solids Conc. 33 WT% Residence Time 5 minutes First F.T. Pressure 24 PSIA Second F.T. Pressure 3 PSIA
Neutralization	Neutralizing Agent 17% Lime Slurry Residence Time 5 minutes Dosage: Over Lime to pH 7.5

Table 1-5: Advanced Biomass Cellulose to Ethanol Plant Design Basis (Cont)

Cellulase Enzyme	Origin		Purchased Commercial
	Broth Strength		175,000 FPU/litre
	Dosage		14.65 FPU/gm cellulose
	Storage		6 days
Simultaneous Saccharification and Fermentation (SSF)	Type		Continuous Stirred Tanks (Cascaded)
	Temperature		90°F
	pH		4
	Hold Time		170 hours
	Cellulose Conversion to EtoH		76.5%
	Xylose Conversion to EtoH		90%
	Mixing Power:	1st Fermenter	2.4 Hp/1000 Gal
		2nd Fermenter	2.4 Hp/1000 Gal
		3rd Fermenter	0.5 Hp/1000 Gal
		4th Fermenter	0.5 Hp/1000 Gal
		5th Fermenter	0.38 Hp/1000 Gal
		6th Fermenter	0.38 Hp/1000 Gal
		7th Fermenter	0.16 Hp/1000 Gal
		8th Fermenter	0.16 Hp/1000 Gal
		9th Fermenter	0.16 Hp/1000 Gal
		10th Fermenter	0.16 Hp/1000 Gal
	Carbon Dioxide Gas Scrubbing:		80% Recovery EtOH
	Nutrients:		Residual in Yeast Seed and Stillage Recycle
	Fusel Oil:		0.015 LB F.O./Lb EtOH
	Initial Yeast Population:		10MM cells/ml
Yeast Propagation	Yeast:		Proprietary (protoplast), Xylose and Hexose Uptake
	Duplication Time:		4 hours
	Propagation Type:		Batch
	Substrate:		Glucose at 2.5% Concentration
	Cell Yield:		0.55 gm Cells/gm Glucose
	Air Requirement:		14 gm/gm cell mass
	Mixing Power:		1.25 - 1.8 Hp/1000 Gal
	Propagation Time:		Day Tank 18 hours
			Seed Tank 20 hours
			Starter 24 hours
	Final Inoculation Volume:		3.5% of Fermenter
	Nutrients:		
	Anhydrous Ammonia		1 gm/L
	Phosphoric Acid		0.7 gm/L
	Corn Steep Liquor (45% DS)		10 gm/L
Distillation and Dehydration	Rectifying Column Product:		95.0 volume % Ethanol
	Anhydrous Product:		99.9 volume % Ethanol

Table 1-5: Advanced Biomass Cellulose to Ethanol Plant Design Basis (Cont)

Stillage Handling	Centrifugation:	
	Cake:	35% Solids
	Recovery:	64% of Solids
	Rotary Vacuum Filter:	
	Cake:	55% Solids
	Recovery:	92% of Solids
Utilities	Steam:	610 PSIG Sat'd 155 PSIG Sat'd
	Chilled Water:	
	Supply	45°F
	Return	65°F
	Cooling Water:	
	Supply	90°F
	Retu rn	110°F
Sparing Philosophy	Consistent with customary practice of alcohol industry; minimal sparing is acceptable, since plant interruptions can be tolerated without impacting overall availability.	

Section 2

Preliminary Design and Cost

At the start of the project, Stone & Webster requested design and cost information for the proposed Weyerhaeuser New Bern biomass gasification combined cycle plant (BGCC) from several gasifier vendors and design and requested cost information for an integrated ethanol-from-biomass plant from Amoco. All of the vendors were given the Basis of Design (Section 1.3) and asked to provide a complete preliminary design package. Only two gasification vendors (TPS and Tampella) responded with sufficient information. Consequently, only these technologies were evaluated.

Using the TPS, Tampella, and Amoco information, Stone & Webster developed system designs and cost estimates for three BGCC cases and two ethanol cases (integrated with BGCC and stand-alone). One of the BGCC cases is based on the TPS atmospheric gasification system, and two cases use the Tampella (EnviroPower) pressurized gasification system. All produce sufficient fuel gas to power a General Electric Company (GE) Frame 6B gas turbine. Each of the BGCC designs supplies 100 percent of the existing mill's power needs as well as excess power for sale to the area electric utility. In addition, process steam needs above that required by the recovery boiler are satisfied by the BGCC system. The ethanol plant integrated with the BGCC supplies lignin feed to the gasifier and the BGCC returns process steam to the ethanol process. In the stand-alone case, the lignin is sold as fuel or used in the existing bark boiler and an auxiliary boiler provides the ethanol plant process steam requirements.

Biomass gasification design packages provided by TPS and Tampella included process descriptions, heat and material balances, and installed equipment cost information, but did not supply base equipment costs for the gasification island which, therefore, required clarification and adjustment. The Amoco ethanol package included block flow diagrams, material balances, some kinetic data, and some stream property data. Amoco also provided the cost of the proprietary pretreatment "black box."

Stone & Webster worked closely with TPS, Tampella, and Amoco to develop a detailed process flow diagram and heat and material balance for the overall BGCC cogeneration plant and ethanol plant configurations. In-house process simulation software was used to confirm the vendor-provided heat and material balances for the gasifiers, gas coolers, and heat recovery steam generator (HRSG) systems. In addition, the fuel gas specifications and gas turbine performance data were submitted to GE for verification.

For the TPS system, Stone & Webster redesigned and prepared cost estimates for the gas cooling and scrubbing systems. Stone & Webster also sized and costed all of the non-proprietary equipment for the Amoco ethanol process. For both BGCC technologies and the ethanol plant, major equipment items in the material handling and power systems were sized by Stone & Webster and submitted to vendors for pricing. Most of the costs for the balance-of-plant systems and structures were estimated using factors except for major equipment items such as the cooling tower and flare.

The results of the design and cost estimating activities are presented in the following sections.

2.1 TPS Studsvik Biomass Gasification Combined Cycle Cogeneration Plant Design

The TPS system uses an atmospheric pressure gasification vessel to convert dried biomass into a low-Btu fuel gas. TPS believes that uncracked tars and hydrocarbons would foul the biogas cooler and condense in the biogas scrubber. Therefore, an additional tar cracker atmospheric vessel is employed downstream

of the gasifier to catalytically break down tars and heavy hydrocarbons into lower molecular weight compounds. Without this feature, the condensed tars would increase wastewater treatment requirements and reduce the carbon conversion efficiency of the plant. Because of the tar cracking vessel and large degree of gas cooling, the TPS process can use conventional gas cleaning equipment such as bag filters and scrubbers.

TPS was given the option of specifying the moisture content of the biomass feed to the gasifier and had originally decided upon a 10 weight percent feed moisture content. The project team, however, had concerns regarding the feasibility of drying wood chips of the specified size range to such a low moisture value. Since other vendors were recommending a 20 percent moisture content (by weight) basis, TPS was asked to provide a revised design based on 20 percent for the sake of consistency.

The original TPS design did not account for the fact that the New Bern mill would supply heated boiler feed water to the BGCC plant. Stone & Webster therefore redesigned the gas cooler and biogas water scrubber to account for the reduced requirements for low-level heat recovery. To be consistent with the TPS design, Stone & Webster designed the biogas water scrubber and biogas absorption tower as separate systems. Consolidating the two towers into one packed column tower could reduce capital cost and should be investigated prior to detailed design.

When firing low-Btu gas, the combined flow of fuel gas and combustion air would exceed the design limits of the gas turbine expander. Air is therefore bled from the compressor discharge to prevent surging. TPS had developed a cost-effective concept to let down the high pressure turbine extraction air for use in the gasifier and tar cracker. However, since additional development work was required to adapt the TPS integration scheme to the Frame 6B gas turbine, it was decided to use a conventional expander-compressor system. This equipment provides the 20 psig air for gasification and generates an additional 1.2 MW of electricity.

Alteratively, one could throttle the gas turbine compressor inlet guide vanes in order to eliminate the need for extraction air. In this design, gasification air requirements are provided by a separate compressor. This option was also investigated and is discussed within the performance section of this report (Section 2.3.2).

Due to the significant cooling of the biogas, more steam is generated by the TPS design BGCC plant than is required by the mill. The additional steam flow is utilized in the auxiliary steam turbine to produce about 2.9 MW of power. Consequently, the proposed standby 10 MW condensing steam turbine was oversized by about 3 MW.

System Description

A process flow diagram of the biomass gasification system for the TPS design is shown in Figure 2-1, a material balance is provided in Table 2-1, and an equipment list is provided in Table 2-2. Dried biomass from the dry fuel day bin is fed to the gasifier by the biomass feed, weigh hopper, conveyor system. This system is designed to function as two trains operating in parallel. Each line consists of a live bottom fuel bin with an extraction screw that doses the fuel onto a weigh belt conveyor. Since the gasifier operates at slight pressure, two pressurized rotary valves are required to prevent the backflow of combustible gases. Downstream of the rotary valves, a screw conveyor for each line feeds the fuel to the gasifier. Bed sand, used to initially charge the gasifier bed, is also fed manually to the gasifier on this conveyor system. Typically, the bed sand flow is zero during normal operating conditions.

The gasifier is a cylindrical refractory-lined steel vessel. It operates in two regimes; the lower part of the gasifier contains a "dense-phase" fluidized bed, while the upper part of the gasifier operates as a "fast" fluidized bed.

As biomass is fed to the gasifier, it immediately falls into the lower level dense bed. The dense-phase fluidized bed processes coarser fuel particles and provides sufficient residence time for the gasification reactions. Preheated primary air enters the gasifier near the base of the gasifier vessel and maintains fluidization of the dense bed material. Without the dense bed, large particles would fall directly onto the air distributor plate and cause clinkering. Secondary air is added above the dense bed to increase the upward gas velocity to produce a "fast" fluidized bed. In this phase, the fuel is fully pyrolyzed and gasified by the combined action of heat, air and gas components. Gas exiting the top of the gasifier enters the primary and secondary solids separation cyclones. The separated particles are recirculated back to the dense bed in order to maximize carbon conversion. Ash is continually drained from the bottom of the vessel. Rotary valves in the ash removal system are required to prevent gas leakage. The bottom ash is cooled by two gasifier ash cooling screw conveyors operating in parallel.

Hot fuel gas from the secondary cyclone enters the fluidized bed tar cracker vessel. The main function of this vessel is to crack or convert tars and heavy hydrocarbons into more volatile organics. If not cracked, these tars would foul the biogas cooler, plug the fabric filter, and increase wastewater loads from the scrubber. Dolomite, a catalyst, is added to the bed to reduce nitrogen compounds to ammonia which can be easily removed by the downstream towers. The dolomite feed system consists of a single bin with discharge screw, two rotary feeders, and shutoff valve.

Unlike the gasifier, the tar cracker operates as a circulating fluidized bed without a dense bed at the bottom. The biogas is introduced at the bottom of the vessel to provide for good contact between the product gas and dolomite bed material. Tar conversion is dependent on the fluidizing gas velocity, temperature, and solid-gas contact time. The higher operating temperature of the cracker also serves to gasify any carbon particles remaining in the fuel gas. Gas exiting the top of the cracker enters the primary and secondary solids separation cyclones. The separated particles are recirculated back to the cracker. Because the dolomite is continuously broken down to finer particles which exit with the fuel gas, a continuous supply of fresh dolomite is required.

High efficiency cyclones are important to the operation of both the gasifier and tar cracker. In the case of the gasifier, the cyclones maximize carbon conversion and minimize ash transport to the tar cracker. In the tar cracker, the cyclones reduce the loss of dolomite catalyst and impact the size distribution of dust in the fuel gas.

Product gas from the tar cracker cyclones is cooled from 1,688°F to 347°F in the biogas cooler. The biogas cooler consists of an economizer section and an evaporator section. Boiler feed water entering the economizer at 303°F is heated to 527°F. The economized water is combined with economized water from the HRSG and fed to the biogas cooler evaporator to produce high pressure saturated steam (880 psig, 533°F). A continuous blowdown of approximately one percent of the steam flow is taken from the biogas cooler steam drum and sent to the blowdown flash tank. This controls the accumulation of impurities in the steam drum.

Particulate matter entrained in the product gas is removed by bag filters. As the biogas is cooled, alkali metals condense and attach to particulate matter in the gas stream. These compounds are subsequently removed by the filter. A nitrogen pulse is used to periodically shake the captured ash off the fabric filters. Filter ash collects at the bottom of the filter vessel and is discharged by a screw conveyor and a multiple rotary valve lock system.

After dust removal, the gas is cooled to 100°F by a direct cooling condensing scrubber. Water and some residual hydrocarbons are condensed and removed from the product gas. A significant amount of ammonia is also removed by the condensing water. The gas is then washed in the biogas absorption tower by a recirculating dilute sulfuric acid stream for further ammonia removal. The combined activity of the scrubber and absorption tower provide for over 95 percent ammonia removal. The removal of ammonia prior to combustion of the biogas in the gas turbine precludes the need for selective catalytic reduction of nitrogen oxides (NO_x) in the HRSG. The purge streams from both towers are sent to the mill's existing wastewater treatment system.

Biogas from the absorption tower passes through a knockout drum to remove entrained water prior to compression in the gas booster compressor. The gas is compressed from atmospheric pressure to the required inlet pressure of the gas turbine fuel skid (238 psig).

Atmospheric air, compressed by the gas turbine compressor, is combined with biogas in the gas turbine combustor. The hot gases from combustion are expanded in the turbine section to produce about 43.0 MW of power. The combustion system is designed to fire both biogas and backup No. 2 distillate oil. The gas turbine package includes a lubrication and hydraulic oil system, generator package, fire detection and suppression system, and control system.

The extraction air from the gas turbine compressor at 148 psig and 659°F is expanded in the expander section of the expander/compressor/generator. The expansion of the extraction air provides sufficient shaft energy to compress an additional amount of air to gasification requirements and to generate 1.2 MW of power in the generator. The combined air flow is heated in the HRSG and sent to the gasification island.

Hot exhaust gas at 1,010°F from the gas turbine is ducted to the inlet of the HRSG. Although the HRSG direct burner system is designed to fire low-Btu gas for improved control and operability, the amount of supplemental firing is normally zero. The HRSG consists of two pressure levels, 155 psig and 850 psig. Low pressure (LP) boiler feedwater from the mill is heated to 350°F in the LP economizer section. This water is then evaporated at 155 psig and 368°F in the LP evaporator section and sent to the mill for process uses. High pressure (HP) feedwater from the mill is fed to the HP economizer in the HRSG and to the HP economizer in the biogas cooler and heated to 509°F. A portion of the heated water exiting the HRSG HP economizer is sent to the biogas cooler, combined with biogas cooler economized water and evaporated. The remaining HRSG economized water is evaporated in the HP evaporator section of the HRSG. The saturated steam flow from the biogas cooler and the HRSG HP evaporator are combined and superheated in the HRSG HP superheater section to 825°F. About 26,000 lb/hr of superheated steam is sent to the auxiliary condensing steam turbine to produce 2.9 MW of power. The remaining 156,000 lb/hr is sent to the mill's existing steam turbine.

A continuous blowdown of about one percent of the steam flow is taken from the HRSG steam drums and the biogas cooler steam drum. Blow down from the two high pressure blow down tanks are let down to 155 psig. The resulting steam from the drums are sent to the 155 psig steam header. The remaining water at 155 psig is combined with blowdown from the low pressure steam drum and letdown in the low pressure blow-off tank. Steam is released to the atmosphere and residual water is pumped to the cooling tower (refer to cooling tower description in Section 2.5.1).

The flue gas leaving the HRSG at 464°F is ducted to the biomass dryer (refer to material handling description in Section 2.4). The HRSG is provided with a stack for operation with backup distillate oil when the gasifier is out of service. A continuous emissions monitoring system is located in the ductwork upstream of the branch connections to the HRSG stack and dryer duct.

Table 2-1: Material Balance - TPS BGCC (Flue Gas Dryer)

NODE	1	2	3	4	5	6	7	8	9	10
STREAM	BIOMASS FEED TO DRYER	DRIED BIOMASS TO GASIFIER	ASH FROM GASIFIER	BED SAND FEED	DOLOMITE FEED	BIOGAS TO COOLER	BIOGAS TO FILTER	ASH FROM FILTER	FILTER CLEANING N2	BIOGAS TO SCRUBBER
PRESSURE (PSIG)	0	0	0	0	0	5	3	0	50	3
TEMPERATURE (F)	59	140	392	59	59	1,688	347	347	59	347
TOTAL FLOW (LB/HR)	140,400	87,800	2,200	0	2,300	188,800	188,800	3,200	700	186,300
DRY FLOW (LB/HR)	70,200	70,200	--	--	--	--	--	--	--	--

NODE	11	12	13	14	15	16	17	18	19	20
STREAM	COND. FROM SCRUBBER	ACID WATER TO ABS. TWR.	ABS. TWR. BLEED	BIOGAS TO GAS COMPRESSOR	BIOGAS TO DUCT FIRING	BIOGAS TO G.T.	AIR TO G.T.	EXTRACTION AIR FROM G.T.	G.T. EXHAUST TO HRSG	FLUEGAS TO DRYER
PRESSURE (PSIG)	0	30	15	1.5	1.5	245	0		1	1
TEMPERATURE (F)	110	90	100	100	100	311	59		1,010	464
TOTAL FLOW (LB/HR)	11,400	8,200	8,500	174,600	0	174,600	1,081,800		1,193,500	1,193,500
DRY FLOW (LB/HR)	--			--	--	--	--		--	--

NODE	21	22	23	24	25	26	27	28	29	30
STREAM	FLUEGAS TO STACK	AIR FROM COMPRESSOR	AIR FROM EXPANDER	GASIFICATION AIR TO AIR HEATER	GASIFICATION AIR TO GASIFIER	BFW TO LP ECONOMIZER	LP STEAM TO MILL	HP BFW FROM MILL	BFW TO BIOGAS COOLER	BFW TO HP ECONOMIZER
PRESSURE (PSIG)	0					165	155	900	900	900
TEMPERATURE (F)	230					303	368	303	303	303
TOTAL FLOW (LB/HR)	1,246,100					45,500	45,000	183,800	66,500	117,300
DRY FLOW (LB/HR)	--	--	--	--	--	--	--		--	--

NODE	31	32	33	34	35	36	37	38	39	
STREAM	ECON. H2O TO BIOGAS COOLER	STEAM FROM BIOGAS COOLER	ECON. H2O TO HP EVAP.	STEAM FROM HP EVAP.	HP SH STEAM FROM HRSG	HP STEAM TO MILL	HP STEAM TO AUX. STEAM TURBIINE	HP MILL STEAM TO STEAM TURBIINE	CONDEN. FROM STEAM TURBIINE	
PRESSURE (PSIG)	890	880	890	880	850	850	850	850	2	
TEMPERATURE (F)	527	533	527	533	825	825	825	825	140	
TOTAL FLOW (LB/HR)	42,400	107,800	74,900	74,200	182,000	156,000	26,000	0	26,000	
DRY FLOW (LB/HR)	--	--	--	--	--	--	--	--		

NOTE:
1. BASED ON TPS PRELIMINARY MASS AND ENERGY BALANCE TRANSMITTED 9/21/94. ADJUSTED FOR GE GAS TURBINE PERFORMANCE PROVIDED BY GE ON NOV. 22, 1994.
2. REFERENCE DRAWING NO. 04996.00-DJ-0001-1.

Table 2-1: Material Balance - TPS BGCC (Flue Gas Dryer)

NODE	5	10	14	16	19	20	21
STREAM	BIOGAS TO COOLER	BIOGAS TO SCRUBBER	BIOGAS TO GAS COMPRESSOR	BIOGAS TO G.T.	G.T. EXHAUST TO HRSG	FLUEGAS TO DRYER	FLUEGAS TO STACK
PRESSURE (PSIG)	5	3	2	1	1	1	0
TEMPERATURE (F)	1,688	347	100	245	1,010	464	230
TOTAL FLOW (LB/HR)	188,800	186,300	174,600	174,600	1,193,500	1,193,500	1,246,100
COMPONENTS							
C2H6 (VOL%)	0.04%	0.04%	0.04%	0.04%	0.00%	0.00%	0.00%
C2H4 (VOL%)	1.13%	1.13%	1.25%	1.25%	0.00%	0.00%	0.00%
CH4 (VOL%)	3.08%	3.08%	3.39%	3.39%	0.00%	0.00%	0.00%
CO (VOL%)	19.47%	19.47%	21.42%	21.42%	0.00%	0.00%	0.00%
CO2 (VOL%)	11.46%	11.46%	12.61%	12.61%	6.90%	6.90%	6.61%
H2 (VOL%)	15.15%	15.15%	16.67%	16.67%	0.00%	0.00%	0.00%
H2O (VOL%)	13.57%	13.57%	5.02%	5.02%	6.20%	6.20%	10.16%
N2 (VOL%)	35.82%	35.82%	39.59%	39.59%	74.10%	74.10%	70.95%
O2 (VOL%)	0.00%	0.00%	0.00%	0.00%	12.80%	12.80%	12.26%
NH3 (PPMV)	2800	2800	80	80	0	0	0
H2S (PPMV)	0	0	0	0	0	0	0
NOx (PPMVD)(15%O2)	0	0	0	0	25	25	24
CO (PPMV)	0	0	0	0	10	10	10
UNH (PPMV)	0	0	0	0	7	7	7
VOC (PPMWT)	0	0	0	0	0	0	118
DUST (PPMWT)	0	0	0	0	4	4	42
TOTAL	100.00%	100.00%	100.00%	100.00%	100.00%	100.00%	100.00%

NOTE:
1. BASED ON TPS PRELIMINARY MASS AND ENERGY BALANCE TRANSMITTED 9/21/94. ADJUSTED FOR GE GAS TURBINE PERFORMANCE PROVIDED BY GE ON NOV. 22, 1994.
2. REFERENCE DRAWING NO. 04996.00-DJ-0001-1.

Table 2-2: Equipment List - TPS BGCC (Flue Gas Dryer)

Item No.	Description	Qty	Remarks
A-201	Biogas Water Scrubber	1	Tray Tower 13'4" I.D. x 48'2", Material-316 SS
A-202	Biogas Absorption Tower	1	Tray Tower 13'4" I.D. x 48'2" Material = 316 SS
G-201	Gas Turbine Frame 6B	1	43.0 MW
G-202	Expander/compressor/generator	1	Includes generator for 1.2 MW
G-206	Auxiliary Steam Turbine	1	13 MW
G-207	Bag Filter	1	Sized by TPS
L-202	Circulating Fluidized Bed Gasifier	1	Sized by TPS
L-205	Tar Cracker	1	Sized by TPS
M-203	Gasifier Primary Cyclone	1	Sized by TPS
M-204	Gasifier Secondary Cyclone	1	Sized by TPS
M-206	Tar Cracker Primary Cyclone	1	Sized by TPS
M-207	Tar Cracker Secondary Cyclone	1	Sized by TPS
M-208	Biogas Knock-out Drum	1	5'-0" Diameter, 15'-0" Length, Material = 316 SS
M-212	Biogas Cooler Continuous Blowdown Tank*	1	5'-2" x 0'-6" 175 psig design (Vertical)
M-213	HRSG Continuous Blowdown Tank*	1	4'-10" x 0'-6" 175 psig design (Vertical)
M-214	Blowoff Tank*	1	4'-0" x 1'-0" atmospheric design
M-220	Bed Sand Storage Hopper	1	Sized by TPS
P-201 A/B	Blowoff Transfer Pump*	2	3.8 gpm DELTA P=50 psi
P-202A/B	Condensate Pump*	2	200 gpm at 90 psig
P-210A/B	Biogas Water Scrubber Recycle Pump	2	3,000 gpm, head=30 psi, material=rubber lined CS
P-211A/B	Biogas Absorber Recycle Pump	2	3,000 gpm, head=30 psi, material=rubber lined CS
R-201	Gas Booster Compressor	1	10.4 MW
T-201 A,B, C,D	Biomass Dryer	4	Flue gas dryer to 20% moisture
T-202	Biogas Cooler	1	98 mmBtu/hr Steam generator, HRSG

Table 2-2: Equipment List - TPS BGCC (Flue Gas Dryer) continued

Item No.	Description	Qty	Remarks
T-205	HRSG	1	Two pressure level system (850 psig & 155 psig)
T-206	Auxiliary Steam Turbine Condenser	1	130.5 mmBtu/hr, 19,900 sq ft incl. ejector package and two mechanical vacuum pumps
T-211	Biogas Water Scrubber Cooler	1	22 mmBtu/hr Materials = Tubes: 316 SS; Shell: CS
W-204A/B	Gasifier Ash Cooling Screw Conveyor	2	Sized by TPS
W-205	Biogas Filter Ash Screw Conveyor	1	Sized by TPS
W-206A/B	Gasifier Ash System	2	Sized by TPS
W-207	Filter Ash System	1	Sized by TPS
W-211	Dolomite Feed Weigh Hopper Conveyor System	1	Sized by TPS
W-213A/B	Biomass Feed Weigh Hopper Conveyor System	2	Sized by TPS

*Not shown on PFD

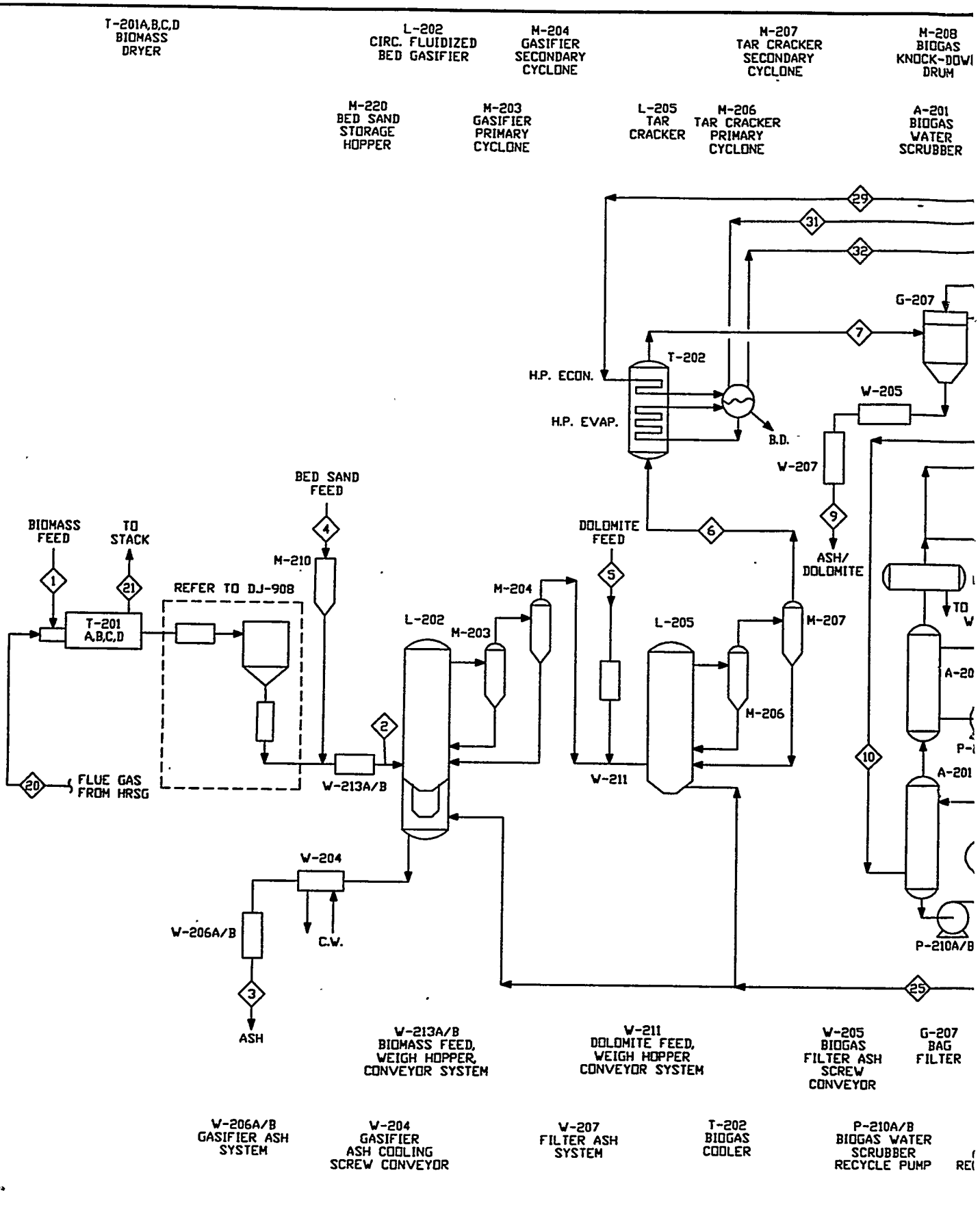

PLOT 2/13

WEYDJ02

ISSUE	DESCRIPTION	CHKD	CORRECT	ISSUE	DESCRIPTION	CHKD	CORRECT	ISSUE	DESCRIPTIO
PC ARCH CIVIL CONC STL L&P INST MD	P.S. S.A. FAC ELEC LTG MATL			PC ARCH CIVIL CONC STL L&P INST MD	P.S. S.A. FAC ELEC LTG MATL			PC ARCH CIVIL CONC STL	

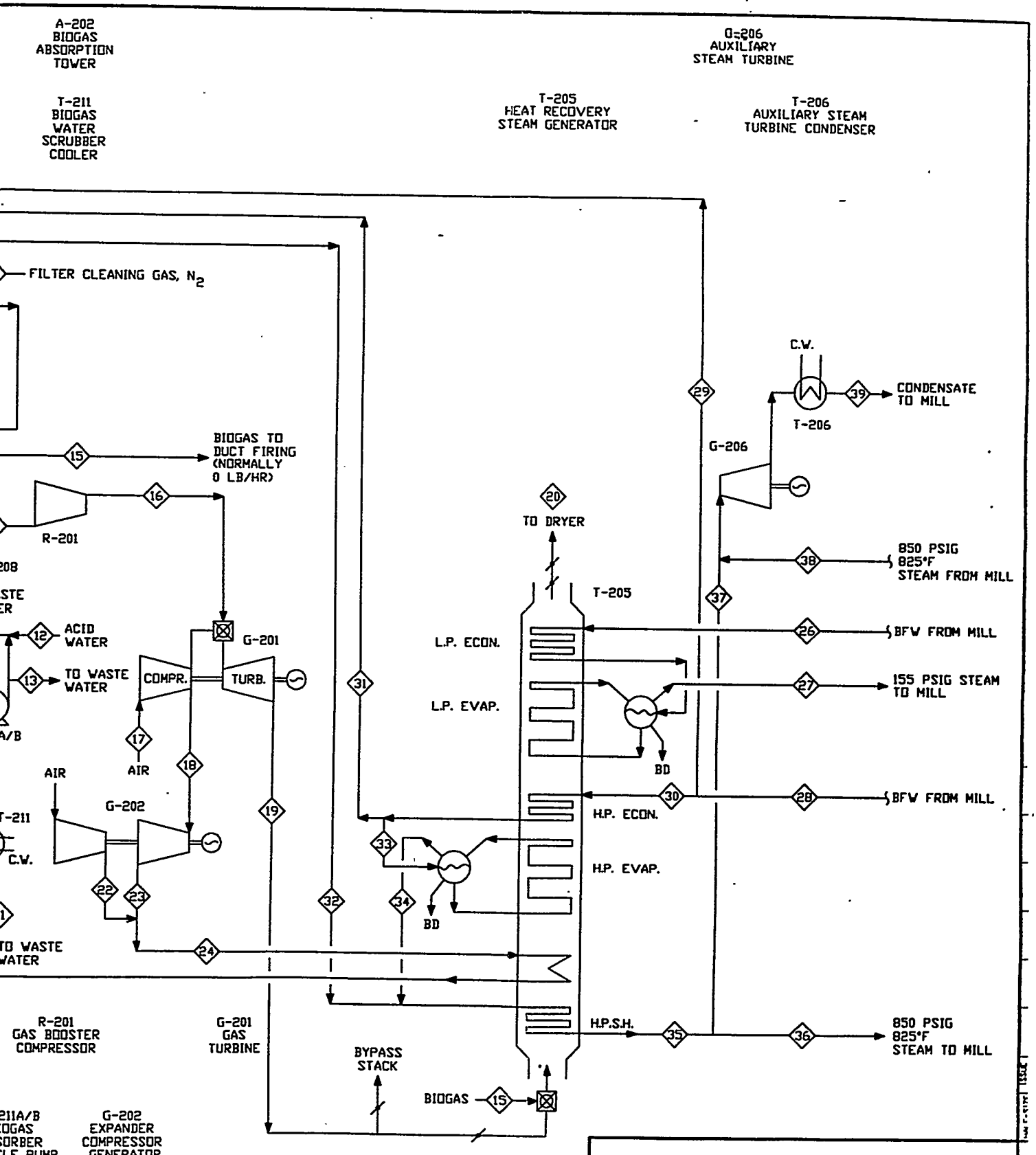

Figure 2-1
BGCC Retrofit
BGCC - Process Flow Diagram
T.P.S (Flue Gas Dryer)

DRAWING NUMBER 04996.00-DJ-0002-1

NOV. 1994

DESIGNED BY: MJB DRAWN BY: LEC

DESIGN CHK'D BY: CHK'D BY:

AREAS | LEVELS | WORK PKG

2.2 Tampella Biomass Gasification Combined Cycle Cogeneration Plant Design

The Tampella system features a pressurized gasification vessel to convert biomass into a low Btu fuel gas. The main advantage of the pressurized system is that it generates a fuel gas at a pressure sufficient to enter the gas turbine directly, therefore avoiding the need for a fuel gas compressor. The Tampella system employs a hot gas cleaning system which allows a large portion of the sensible heat in the fuel gas to be utilized by the gas turbine. Hot gas cleanup also reduces the gas cooling equipment duty and reduces the amount of wastewater produced. To meet gas turbine fuel quality requirements, the gas must be cooled to a temperature low enough to condense alkali vapors onto particulate matter for removal in the hot gas filter. This is accomplished in the biogas cooler by cooling the gas to 1,020°F.

Tampella provided two design options for the drying of the biomass. In one case, flue gas from the HRSG dries the wet biomass feed to 20 percent (by weight) moisture. The other case uses steam raised in the HRSG for use in a steam dryer. In this option, the HRSG must be supplementary fired to produce the additional steam requirement. Both Tampella options are described below with the major differences being noted.

The Steam Dryer Case requires slightly superheated, medium pressure steam for use in the dryer. A medium pressure superheater section was therefore added to the HRSG. Since the dryer steam pressure requirement was only slightly higher than that for the mill process steam, the mill process steam was generated along with the steam dryer steam and then let down and desuperheated to meet the mill requirements.

Since the Tampella design does not allow for ammonia control prior to the gas turbine, an SCR system was added to the HRSG in both Tampella designs.

System Description

Process flow diagrams for the Tampella flue gas dryer and steam dryer cases are shown in Figure 2-2 and Figure 2-3. Material balances are provided in Table 2-3 and 2-4. Equipment lists for each case are provided in Tables 2-5 and 2-6. Dried biomass (20 percent moisture) is fed to the gasifier through three parallel trains of weigh hoppers, lock hoppers and screw feeder systems. Dolomite is fed to the gasifier using a single weigh hopper, lock hopper system. Nitrogen is used for lock hopper pressurization. Steam and air are used as the bed fluidizing agent.

In the fluidized bed, biomass carbon reacts with air and steam at approximately 1,625°F. The operating pressure is 260 psig. High pressure superheated steam (850 psig, 825°F) from the HRSG is let down to 375 psig and fed to the gasifier vessel. The fluidizing medium of steam and air are fed into the gasifier via a distributor plate at the bottom of the bed. The gasifier is a spouting bed design which provides high internal circulation rates and thorough mixing of the bed. This feature results in longer residence times and higher carbon conversion. Longer residence times and high operating temperatures also serve to minimize the formation of tars and ammonia.

Inert materials such as sand, stones, ash and dolomite collect at the bottom of the gasification vessel. The bed depth height is maintained by the bottom ash discharge system. This system consists of a water-cooled screw conveyor and a depressurizing lock-hopper system.

Fines, ash, and other particulates are removed from the fuel gas in a single cyclone system. The collected solids are returned to the base of the gasification vessel to ensure high carbon conversion. The product

gas (consisting of carbon monoxide, carbon dioxide, methane, hydrogen, water vapor, and small amounts of tars and ammonia) is sent to the gas conditioning system.

The raw biogas from the gasifier is cooled from 1,625°F to 1,020°F in the biogas cooler by evaporating high pressure economized water (890 psig, 509°F) to high pressure saturated steam (880 psig, 533°F). A continuous blowdown of approximately one percent of the steam flow is taken from the biogas cooler steam drum.

Particulate matter in the product gas is removed by the high temperature high pressure (HTHP) filter. The filter is composed of numerous ceramic candles. As the biogas is cooled, alkali metals condense and attach to particulate in the gas stream and are subsequently removed by the filter. High pressure heated nitrogen is used to clean the filter elements on line. Nitrogen from the nitrogen system is stored at 565 psig in the cleaning gas tank. The gas is maintained at approximately 400°F with steam lines to minimize thermal stresses in the ceramic candles. A backflow of nitrogen is pulsed to each of the candle filters to remove the accumulated filter cake. The filter ash collects at the bottom of the filter vessel and is removed by the filter ash removal system. The ash is transported in a jacketed screw conveyor. Cooling water cools the ash to 450°F. The filter ash is depressurized in the ash/dolomite surge/lock hopper system and pneumatically conveyed to the filter ash silo.

Clean fuel gas is sent to the gas turbine combustor and mixed with combustion air from the gas turbine compressor. The hot combustion gases are expanded in the turbine section to produce about 42.8 MW of power (42.2 MW in the Steam Dryer Case). The gas turbine is designed to fire both biogas and No. 2 distillate oil. The system includes a lubrication and hydraulic oil system, generator package, fire detection and suppression system, and control system. The hot exhaust gases exit the gas turbine at 1,018°F and are ducted to the HRSG.

When firing low-Btu gas, a portion of the compressed air flow must be bled from the air compressor discharge to avoid surging in the turbine expander section. The extraction air is utilized in the gasifier. A booster compressor is used to compress the extraction air from 157 psig to 345 psig in order to meet the required feed pressure of the gasifier. The gas turbine extraction air is cooled in a series of heat exchangers prior to compression by the booster compressor. The first heat exchanger is regenerative and also heats the air after compression before it enters the gasifier.

The HRSG is provided with a duct burner system designed to deliver low-Btu gas. In the flue gas dryer case, the amount of supplemental firing is normally zero. The duct burner, however, is designed to fire 20 percent of the HRSG heat input for improved control and operability. In the steam dryer case, approximately 20,000 lb/hr of biogas is fed to the HRSG duct burners to generate the additional steam required by the dryer.

The HRSG generates steam at two pressure levels, 155 psig (203 psig for the steam dryer case) and 850 psig. In the flue gas dryer case, LP boiler feedwater from the mill is heated to 350°F in the LP economizer section and evaporated at 155 psig in the LP evaporator section and sent to the mill. In the steam dryer case, superheated steam at 203 psig and 428°F is generated for the dryer. A portion of the saturated steam flow is let down and desuperheated to 155 psig for process use in the mill. In both cases, high pressure feedwater from the mill is fed to the HP economizer and heated to 509°F. A portion of this flow is sent to the biogas cooler where it is evaporated. The remainder is evaporated in the HP evaporator section of the HRSG. The two HP saturated steam flows are combined and superheated to 825°F in the HP superheater section. A small portion of this flow is sent to the gasifier while the remainder is sent to the existing mill steam turbine.

A continuous blowdown of one percent of the steam flow is taken from the two HRSG steam drums and the biogas cooler steam drum. Blowdown from the two high pressure blowdown tanks are let down to 155 psig. The resulting steam from the drums is sent to the 155 psig steam header. The remaining water at 155 psig is combined with blowdown from the low pressure HRSG steam drum and letdown in the low pressure blow-off tank. Steam is released to the environment and residual water is pumped to the cooling tower.

For the flue gas dryer design, the exhaust gases leaving the HRSG at 471°F are ducted to the biomass dryer (refer to material handling description in Section 2.4). For the steam dryer case the flue gas exits the HRSG at 342°F and is discharged through the HRSG stack.

In the flue gas dryer design, a continuous emissions monitor is located in the HRSG discharge ductwork upstream of branch connections to the biomass dryer and to the HRSG stack. In this case, the HRSG stack is used when the gasifier is out of service and the gas turbine fires distillate oil. For the steam dryer design, the continuous emissions monitor is located in the HRSG stack.

Table 2-3: Material Balance - Tampella BGCC (Flue Gas Dryer)

NODE	1	2	3	4	5	6	7	8	9	10
STREAM	BIOMASS FEED TO DRYER	DRIED BIOMASS TO GASIFIER	DOLOMITE FEED	N2 FEED TO GASIFIER	ASH FROM GASIFIER	BIOGAS TO COOLER	BIOGAS TO FILTER	FILTER CLEANING N2	ASH FROM FILTER	BIOGAS TO G.T.
PRESSURE (PSIG)	0	280	280	565	0	273	268	565	0	260
TEMPERATURE (F)	59	140	59	59	450	1,625	1,020	400	450	1,020
TOTAL FLOW (LB/HR)	152,200	95,200	400	5,600	3,200	212,300	212,300	800	1,100	212,000
DRY FLOW (LB/HR)	76,100	76,100	400	--	--	--	--	--	--	--
NODE	11	12	13	14	15	16	17	18	19	20
STREAM	BIOGAS TO DUCT FIRING	AIR TO G.T.	AIR TO BOOSTER COMPRESSOR	G.T. EXHAUST TO DUCT BURNER	EXHAUST GAS TO HRSG	FLUE GAS TO DRYER	FLUE GAS TO STACK	COMPR. AIR TO GASIFIER	BFW TO LP ECONOMIZER	LP STEAM TO MILL
PRESSURE (PSIG)	260	0	157	1	1	0	0	345	165	155
TEMPERATURE (F)	1,020	59	662	1,018	1,018	471	233	650	303	368
TOTAL FLOW (LB/HR)	0	1,082,300	112,500	1,181,800	1,181,800	1,182,050	1,239,050	112,500	45,500	45,000
DRY FLOW (LB/HR)	--	--	--	--	--	--	--	--	--	--
NODE	21	22	23	24	25	26	27	28	29	
STREAM	BFW TO HP ECONOMIZER	ECON. H2O TO BIOGAS COOLER	STEAM FROM BIOGAS COOLER	ECON. H20 TO HP EVAP.	STEAM FROM HP EVAP.	STEAM FROM HP SUPERHEATER	SH STEAM TO GASIFIER	SH STEAM TO MILL	AQ. AMMONNIA TO SCR	
PRESSURE (PSIG)	900	890	880	890	880	880	375	850	50	
TEMPERATURE (F)	303	509	533	509	533	533	825	825	59	
TOTAL FLOW (LB/HR)	159,300	69,600	68,900	89,700	68,900	157,800	1,800	156,000	250	
DRY FLOW (LB/HR)	--	--	--	--	--	--	--	--	--	

NOTE:
1. BASED ON TAMPELLA PRELIMINARY MASS AND ENERGY BALANCE TRANSMITTED 10/21/94. ADJUSTED FOR GE GAS TURBINE PERFORMANCE PROVIDED BY GE ON NOV. 22, 1994.
2. REFERENCE DRAWING NO. 04996.00-DJ-0003-1.

Table 2-3: Material Balance - Tampella BGCC (Flue Gas Dryer)

NODE	6	10	14	16	17
STREAM	BIOGAS TO COOLER	BIOGAS TO G.T.	G.T. EXHAUST	FLUE GAS TO DRYER	FLUE GAS TO STACK
PRESSURE (PSIG)	273	260	1	0	0
TEMPERATURE (F)	1,625	1,020	1,018	471	233
TOTAL FLOW (LB/HR)	212,300	212,000	1,181,800	1,182,050	1,239,050
COMPONENTS					
C2H6 (VOL%)	0.02%	0.02%	0.00%	0.00%	0.00%
C2H4 (VOL%)	0.69%	0.69%	0.00%	0.00%	0.00%
CH4 (VOL%)	7.50%	7.50%	0.00%	0.00%	0.00%
CO (VOL%)	12.30%	12.30%	0.00%	0.00%	0.00%
CO2 (VOL%)	15.90%	15.90%	7.28%	7.28%	6.94%
H2 (VOL%)	8.50%	8.50%	0.00%	0.00%	0.00%
H2O (VOL%)	14.30%	14.30%	7.69%	7.69%	11.94%
N2 (VOL%)	40.70%	40.70%	73.14%	73.16%	69.79%
O2 (VOL%)	0.00%	0.00%	11.87%	11.87%	11.32%
NH3 (PPMV)	900	900	0	0	0
H2S (PPMV)			0	0	0
NOx (PPMVD)(15%O2)			133	13	19
CO (PPMVD)			10	10	15
UNH (PPMV)			7	7	10
VOC (PPMWT)			0	0	0
DUST (PPMWT)			4	4	65
TOTAL	100.00%	100.00%	100.00%	100.00%	100.00%

NOTE:
1. BASED ON TAMPELLA PRELIMINARY MASS AND ENERGY BALANCE TRANSMITTED 10/21/94. ADJUSTED FOR GE GAS TURBINE PERFORMANCE PROVIDED BY GE ON NOV. 22, 1994.
2. REFERENCE DRAWING NO. 04996.00-DJ-0003-1.

Table 2-4: Material Balance - Tampella BGCC (Steam Dryer)

NODE	1	2	3	4	5	6	7	8	9	10
STREAM	BIOMASS FEED TO DRYER	DRIED BIOMASS TO GASIFIER	DOLOMITE FEED	N2 FEED TO GASIFIER	ASH FROM GASIFIER	BIOGAS TO COOLER	BIOGAS TO FILTER	FILTER CLEANING N2	ASH FROM FILTER	BIOGAS TO G.T.
PRESSURE (PSIG)	0	280	280	565	0	273	268	565	0	260
TEMPERATURE (F)	59	212	59	59	450	1,625	1,020	400	450	1,020
TOTAL FLOW (LB/HR)	165,700	103,500	440	6,000	3,440	230,850	230,850	900	1,500	210,250
DRY FLOW (LB/HR)	82,850	82,850	440	--	--	--	--	--	--	--
NODE	11	12	13	14	15	16	17	18	19	20
STREAM	BIOGAS TO DUCT FIRING	AIR TO G.T.	AIR TO BOOSTER COMPRESSOR	G.T. EXHAUST TO DUCT BURNER	EXHAUST GAS TO HRSG	FLUE GAS TO TO STACK	COMPR. AIR TO GASIFIER	BFW TO LP ECONOMIZER	BFW TO LP DESUPERHEATER	BFW TO LP ECONOMIZER
PRESSURE (PSIG)	260	0	155	1	1	0	345.0	223	223	233
TEMPERATURE (F)	1,020	59	659	1,019	1,135	342	650	303	303	303
TOTAL FLOW (LB/HR)	20,000	1,082,700	122,450	1,170,500	1,190,500	1,190,750	122,450	135,000	200	134,800
DRY FLOW (LB/HR)	--	--	--	--	--	--	--	--	--	--
NODE	21	22	23	24	25	26	27	28	29	30
STREAM	LP STEAM FROM EVAP.	LP STEAM TO SUPERHEATER	LP STEAM TO MILL	LP STEAM TO DRYER	DRYER CONDENSATE	LP STEAM FROM DRYER	BFW TO HP ECONOMIZER	ECON. H2O TO BIOGAS COOLER	STEAM FROM BIOGAS COOLER	ECON. H2O TO HP EVAP
PRESSURE (PSIG)	223	223	155	203	43	43	900	990	880	890
TEMPERATURE (F)	397	397	368	428	290	307	303	509	533	509
TOTAL FLOW (LB/HR)	133,300	88,500	45,000	88,500	78,500	72,200	159,500	75,400	74,700	84,100
DRY FLOW (LB/HR)	--	--	--	--	--	--	--	--	--	--
NODE	31	32	33	34	35					
STREAM	STEAM FROM HP EVAP.	STEAM TO HP SUPERHEATER	SH STEAM TO GASIFIER	SH STEAM TO MILL	AQ. AMMONIA TO SCR					
PRESSURE (PSIG)	880	880	375	850	50					
TEMPERATURE (F)	533	533	825	825	80					
TOTAL FLOW (LB/HR)	83,200	157,900	1,900	156,000	250					
DRY FLOW (LB/HR)	--	--	--	--	--					

NOTE:
1. BASED ON TAMPELLA PRELIMINARY MASS AND ENERGY BALANCE TRANSMITTED 10/18/94. ADJUSTED FOR GE GAS TURBINE PERFORMANCE PROVIDED BY GE ON NOV. 22, 1994.
2. REFERENCE DRAWING NO. 04996.00-DJ-0004-1.

Table 2-4: Material Balance - Tampella BGCC (Steam Dryer)

NODE	6	10	14	16
STREAM	BIOGAS TO COOLER	BIOGAS TO G.T.	G.T. EXHAUST TO DUCT BURNER	FLUE GAS TO TO STACK
PRESSURE (PSIG)	273	260	1	0
TEMPERATURE (F)	1,625	1,020	1,019	342
TOTAL FLOW (LB/HR)	230,850	210,250	1,170,500	1,190,750
COMPONENTS				
C2H6 (VOL%)	0.02%	0.02%	0.00%	0.00%
C2H4 (VOL%)	0.69%	0.69%	0.00%	0.00%
CH4 (VOL%)	7.50%	7.50%	0.00%	0.00%
CO (VOL%)	12.30%	12.30%	0.00%	0.00%
CO2 (VOL%)	15.90%	15.90%	7.48%	8.07%
H2 (VOL%)	8.50%	8.50%	0.00%	0.00%
H2O (VOL%)	14.30%	14.30%	7.87%	8.23%
N2 (VOL%)	40.70%	40.70%	72.98%	72.73%
O2 (VOL%)	0.00%	0.00%	11.65%	10.97%
NH3 (PPMV)	900	900	0	0
H2S (PPMV)			0	0
NOx (PPMVD)(15%O2)			133	13
CO (PPMVD)			10	10
UNH (PPMV)			7	7
VOC (PPMWT)			0	0
DUST (PPMWT)			4	4
TOTAL	100.00%	100.00%	100.00%	100.00%

NOTE:
1. BASED ON TAMPELLA PRELIMINARY MASS AND ENERGY BALANCE TRANSMITTED 10/18/94. ADJUSTED FOR GE GAS TURBINE PERFORMANCE PROVIDED BY GE ON NOV. 22, 1994.
2. REFERENCE DRAWING NO. 04996.00-DJ-0004-1.

Table 2-5: Equipment List - Tampella BGCC (Flue Gas Dryer)

Item No.	Description	Qty	Remarks
G-301	Gas Turbine Frame 6B	1	42.8 MW
L-302	Pressurized Circulating Fluidized Bed Gasifier	1	Sized by Tampella; includes compr., CW pump, and heat exchanger and startup heater
M-302	AQ. Ammonia Tank*	1	316 SS
M-303	Gasifier Cyclone	1	Sized by Tampella
M-305	Air Receiver Tank	1	Sized by Tampella
M-307	Cleaning Gas Pulse Tank - N2	1	Sized by Tampella
M-308	Continuous Blowdown Tank* C.S.	1	4'-5" x 0'-6" 75 psig design (Vertical)
M-310	HP Continuous Blowdown Tank*	1	3'-10" x 0'-6" 175 psig design (vertical) C.S.
P-301A/B	Cooling Circuit Pumps*	2	Sized by Tampella
P-302A/B	Condensate Pump*	2	200 gpm at 90 psig
P-303 A/B	Blowoff Transfer Pump*	2	3.2 gpm DELTA P=50 psi C.S.
P-304A/B	AQ. Ammonia Pump*	2	.75 gpm, DELTA P=50 psi, 316SS
R-301	Booster Compressor	1	Sized by Tampella
T-301 A,B, C,D	Biomass Dryer	4	Flue gas dryer to 20% moisture
T-302	Product Gas Cooler with Steam Drum	1	Sized by Tampella
T-303	Booster Compressor Air/Air Heat Exchanger	1	Sized by Tampella
T-304	Booster Compressor Feed Cooler	1	Sized by Tampella
T-305	HRSG	1	
T-306	Auxiliary Steam Turbine Condenser*	1	87 mmBtu/hr
T-307	Component Cooler Heat Exchanger*	1	Sized by Tampella
V-302	SCR Unit	1	90% NO_x reduction
V-305	H.T.H.P. Candle Filter	1	Sized by Tampella
V-311	Blowoff Tank*	1	4'-3" x 0'-6" atmospheric design (vertical)
W-303A/B	Gasifier Ash Cooling Screw Conveyor	2	Sized by Tampella
W-304	Biogas Filter Ash Screw Conveyor	1	Sized by Tampella
W-306	Filter Ash/Dolomite Surge, Lock Hopper System	1	Sized by Tampella

Table 2-5: Equipment List - Tampella BGCC (Flue Gas Dryer) (continued)

Item No.	Description	Qty	Remarks
W-307A,B/C	Biomass Feed Weigh, Lock, Surge Hopper System	3	Sized by Tampella
W-308	Dolomite Feed Weigh, Lock, Surge Hopper System	1	Sized by Tampella
W-311A/B	Bottom Ash Surge, Lock Hopper System	2	Sized by Tampella

* Not shown on PFD

Table 2-6: Equipment List - Tampella BGCC (Steam Dryer)

Item No.	Description	Qty	Remarks
G-401	Gas Turbine Frame 6B	1	42.2 MW
L-402	Pressurized Circulating Fluidized Bed Gasifier	1	Sized by Tampella; Includes compr., CW pump, and heat exchanger and startup heater
M-402	AQ. Ammonia Tank*	1	316 SS
M-403	Gasifier Cyclone	1	Sized by Tampella
M-405	Air Receiver Tank	1	Sized by Tampella
M-407	Cleaning Gas Pulse Tank - N2	1	Sized by Tampella
M-408	Continuous Blowdown Tank*	1	4'-5" x 0'-6" (Vertical) 175 psig design C.S.
M-410	HP Continuous Blowdown Tank*	1	3'-10" x 0'-6" 175 psig design (vertical) C.S.
P-401A/B	Cooling Circuit Pumps*	2	Sized by Tampella
P-402A/B	Condensate Pump*	2	200 gpm at 90 psig
P-403A/B	Blowoff Transfer Pump*	2	3.2 gpm DELTA P=50 psi C.S.
P-404A/B	AQ. Ammonia Pump*	2	.75 gpm, DELTA P=50 psi, 316SS
R-401	Booster Compressor	1	Sized by Tampella
T-401A,B, C,D	Biomass Dryer	4	Steam dryer to 20% moisture
T-402	H.R.S.G.	1	2 Pressure levels
T-402	Product Gas Cooler with Steam Drum	1	Sized by Tampella
T-403	Booster Compressor Air/Air Heat Exchanger	1	Sized by Tampella
T-404	Booster Compressor Feed Cooler	1	Sized by Tampella
T-404	Component Cooler Heat Exchanger*	1	Sized by Tampella
T-405	H.R.S.G.	1	2 pressure levels
T-406	Auxiliary Steam Turbine Condenser*	1	87 mmBtu/hr
V-402	SCR Unit	1	90% NO_x reduction
V-405	H.T.H.P. Candle Filter	1	Sized by Tampella
V-411	Blowoff Tank*	1	4'-3" x 0'-6" atmospheric design (vertical)
W-403A/B	Gasifier Ash Cooling Screw Conveyor	2	Sized by Tampella
W-404	Biogas Filter Ash Screw Conveyor	1	Sized by Tampella
W-406	Filter Ash/Dolomite Surge, Lock Hopper System	1	Sized by Tampella

Table 2-6: Equipment List - Tampella BGCC (Steam Dryer) (continued)

Item No.	Description	Qty	Remarks
W-407A,B/C	Biomass Feed Weigh, Lock, Surge Hopper System	3	Sized by Tampella
W-408	Dolomite Feed Weigh, Lock, Surge Hopper System	1	Sized by Tampella
W-411A/B	Bottom Ash Surge, Lock Hopper System	2	Sized by Tampella

* Not shown on PFD.

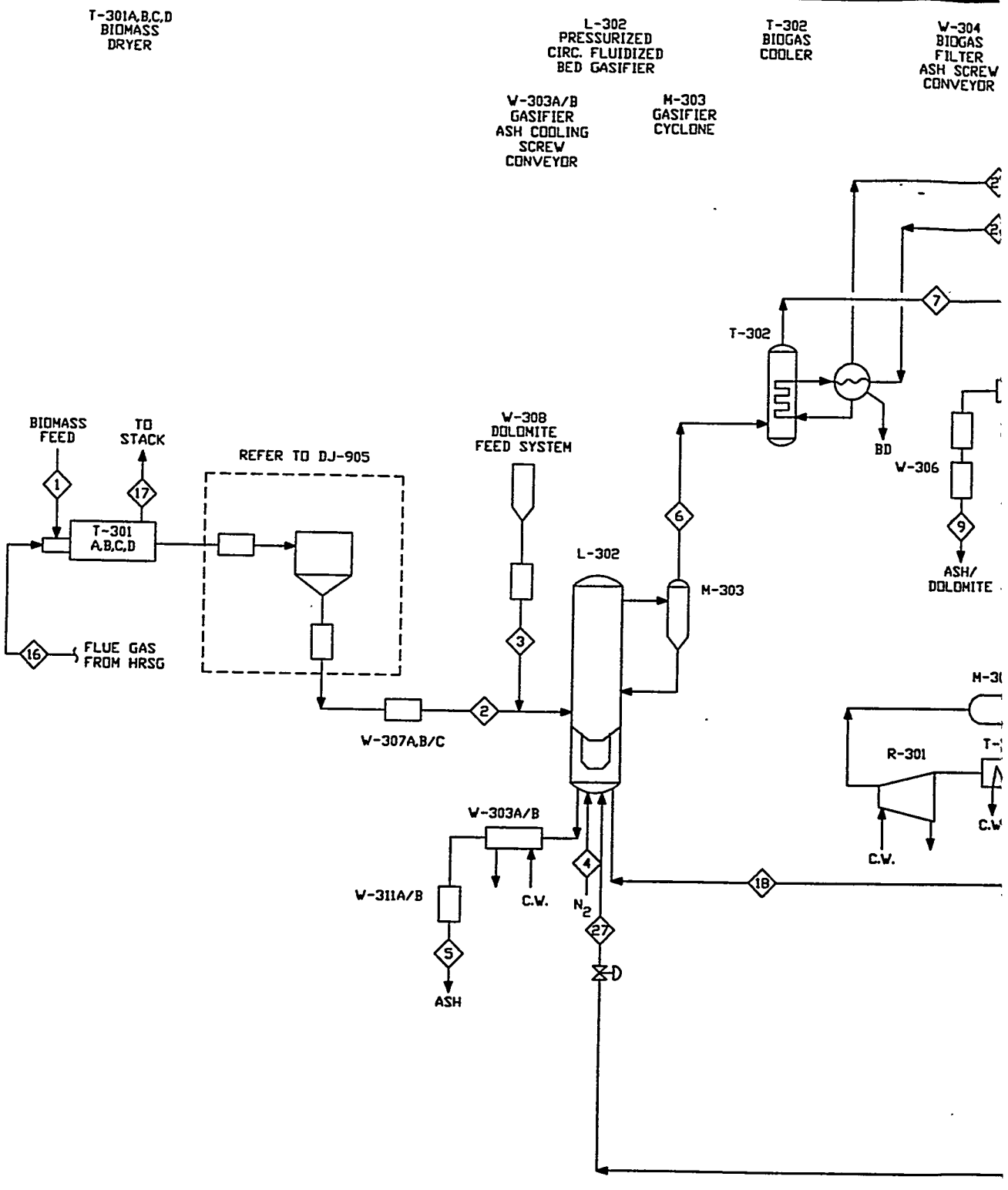

PLOT 2/7 WEYDJ03

ISSUE	DESCRIPTION	CHKD	CORRECT	ISSUE	DESCRIPTION	CHKD	CORRECT	ISSUE	DESCRIPT
PC ARCH CIVIL CONC STL L&P INST MD	P.E. S.A. FAC ELEC LTG MATL			PC ARCH CIVIL CONC STL L&P INST MD	P.E. S.A. FAC ELEC LTG MATL			PC ARCH CIVIL CONC STL	

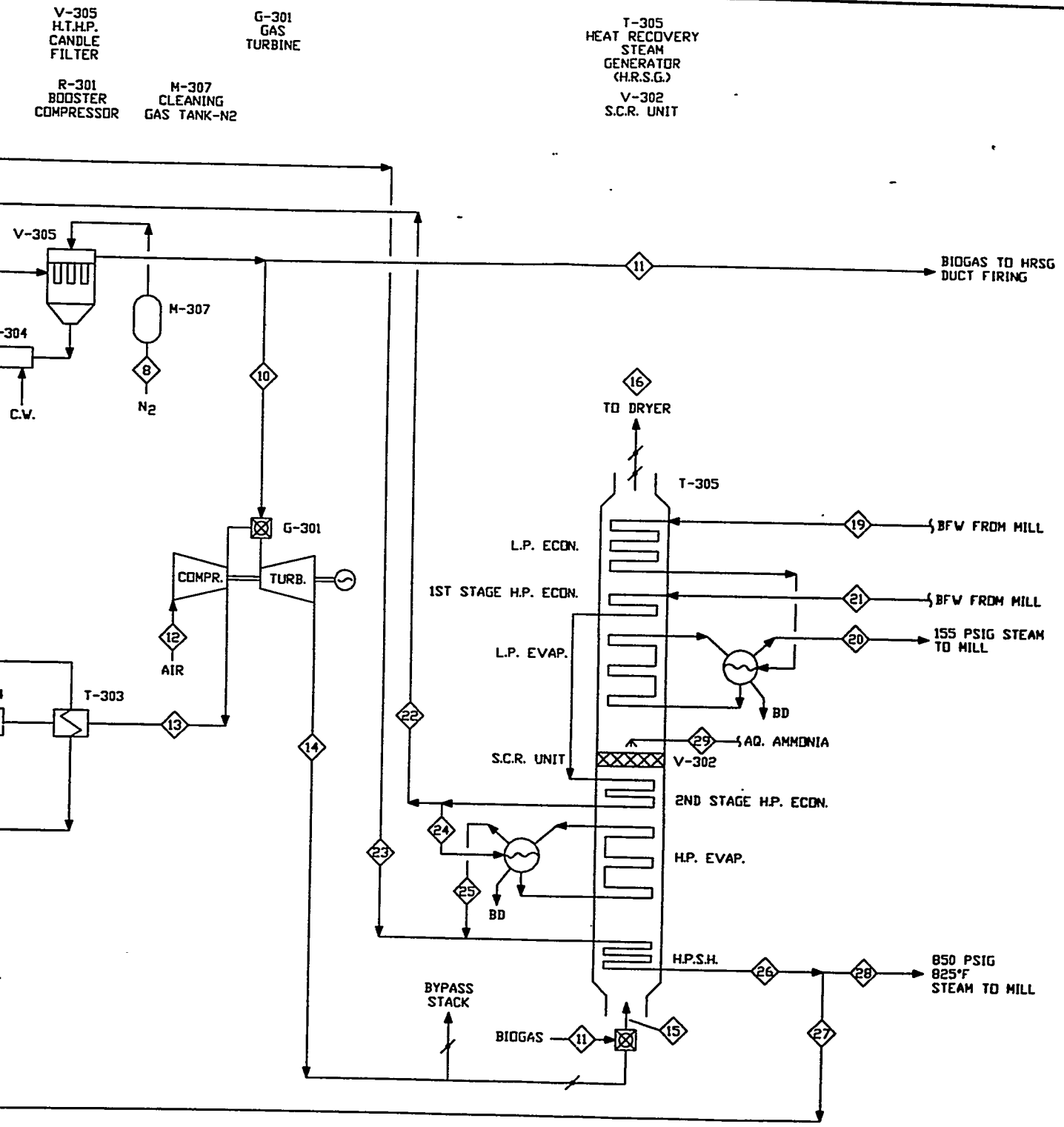

Figure 2.2-1

Figure 2-2
BGCC Retrofit
BGCC - Process Flow Diagram
Tampella (Flue Gas Dryer)

DRAWING NUMBER 04996.00-DJ-0003-1

OCT. 1994

DESIGNED BY: MD DRAWN BY: LEC

DSGN CHK'D BY: CHK'D BY:

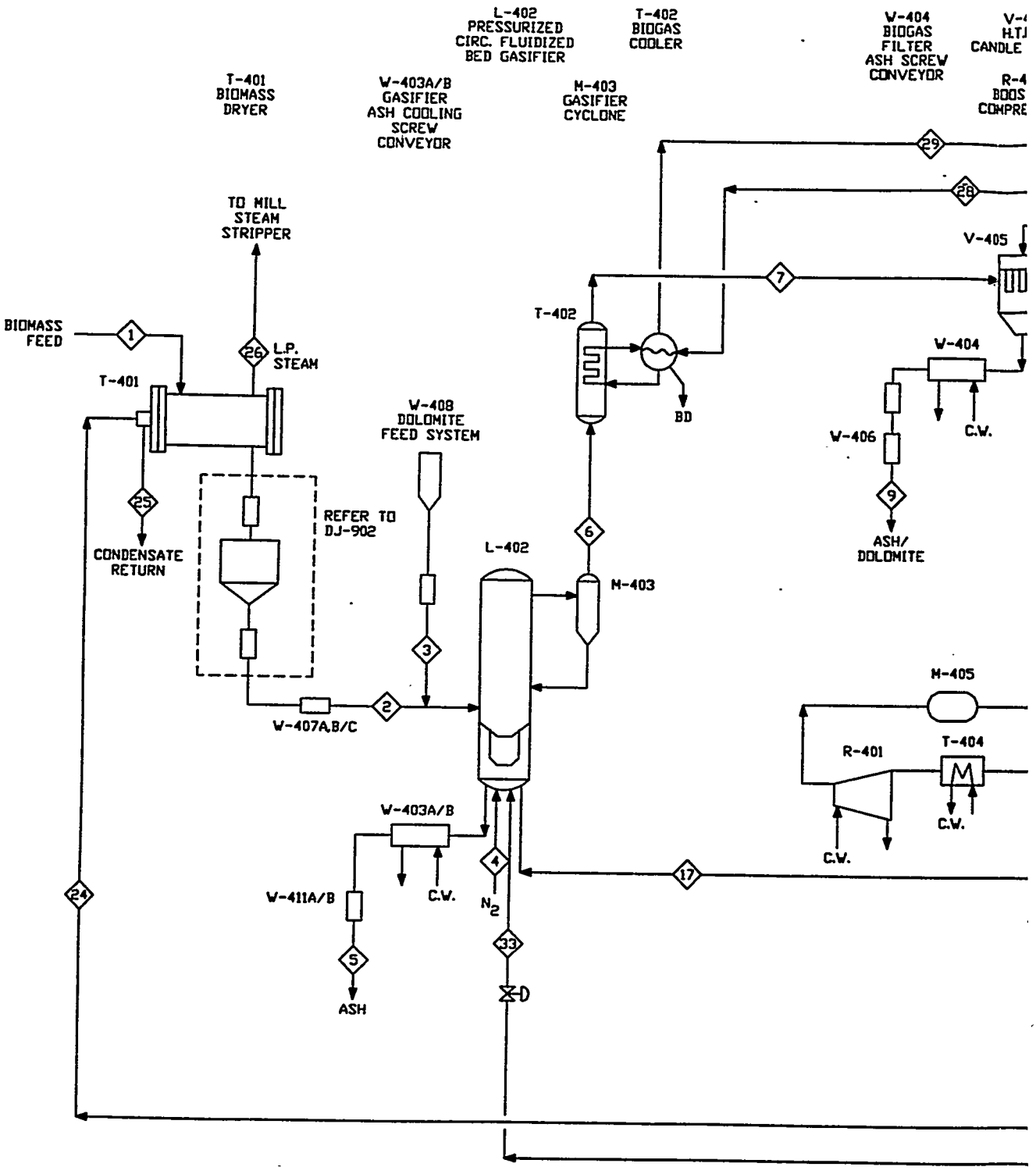

PLOT 2/7

WEYDJ04

ISSUE	DESCRIPTION								CHKD	CORRECT					APPR.	ISSUE	DESCRIPTION								CHKD	CORRECT					APPR.	ISSUE	DESCRIPTION
PC	ARCH	CIVIL	CONC	STL	L&P	INST	MB	P.S.	S.A.	FAC	ELEC	LTG	MATL			PC	ARCH	CIVIL	CONC	STL	L&P	INST	MB	P.S.	S.A.	FAC	ELEC	LTG	MATL			PC	ARCH	CIVIL	CONC

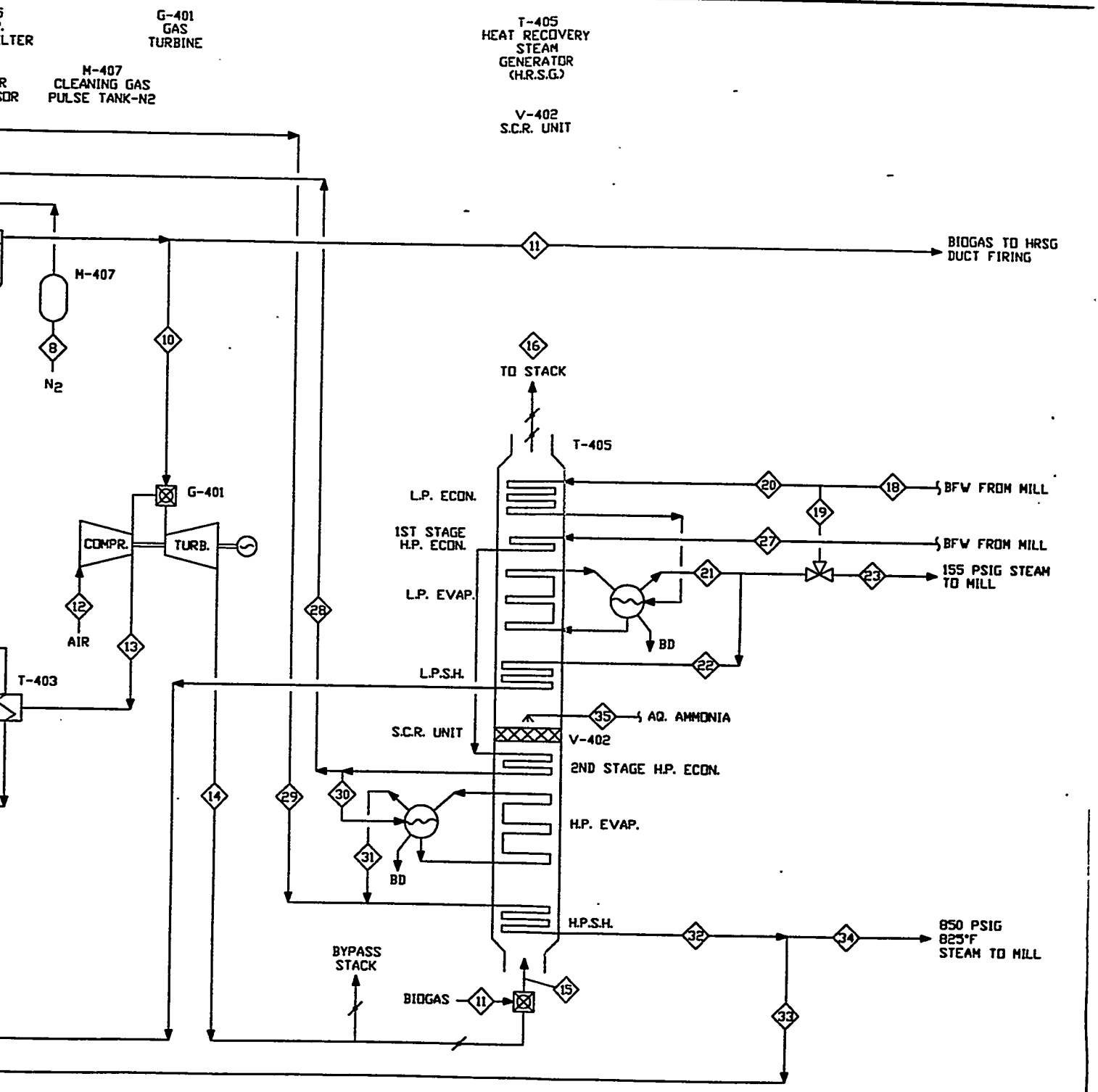

-403.
OSTER
RESSOR
R/AIR
EAT
HANGER

Figure 2-3
BGCC Retrofit
BGCC - Process Flow Diagram
Tampella (Steam Dryer)

DRAWING NUMBER 04996.00-DJ-0004-1

DESIGNED BY: MD
DRAWN BY: LEC
DSGN CHK'D BY:
CHK'D BY:

AREAS | LEVELS | WORK PKG

DCT. 1994

ISSUE	DESCRIPTION	CHKD	CORRECT
PC	ARCH CIVIL CONC STL L&P DIST MD	P.S.	S.A. FAC ELEC LTG MATL

2.3 Biomass to Ethanol Plant Design

Amoco provided preliminary process information for its proprietary biomass to ethanol plant to be located adjacent to the Weyerhaeuser mill in New Bern, NC. The data were not obtained in an integrated manner, but were taken from pilot studies done by Amoco on several different hardwood feedstocks. A large portion of the proposed residuals feedstock is immature softwood thinnings which have a composition similar to hardwood. It was assumed that these thinnings would react to the enzyme in the same manner as hardwood.

Using the Amoco information, Stone & Webster developed a process flow sheet, sized equipment list, and heat and material balance to support a budgetary capital cost estimate and an operating and maintenance (O&M) cost estimate. The basis of design for this facility is described in Section 1.3.

The Amoco biomass-to-ethanol technology uses a proprietary yeast that is capable of fermenting both hexose and pentose sugars. The process also includes a proprietary pretreatment step that hydrolizes the raw wood chip feed while minimizing by-product formation. These two process improvements distinguish the Amoco ethanol process from other biomass to ethanol processes. Amoco provided cost information for the proprietary hydrolyzer and yeast and a range of enzyme costs.

The following sections provide descriptions of the main sections of the Amoco cellulose-to-ethanol plant. Each section also has a corresponding process flow sheet. The overall heat and material balance for the process is shown in Table 2-7. A process equipment list, organized by plant section, is provided in Table 2-8.

System Description

The overall block flow diagram for the Amoco Ethanol process is shown in Figure 2-4. When integrated with a BGCC plant, lignin from the filtration is fed to the gasifier. For a stand-alone ethanol plant, the lignin may be sold as a fuel or fed to the existing mill bark boiler.

The following sections describe the pretreatment SSF fermentation, distillation, stillage handling, and chemical storage sections of the plant. On the block flow diagram, the pretreatment section includes fuel handling, chip preheat, pretreatment, first and second stage flashes, and chemical additions prior to fermentation. The distillation section includes beer distillation; flash recovery and molecular sieve dehydration. The centrifuge and filtration steps are described in the stillage handling section, where yeast propagation is included in the SSF fermentation section.

Pretreatment

Area 200 of the biomass-to-ethanol plant is shown on Figure 2-5, Process Flow Diagram - Pretreatment. Whole tree wood chips conveyed from the wood chip storage pile reclaim enter the chip bin which provides short-term surge capacity for the process. The chip meter measures the flow rate of chips to the chip preheater. The chips are preheated using both a portion of the high pressure flash vapor and low pressure flash condensate prior to pretreatment hydrolysis. Preheated chips and sufficient acid are fed into the proprietary pretreatment hydrolyzer where high pressure steam raises the temperature to 489°F. The pretreated wood substrate flashes to 237°F. Flash vapor preheats the chip feed stream and provides vapor to the beer column in the distillation system. Lime slurry is added to the wood substrate to raise the pH to 7.5 and this mixture is further flash cooled to 140°F in the LP flash tank. Flash vapor is condensed and used to preheat the chip feed. A vacuum pump maintains the vacuum required at the LP flash condenser. The wood substrate is mixed with process water and recycle stillage, which are added

to dilute and cool the substrate to 97°F, and is conveyed to the first stage fermenter. To reduce the substrate temperature, the process water and recycle stillage are cooled to 65°F using chilled water.

SSF Fermentation

Area 300 of the biomass to ethanol plant is shown in Figures 2-6 and 2-7. The acidity of the diluted wood substrate leaving the pretreatment section is adjusted to pH 4 with the addition of sulfuric acid. The SSF feed conveyor then conveys the substrate into the first fermenter of a series of cascade flow fermenters. An ethanol recycle stream from the anhydrous molecular sieve unit regeneration cycle is added to the first fermenter. Enzyme substrate and propagated yeast inoculum are also added to the first fermenter. Simultaneous saccharification and fermentation reactions proceed while the wood substrate flows through the fermenter vessels.

The first seven fermenters are equipped with external pumped fermenter cooling heat exchangers used to maintain the fermenting substrate at 90°F. Chilled water is used as the cooling medium. An air blower sparges air into the recirculating substrate, primarily in the first three fermenters where yeast growth is required. Carbon dioxide gas collected from all fermenters passes through the carbon dioxide scrubber where process water scrubs residual ethanol from the gas and is pumped to the beer well. The scrubbed gas vents to atmosphere.

The fermented substrate flows into the beer well which acts as a final fermenter and surge tank for feed to the distillation system.

Proprietary yeast, capable of fermenting both hexose and pentose sugars, is grown from laboratory culture and propagated to concentrations required for fermenter inoculation. The culture is propagated in diluted glucose with the necessary nutrients, such as corn steep liquor, phosphoric acid, and ammonia.

Yeast culture is grown in successive vessel sizes starting with the yeast starter tank. The contents of this tank are used to inoculate one of two seed tanks from which the contents are used to inoculate one of three yeast day tanks. Once the yeast population has been reached in the yeast day tanks, its contents are pumped to the first fermenter on a continuous basis.

Each of these vessels is continuously agitated, cooled with chilled water in cooling jackets, and sparged with the necessary air required for optimal yeast growth. Each of these vessels is operated in batch mode. Each cycle of operation includes clean in place (CIP) cleaning with caustic solution followed by water rinse. Once cleaned, the vessels are filled with glucose and nutrients and the propagation cycle is repeated.

Distillation and Dehydration

Distillation and dehydration of the fermented substrate (Area 400) is shown in Figure 2-8. The product storage (Area 400) is shown in Figure 2-9. Fermented substrate, termed "beer," is pumped through the beer preheater and beer heater and fed onto the top tray of the beer column. This column operates at atmospheric pressure. Alcohol is stripped from the beer into the overhead vapor which is directed into the base of the rectifying column. The alcohol is concentrated to 95 percent by volume. A portion of the overhead vapor from the rectifying column is condensed by preheating the beer feed. The condensate is returned as reflux. The product portion of the vapor is fed to the dehydration unit with the balance of the remaining vapor condensed in the rectifying column condenser. A fusel oil stream is drawn off the rectifying column and fed to the washer column in which process water is used to extract an aqueous alcohol layer from the fusel oil layer. The aqueous alcohol layer is returned to the rectifying column.

Fusel oil is stored in the fusel oil tank and pumped to alcohol storage for product blending. Dilute alcohol from the base of the rectifying column is pumped to the beer column for reflux.

The stillage issuing from the base of the column is flash cooled in the stillage flash tank. Flash vapor is drawn into a steam ejector and combined with the ejector motive steam for direct addition to the beer column.

This vapor, together with flash vapor from the wood chip pretreatment section, provides the necessary boil-up energy for distillation. Stillage is pumped through the beer heater, for further cooling by preheating the beer feed, to the stillage handling area.

Ethanol vapor from the rectifying column is superheated with the steam and blown into one of two molecular sieve bed vessels. One bed operates while the other regenerates using a portion of the anhydrous vapor product. The regeneration results in a diluted alcohol steam which is collected in the regeneration tank and pumped back to the first fermenter. Anhydrous ethanol product is condensed and flows to alcohol storage.

Two day tanks are provided to collect the daily alcohol production and to verify quality. If quality is unacceptable, the alcohol is pumped back to the rectifying column with the re-run pump.

Before the alcohol is pumped to the alcohol storage tank, the alcohol concentration is reduced to the minimum specification by adding fusel oil and denaturant gasoline is blended into the product. One truck loading arm and three rail car loading arms are provided for product loading.

Stillage Handling

Stillage handling recovers lignin cake for use as feedstock in the BGCC plant. There is insufficient information available on the dewaterability of the stillage. The design presented herein has not been tested. Optimization of this plant section could have a major impact (either positive or negative) on the ethanol plant capital and operating costs.

Figure 2-10 shows the stillage handling (Area 500) section of the ethanol plant. Stillage from the bottom of the beer column enters the stillage tank which provides 30 minutes of surge capacity. Stillage is pumped through the stillage cooler to reduce the temperature to 150°F and fed to three parallel centrifuges. Lignin based cake at 25 percent solids is conveyed to three parallel rotary filters for further dewatering to 55 percent total solids. The filtered lignin cake is conveyed to the BGCC plant where it is used as fuel.

A portion of the centrifuge liquid is fed to the recycle stillage tank and from there pumped through the recycle cooler to reduce the temperature to 65°F using chilled water. The recycle stillage is added to the pretreated wood substrate before fermentation. The balance of the centrifuge liquid is added to the filter liquid in the waste liquid tank. This liquid is pumped to the existing liquid waste treatment facility on site.

Chemical Storage

Area 600, the clean-in-place (CIP) and Nutrient preparation and chemical storage sections of the ethanol plant are shown in Figures 2-11 and 2-12. Dilute caustic solution is prepared in the CIP tank using 50 percent caustic from the caustic storage tank. The dilute caustic is pumped to the yeast propagation and fermentation vessels for CIP cleaning as required. This solution is returned to the spent CIP tank after

the wash and reused for further cleaning cycles until the detergent action is reduced and then slowly drained to the liquid waste treatment facility.

The steep liquor tank and syrup tank are provided with steam coils to maintain desired storage temperatures. Glucose syrup is diluted with process water, pumped through the in-line mixer and on to one of the yeast vessels. Steep liquor, phosphoric acid, and aqueous ammonia are batch mixed in the nutrient mix tank and pumped to a yeast vessel in quantities as required.

Lime is stored in the lime storage silo and conveyed to the lime mix tank. Batch quantities of lime and water are mixed and the lime slurry is pumped to pretreatment as required.

Plant Design Review

This section addresses questions about assumptions and approach raised during reviews of the preliminary design and discusses information which became available after the design was completed. This will provide a basis for future design development and optimization efforts.

Aeration in SSF

The proprietary yeast selected for SSF is capable of fermenting hexose and pentose sugars and is not microaerophilic. For the purpose of yeast propagation and SSF inoculation cell mass development, it was assumed to have similar characteristics to Saccharomyces Cerevisiae and the aeration requirements were calculated accordingly. Recent discussions with Amoco indicate that aeration in the SSF fermentation system may not be required for the proprietary yeast because sufficient inoculation cell mass levels may be achieved in the yeast propagation system to satisfy the fermentation requirements.

Solids Conveying System

The solids conveying system following the pretreatment step has not been optimized. The solids conveying system utilized is a conservative engineering approach for the transport of material whose properties are as yet not well defined. A more complete understanding of material properties, together with suitable design refinements may permit the use of slurry pumps to move the material from the pretreatment to the SSF stage, which would enhance system operability. Other alternatives include the use of an inclined conveying system. Any future design changes are not expected to have a significant impact on the capital cost.

Xylanase Activity

The enzyme used in the ethanol process shows both cellulose and xylose hydrolysis activity. In the material balance, non-hydrolyzed C5 material has been lumped into a single category labeled "xylan" and has been carried throughout the balance as an inert. This "lumping" approach afforded a convenience to handling the material balance and should not be misconstrued to imply that xylan material does not convert at all. The material balance reflects laboratory data for C5 hydrolysis and fermentation activity.

Fermentation Byproducts

The material balance includes fusel oil which is a major byproduct of fermentation. Fusel oil is shown to be separated in the distillation system and later available to be recombined with the ethanol product to the limit allowed by the purity specification. Fusel oil consists of propyl, butyl and amyl alcohols.

Other byproducts of fermentation such as aldehydes, esters and organic acids (acetic, succinic) are at low concentration levels and were not specifically identified and accounted for in the material balance.

Flash Systems

The pretreatment technology employed in the design basis is a highly selective hydrolysis process which minimizes the formation of degradation products such as furfural and HMF. Laboratory data show the yield of these two degradation by-products during hydrolysis is less than 0.5 percent. Off-gas handling systems for the degradation products were not fully engineered. However, given the small quantity of furfural and HMF produced in the pretreatment, it is unlikely the capital costs associated with their handling will be material. Subsequent phases of biomass-to-ethanol development will address the off gas handling requirements.

Gypsum Formation

The ethanol plant design material balance tracks gypsum formation following acid hydrolysis and lime addition in the material category labeled "soluble solids." Gypsum formation was folded into this category for two reasons. First, the quantity of gypsum formed is small, amounting to no more than 130 pounds per hour. Second, the formed gypsum is well below the concentration levels which will foster its precipitation. However, it is recognized that gypsum precipitation is likely to occur in the beer still bottom where temperatures are higher than elsewhere in the system. Whether or not scaling produced in the beer still bottom will be problematic is an issue for later phases of biomass-to-ethanol engineering development.

Agitation

Agitation costs and power requirements are very high. The agitation requirements were developed by a major vendor based on limited laboratory viscosity data.

Materials of Construction

Fermentation vessel costs are based on tile-lined, concrete construction. Although the "industry standard" is stainless steel, Stone & Webster had recent costs for concrete tile-lined vessels developed for a sulfite liquor ethanol plant. Based on the current cost of stainless steel, installed costs for concrete tile-lined vessels may be less expensive. There is a potential for increased contamination with the tile-lined design due to the difficulty in cleaning the grouting. The cost and risk trade-offs would be carefully considered in final engineering.

Feedstock Reactivity

A large portion of the proposed residuals feedstock is immature softwood thinnings which have a composition similar to hardwood. It was assumed that these thinnings would react to the enzyme in the same manner as hardwood. Subsequent testing in pilot facilities indicates that the thinnings behave more like softwood and are not a viable feedstock with present pretreatment technology.

Lignin (Stillage) Dewatering

Lignin dewatering characteristics are dependent on feedstock and processing. Unfortunately, samples of lignin from the pilot processing of the proposed feedstock were not available for examination and testing. Alternative dewatering designs utilizing combinations of anaerobic digestion pretreatment to improve dewaterability, centrifugation, evaporation, and various filtration types were considered. The centrifuge/rotary vacuum filter combination was selected based on discussions with vendors. This design is realistic both in terms of technical viability and cost.

Table 2-7 Material Balance - Amoco Ethanol Plant

Node	10	10	11	12	13	14	15	16	17	18	19	20
Stream	Wood Chips 1000 ODT/d	% composition	Flash vapor Recycle	Heated Chips	H2SO4 acid	Steam	Digested Chips	1st Flash vapor	1st Flash Bottoms	Lime Slurry	2nd Flash Condensate	2nd Flash Bottoms
cellulose	31,945	18.40		31,945			28,751		28,751			28,751
glucose							15,529		15,529			15,529
hemicellulose	20,407	11.75		20,407			2,041		2,041			2,041
xylose							5,218		5,218			5,218
lignin	21,373	12.31		21,373			21,373		21,373			21,373
carbon dioxide												
soluble solids/inerts	8,308	4.79		8,308	347		11,671		11,671	174		11,845
insoluble solids/inerts	1,300	0.75		1,300			1,300		1,300			1,300
ethanol												
enzyme												
spent enzyme												
yeast												
yeast residue												
air												
fusel oil												
water	90,278	52.00	7,156	112,538	26	70,671	181,033	56,864	124,169	879	15,104	109,944
total flow (lb/hr)	173,611	100.00	7,156	195,871	373	70,671	266,916	56,864	210,052	1,052	15,104	196,000
% total solids	48.00			42.55	93.00		32.18		40.89	16.50		43.91
% solids insol & fiber	45.39			40.00			22.80		30.10			32.72
temp deg (F)	60		237	124	75	490	489	237	237	75	140	140
pressure (psia)	atm		38			622	615	24			3	
enthalpy (Btu/hr)	3,461,111		8,297,255	13,389,588	7,096	85,034,724	98,431,407	65,934,384	32,497,024	40,765	1,631,221	15,591,548
heating value (Btu/lb)			1,160			1,203		1,160			1,122	
comments												

Node	21	22	23	24	25	26	27	28	29	30	31	32
Stream	Dilution Water-PW	H2SO4 acid	Recycle Stillage	1st Flash Vapor Excess	Diluted Feed	Ethanol Recycle	Cellulase Enzyme	SPARE	SSF Feed	Beer	CO2 vent	Water
cellulose			155		28,906				28,906	7,548		
glucose			45		15,575				15,625	385		
hemicellulose			43		2,083				2,083	2,083		
xylose			62		5,280				5,280	528		
lignin			449		21,822				21,822	21,822		
carbon dioxide											20,946	
soluble solids/inerts		69	1,564		13,478		24		13,553	13,553		
insoluble solids/inerts			27		1,327				1,327	1,327		
ethanol			30		30	5,419			5,450	27,337	10	
enzyme							73		74	74		
spent enzyme			2		2							
yeast									121	1,000		
yeast residue			21		21							
air											7,000	
fusel oil												
water	147,626	5	49,209	49,708	306,784	3,322	2,320		320,425	332,675	377	7,817
total flow (lb/hr)	147,626	75	51,607	49,708	395,308	8,741	2,417		414,666	408,332	28,333	7,817
% total solids		93.00	4.65		22.39	62.00	4.00		21.41	11.83		
% solids insol & fiber			1.35		15.00				14.45	8.97		
temp deg (F)	65	75	65	237	97	185	75		96	90	90	75
pressure (psia)			150	24								
enthalpy (Btu/hr)	4,871,664	1,419	1,654,855	57,637,128	22,119,486	508,206	100,176		22,727,868	20,391,271		336,118
heating value (Btu/lb)				1160								
comments							#1enzyme				#3-air	

Table 2-7 Material Balance - Amoco Ethanol Plant

Node	33	34	35	36	37	38	39	40	41	42	43	44
Stream	Yeast Nutrients	Glucose Syrup	Laboratory Yeast	Yeast Innoculum	Seed Air	SSF Air	CO2 Scrubber Water	vapor in	Steam-HP	Ethanol Product	Fusel Oil	Stillage
cellulose												7,548
glucose		250		50								385
hemicellulose												2,083
xylose												528
lignin												21,822
carbon dioxide												13,228
soluble solids/inerts	50			50								1,327
insoluble solids/inerts										21,678	20	219
ethanol												
enzyme												74
spent enzyme												
yeast			3	100								1,000
yeast residue												
air					1,400	7,000					325	
fusel oil												
water	46	135	3	8,000			15,000	45,971	1,914	22	20	430,991
total flow (lb/hr)	96	385	6	8,200	1,400	7,000	15,000	45,971	1,914	21,700	366	479,205
												10.02
% total solids	52.39	65.00	50.00	2.44								7.07
% solids insol & fiber												228
temp deg (F)	75	75	75	90	60	60	90	230	367	75	100	
pressure (psia)					35	65		21	167			
enthalpy (Btu/hr)	2,829	10,088	129	466,326			870,000	53,190,292	2,288,203	933	1,393	88,152,819
heating value (Btu/lb)								1157	1196			
comments			#2-yeast		#3-air	#3-air			150 psig		#1-F.O.	

Node	45	46	47	48	49	50	51	52	53	54	55	
Stream	Flashed Stillage	Flash vapor	Motive Steam	Centrifuge Feed	Centrifuge Cake	Centrifuge Liquid	Excess Liquid	Fusel Oil Wash water	Filter Cake	Filter Liquid	Waste Liquid	
cellulose	7,548			7,548	6,415	1,132	977		6,095	321	1,298	
glucose	385			385	53	332	287		21	31	318	
hemicellulose	2,083			2,083	1,771	313	270		1,682	89	358	
xylose	528			528	72	456	393		29	43	436	
lignin	21,822			21,822	18,549	3,273	2,825		17,621	927	3,752	
carbon dioxide												
soluble solids/inerts	13,228			13,228	1,813	11,415	9,850		731	1,082	10,932	
insoluble solids/inerts	1,327			1,327	1,128	199	172		1,072	56	228	
ethanol	219			219		219	189				189	
enzyme												
spent enzyme	74			74	63	11	10		60	3	13	
yeast												
yeast residue	1,000			1,000	850	150	129		808	43	172	
air												
fusel oil												
water	416,131	14,860	31,112	416,131	57,041	359,090	309,882	6,000	23,007	34,035	343,916	
total flow (lb/hr)	464,345	14,860	31,112	464,345	87,756	376,590	324,983	6,000	51,126	36,630	361,613	
% total solids	10.34			10.34	35.00	4.59	4.59		55.00	7.09	4.84	
% solids insol & fiber	7.30			7.30	32.82	1.35	1.35		53.50	3.93	1.61	
temp deg (F)	196	196	367	150	150	150	150	90	150	150	150	
pressure (psia)	10	10	167									
enthalpy (Btu/hr)	71,149,603	17,003,216	33,026,611	51,318,173	8,137,483	43,180,690	37,263,331	348,000	4,001,059	4,136,424	41,399,755	
heating value (Btu/lb)	1144	1144	1062									
comments			150 psig									

Table 2-8: Equipment List - Amoco Ethanol Plant

Qty.	Equipment	Description	HP
200 Area: Pretreatment			
1	T-201 LP Flash Condenser	Shell & tube exchanger Floating head design Surf. area: 2,840 ft² Material: SS 316 DP: 100 psig/Full vacuum	
1	T-202 Process Water Cooler	Plate type exchanger Surf. area: 750 ft² Material: SS 316 plates DP: 100 psig	
1	V-201 Chip Meter	Capacity: 90 ton/hr Material: Carbon steel	
1	V-202 Chip Feeder	Low pressure feeder Cap: 90 ton/hr Material: SS 316	40
1	V-203 Chip Preheater	Cap: 104 ton/hr 48" dia. x 15' length Material: SS 316	75
1	V-204 Hydrolyzer Feeder	High pressure feeder Cap: 104 ton/hr Material: SS 316	75
1	V-205 Pretreatment Hydrolyzer	Package unit - See Amoco for details.	4830 kW
1	V-206 LP Flash Feeder	High pressure feeder Cap: 103 ton/hr Material: SS 316	75
1	V-207 Conveyor Feeder	Low pressure feeder Cap: 100 ton/hr Material: SS 316	40
1	W-201 Pretreatment Conveyor	Cap: 100 ton/hr 36" dia. x 20' length	75
1	W-202 SSF Feed Elevator	Cap: 100 ton/hr	30
1	P-201 Flash Condensate Pump	Centrifugal Cap: 30 gpm Head: 150 ft Material: SS 316	5
1	P-202 Vacuum Pump	Liquid ring type Cap: 300 cfm air C/W separator tank, skid assembly	20

Table 2-8: Equipment List - Amoco Ethanol Plant (Cont)

Qty.	Equipment	Description	HP
1	M-201 Chip Bin	Cap: 900 ft^3 10' dia. x 12' T/T Material: Carbon steel	
1	M-202 HP Flash Tank	Cap: 3,500 gal. 8' dia. x 10' T/T Material: SS 316 DP: 50 psig	
1	M-203 LP Flash Tank	Cap: 3,500 gal. 8' dia. x 10' T/T Material: SS 316 DP: Full vacuum	
1	M-204 Flash Condensate Tank	Cap: 500 gal. 48' dia. x 5' T/T Material: SS 316 DP: Full vacuum	
300 Area: Saccharification & Fermentation			
1	A-301 Carbon Dioxide Scrubber	10 Sieve trays 8' dia. x 15' T/T (5' skirt) Material: SS 304 DP: 0.5 psig	
1	T-301 1st Stage Fermenter Cooler	Double pipe exchanger 5 parallel units 240 ft^2/unit 6-40' lengths 3" dia. inner pipe SS 316 4" dia. outer pipe CS DP: 100 psig C/W support rack structure	
1	T-302 Fermenter Cooler	Double pipe exchanger 4 parallel units 150 ft^2/unit 4-40' lengths 3" dia. inner pipe SS 316 4" dia. outer pipe SS CS DP: 100 psig C/W support rack structure	
5	T-303 A-E Fermenter Cooler	Double pipe exchanger 4 parallel units 150 ft^2/unit 4-40' lengths 3" ID pipe SS 316 4" OD pipe CS DP: 100 psig C/W support rack structure	

Table 2-8: Equipment List - Amoco Ethanol Plant (Cont)

Qty.	Equipment	Description	HP
1	W-301 SSF Feed Conveyor	Screw conveyor 30" dia. - 60' length Material: SS 316 C/W removable cover	50
3	V-301 A,B,C SSF Agitators	M-301A, top mounted agitators Lightnin 784Q350 Wetted parts SS 316	350 (ea)
3	V-302 A,B,C SSF Agitators	M-301B, top mounted agitators Lightnin 784Q350 Wetted parts SS 316	350 (ea)
3	V-303 A,B,C Fermenter Agitators	M-303A, top mounted agitators Lightnin 783Q150 Wetted parts SS 316	150 (ea)
3	V-304 A,B,C Fermenter Agitators	M-303B, top mounted agitators Lightnin 783Q150 Wetted parts SS 316	150 (ea)
3	V-305 A,B,C Day Tank Agitator	Top mounted agitator Wetted parts SS 304	20 (ea)
2	V-306 A,B Seed Tank Agitator	Top mounted agitator Wetted parts SS 304	3 (ea)
1	V-307 Starter Tank Agitator	Top entry agitator Wetted parts SS 304	0.5
2	V-308 A, B	M-303C & D, top mounted agitator Lightnin 784Q350 Wetted parts SS 316	350 (ea)
4	V-309 A-D	M-303E, F, G, & M-304, top mounted agitator Lightnin 783Q150 Wetted parts SS 316	150 (ea)
1	P-301 Fermenter Cooler Pump	Heavy duty centrifugal pump Cap: 1300 gpm Head: 200 ft Material: SS 317	150
1	P-302 Enzyme Pump	Centrifugal pump Cap: 5 gpm Head: 75 ft Material: SS 316	2
1	P-303 Enzyme Unloading Pump	Centrifugal pump Cap: 150 gpm Head: 75 ft Material: SS 316	7.5

Table 2-8: Equipment List - Amoco Ethanol Plant (Cont)

Qty.	Equipment	Description	HP
1	P-304 1st Fermenter Pump	Heavy duty centrifugal pump Cap: 1000 gpm Head: 100 ft Material: SS 316	75
1	P-305 Fermenter Pump	Heavy duty centrifugal pump Cap: 1300 gpm Head: 150 ft Material: SS 316	60
5	P-306 A-E Fermenter Pump	Heavy duty centrifugal pump Cap: 1300 gpm Head: 150 ft Material: SS 316	75 (ea)
1	P-307 Beer Feed Pump	Centrifugal pump Cap: 770 gpm Head: 250 ft Material: SS 316	75
1	P-308 Yeast/Day Tank Pump	Centrifugal pump Cap: 20 gpm Head: 75 ft Material: SS 316	5
1	P-309 Seed Tank Pump	Centrifugal pump Cap: 75 gpm Head: 50 ft Material: SS 316	3
1	P-310 Yeast Air Blower	Rotary Lobe Blower Cap: 350 scfm Pressure: 10 psig C/W inlet filter, silencer	25
1	P-311 Air Blower	Rotary Lobe Blower Cap: 1500 scfm Pressure: 10 psig C/W inlet filter, silencer	100
1	P-312 Scrubber Pump	Centrifugal pump Cap: 30 gpm Head: 75 ft Material: SS 316	1.5
2	M-301 A,B 1st Stage Fermenters	Cap: 434,000 gal. 40' dia. x 50' Material: Concrete/tile lining sloped bottom/cone roof c/w top agitator support steel DP: 0.5 psig	

Table 2-8: Equipment List - Amoco Ethanol Plant (Cont)

Qty.	Equipment	Description		HP
1	M-302 Enzyme Storage Tank	Cap: Material: DP:	40,000 gal. 16' dia. x 26' T/T SS 304 Atmospheric	
7	M-303 A-G Fermenters	Cap: Material: DP:	921,000 gal. 56' dia. x 50' T/T Concrete/tile lining sloped bottom 0.5 psig	
1	M-304 Beer Well	Cap: Material: DP:	921,000 gal. 56' dia. x 50' T/T Concrete/tile lining sloped bottom 0.5 psig	
1	M-305 Yeast Starter Tank	Cap: Material: C/W: DP:	160 gal. 30" dia. x 48" T/T SS 304 Air sparger, cooling jacket Atmospheric	
2	M-306 A,B Seed Tank	Cap: Material: C/W: DP:	1,600 gal. 5'6" dia. x 9' T/T SS 304 Air sparger, cooling jacket Atmospheric	
3	M-307 A,B,C Day Tanks	Cap: Material: C/W: DP:	16,000 gal. 12' dia. x 19' T/T SS 304 Air sparger, cooling jacket Atmospheric	
400 Area: Distillation & Alcohol Storage				
1	A-401 Beer Column	11' dia. x 52' 30 Sieve trays Material: DP:	 SS 304 14 psig	
1	A-402 Rectifying Column	11' dia. x 45' F/T 35 Sieve trays Material: DP:	 SS 304 14 psig	
1	A-403 Washer Column	3' dia. x 6' T/T Material: C/W packing	 SS 304	

Table 2-8: Equipment List - Amoco Ethanol Plant (Cont)

Qty.	Equipment	Description	HP
1	T-401 Beer Heater	Shell & tube exchanger Duty: 8.5 MM Btu/hr Floating head design DP: 100 psig Material: SS 304	
1	T-402 Beer Preheater	Shell & tube exchanger Duty: 17 MM Btu/hr Floating head design DP: 100 psig Material: SS 304	
1	T-403 Rectifying Column Condenser	Shell & tube exchanger Duty: 40 MM Btu/hr Floating head design SS 304 tubes/CS shell	
1	T-404 Steam Ejector	Capacity: 40,000 lb/hr Motive steam	
1	T-405 Vapour Superheater	Shell & tube exchanger Duty: 2 MM Btu/hr SS 304 tubes/CS shell	
1	T-406 Regeneration Condenser	Shell & tube exchanger Duty: 4 MM Btu/hr SS 304 tubes/CS shell	
1	T-407 Product Condenser	Shell & tube exchanger Duty: 10 MM Btu/hr SS 304 tubes/CS shell	
1	P-401 Stillage Pump	Centrifugal Cap: 900 gpm Head: 200 ft Material: SS 316	75
1	P-402 Reflux Pump	Centrifugal Cap: 110 gpm Head: 100 ft Material: SS 316	7.5
1	P-403 Wash Pump	Centrifugal Cap: 20 gpm Head: 100 ft Material: SS 316	3
1	P-404 Fusel Oil Pump	Centrifugal Cap: 10 gpm Head: 50 ft Material: SS 316	2

Table 2-8: Equipment List - Amoco Ethanol Plant (Cont)

Qty.	Equipment	Description		HP
1	P-405 Vapour Blower	Rotary blower Cap: Discharge:	 4000 cfm 5 psig	30
1	P-406 Regeneration Blower	Rotary blower Cap: Discharge:	 1000 cfm 5 psig	10
1	P-407 Regeneration Pump	Centrifugal Cap: Head: Material:	 20 gpm 75 ft SS 316	1.5
1	P-408 Rerun Pump	Centrifugal Cap: Head: Material:	 10 gpm 100 ft Carbon steel	3
1	P-409 Alcohol Transfer Pump	Centrifugal Cap: Head: Material:	 200 gpm 75 ft Carbon steel	7.5
3	P-410 A,B,C Alcohol Loading Pump	Centrifugal Cap: Head: Material:	 300 gpm 100 ft Carbon steel	15 (ea)
1	P-411 Denaturant Pump	Centrifugal Cap: Head: Material:	 6 gpm 75 ft Carbon steel	5
1	P-412 Denaturant Unloading Pump	Centrifugal Cap: Head:	 150 gpm 50 ft	5
1	M-401 Stillage Flash Tank	Cap: Material: DP:	6000 gal. 9' dia. x 13' T/T SS 304 Full vacuum	
1	M-402 Fo. Wash Tank	Cap: Material: DP:	300 gal. 42" dia. x 54" T/T SS 304 Atmospheric	
1	M-403 Fusel Oil Tank	Cap: Material: DP:	1100 gal. 5' dia. x 8' T/T Carbon steel Atmospheric	

Table 2-8: Equipment List - Amoco Ethanol Plant (Cont)

Qty.	Equipment	Description	HP
2	M-404 A & B Mol Sieve Beds	Cap: 600 ft^3 7' dia. x 18' T/T Material: Carbon steel C/W internal distributors & support trays DP: 14 psig	
1	M-405 Regeneration Tank	Cap: 1000 gal. 5' dia. x 7' T/T Material: SS 304 DP: Atmospheric	
2	Q-401 A & B Alcohol Day Tanks	Cap: 80,000 gal. 20' dia. x 34' T/T Material: Carbon steel DP: Atmospheric	
1	Q-402 Alcohol Storage Tank	Cap: 800,000 gal. 55' dia. x 45' T/T Float roof design Material: Carbon steel DP: Atmospheric	
1	Q-403 Denaturant Tank	Cap: 40,000 gal. 16' dia. x 26' T/T Material: Carbon steel DP: Atmospheric	
1	V-401 In-line Mixer	Static Mixer 6" dia. x 4' length	
500 Area: Stillage Handling			
1	V-501 Stillage Tank Agitator	Side mounted agitator Wetted parts SS 304	25
3	V-502 A,B,C Centrifuges	Alfa laval super-d-canter SG-16 Cap: 300 gpm	250 (ea)
3	V-503 A,B,C Rotary Filters	Rotary vacuum filter C/W auxiliary systems	25 (ea)
1	V-504 Recycle Stillage Tank Agitator	Side mounted agitator Wetted parts SS 304	3
1	V-505 Waste Tank Agitator	Side mounted agitator Wetted parts SS 304	5
1	W-501 A,B,C Filter Conveyors	Cap: 9 ton/hr	10 (ea)
1	W-502 Cake Belt Conveyor	Belt Conveyor Cap: 26 ton/hr 250 ft length	15

Table 2-8: Equipment List - Amoco Ethanol Plant (Cont)

Qty.	Equipment	Description	HP
3	W-503 A,B,C Centrifugal Conveyors	Cap: 15 ton/hr	15 (ea)
1	P-501 Filter Feed Pump	Centrifugal Cap: 900 gpm Head: 100 ft Material: SS 316	40
1	P-502 Filtrate Pump	Centrifugal Cap: 80 gpm Head: 150 ft Material: SS 316	10
1	P-503 Recycle Stillage Pump	Centrifugal Cap: 100 gpm Head: 150 ft Material: SS 316	10
3	P-504 A,B,C Filter Vacuum Pumps	Liquid ring vacuum pump Cap: 600 cfm C/W separator tank, skid assembly	400 (ea)
1	P-505 Waste Liquid Pump	Centrifugal Cap: 800 gpm Head: 150 ft Material: SS 316	40
1	T-501 Stillage Cooler	Shell & tube exchanger Surf. area: 1,350 ft^2 Material: SS 304 tubes/CS shell DP: 100 psig	
1	T-502 Recycle Cooler	Shell & tube exchanger Surf. area: 850 ft^2 Material: SS 304 tubes/CS shell DP: 100 psig	
1	M-501 Stillage Tank	Cap: 25,000 gal. 15' dia. x 20' T/T Material: SS 304 DP: Atmospheric	
1	M-502 Recycle Stillage Tank	Cap: 5,000 gal. 8' dia. x 13' T/T Material: SS 304 DP: Atmospheric	
1	M-503 Waste Liquid Tank	Cap: 12,000 gal. 11' dia. x 17' T/T Material: SS 304 DP: Atmospheric	

Table 2-8: Equipment List - Amoco Ethanol Plant (Cont)

Qty.	Equipment	Description	HP
600 Area: chemicals & CIP			
1	V-601 Spent CIP Agitator	Side mounted agitator Material: SS 316 wetted parts	5
1	V-602 CIP Tank Agitator	Side mounted agitator Material: SS 316 wetted parts	10
1	V-603 Nutrient Mix Tank Agitator	Top entry agitator Material: SS 316 wetted parts	5
1	V-604 In-line Mixer	Static mixed 2" diameter Material: SS 304	
1	V-605 Lime Tank Agitator	Bottom side mounted agitator Material: Carbon steel	5
1	W-601 Lime Conveyor	Screw Conveyor 4" diameter - 15' length Material: Carbon steel	1.5
1	W-602 Lime Unloading Elevator	Bucket elevator 15 ton/hr 30' height Material: Carbon steel	3
1	P-601 CIP Pump	Centrifugal Cap: 300 gpm Head: 150 ft Material: SS 316	20
1	P-602 Caustic Pump	Centrifugal Cap: 50 gpm Head: 50 ft Material: Carbon steel	20
1	P-603 Caustic Unloading Pump	Centrifugal Cap: 150 gpm Head: 50 ft Material: Carbon steel	3
1	P-604 Nutrient Pump	Centrifugal Cap: 10 gpm Head: 75 ft Material: SS 316	2
1	P-605 Steep Liquor Pump	Centrifugal Cap: 50 gpm Head: 50 ft Material: SS 316	1.5

Table 2-8: Equipment List - Amoco Ethanol Plant (Cont)

Qty.	Equipment	Description		HP
1	P-606 Steep Liquor Unloading Pump	Centrifugal Cap: Head: Material:	 150 gpm 50 ft SS 316	3
1	P-607 Syrup Pump	Centrifugal Cap: Head: Material:	 50 gpm 75 ft Carbon steel	2
1	P-608 Phosphoric Acid Pump	Metering pump Cap: Material:	 1 gpm Carbon steel	0.5
1	P-609 Ammonia Pump	Metering pump Cap: Material:	 1 gpm Carbon steel	0.5
1	P-610 Ammonia Unloading Pump	Centrifugal Cap: Head: Material:	 150 gpm 50 ft Carbon steel	3
1	P-611 Sulphuric Acid Pump	Metering pump Cap: Material:	 0.75 gpm Carbon steel	0.5
1	P-612 Acid Unloading Pump	Centrifugal Cap: Head: Material:	 150 gpm 50 ft Carbon steel	3
1	P-613 Lime Slurry Pump	Centrifugal Cap: Head: Material:	 3 gpm 100 ft Carbon steel	2
1	P-614 Syrup Unloading Pump	Centrifugal Cap: Head: Material:	 150 gpm 50 ft Carbon steel	3
1	Q-601 Spent CIP Tank	Cap: Material: DP:	6,000 gal. 9' dia. x 12' T/T SS 304 Atmospheric	
1	Q-602 CIP Tank	Cap: Material: DP:	6,000 gal. 9' dia. x 12' T/T Carbon steel Atmospheric	

Table 2-8: Equipment List - Amoco Ethanol Plant (Cont)

Qty.	Equipment	Description	HP
1	Q-603 Caustic Storage Tank	Cap: 7,500 gal. 10' dia. x 13' T/T Material: Carbon steel DP: Atmospheric	
2	M-604 Nutrient Mix Tank	Cap: 1,500 gal. 5'-6" dia. x 9' T/T Material: SS 304 DP: Atmospheric	
1	Q-605 Steep Liquor Tank	Cap: 15,000 gal. 12' dia. x 18' T/T Material: SS 316 DP: Atmospheric C/W internal steam coil	
1	Q-606 Syrup Tank	Cap: 15,000 gal. 12' dia. x 18' T/T Material: Carbon steel DP: Atmospheric C/W internal steam coil	
1	Q-607 Aqueous Ammonia Tank	Cap: 6,000 gal. 9' dia. x 12' T/T Material: Carbon steel DP: 5 psig C/W water wash fume scrubber 12" dia. column	
1	Q-608 Acid Tank	Cap: 6,000 gal. 9' dia. x 12' T/T 1,000 BTM core Material: Carbon steel DP: Atmospheric	
1	M-609 Lime Mix Tank	Cap: 3,000 gal. 8' dia. x 8' T/T Material: Carbon steel DP: Atmospheric	
1	M-610 Lime Storage Silo	Cap: 1,200 cubic ft 10' dia. x 15' T/T Material: Carbon steel DP: Atmospheric	

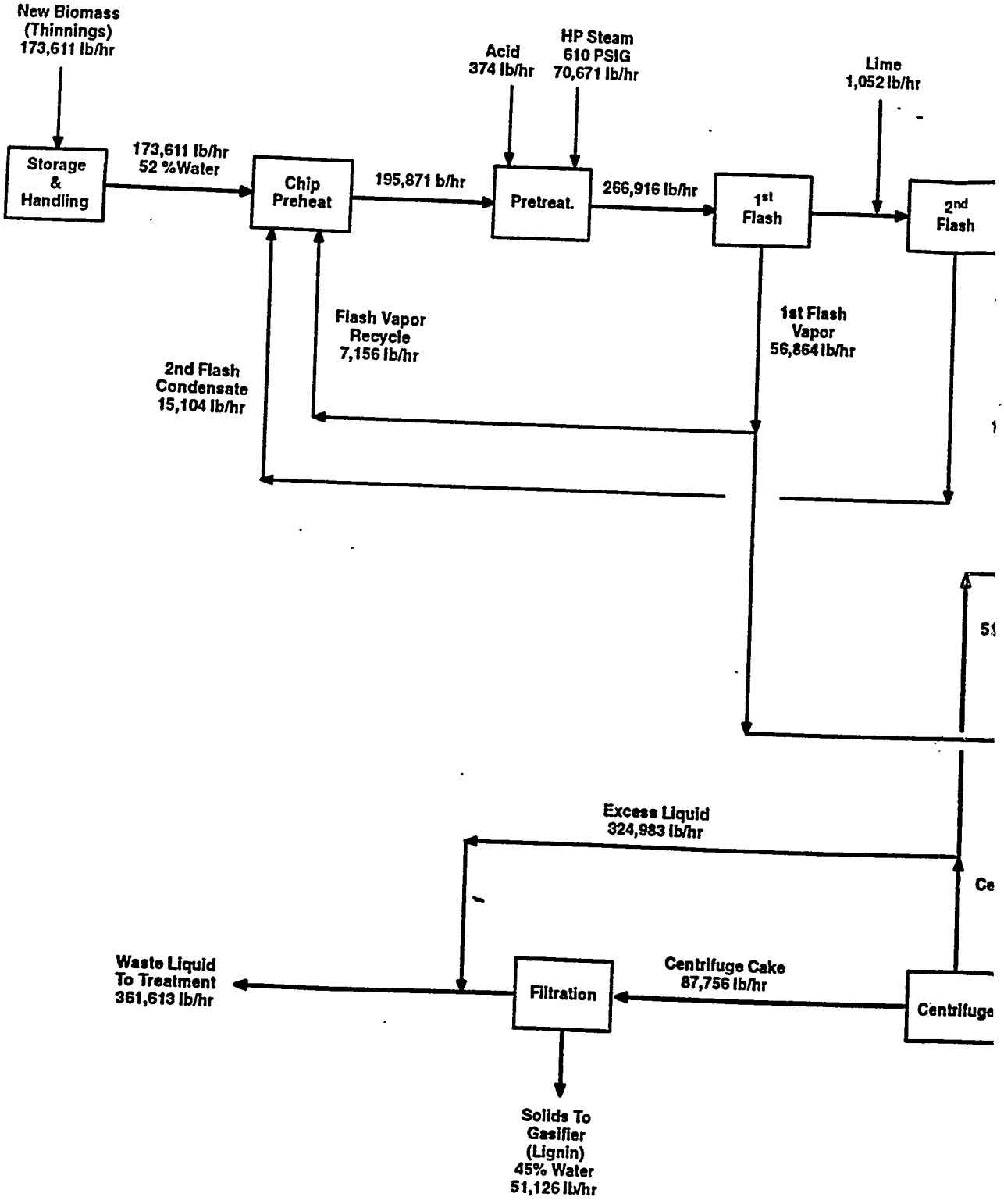
New Biomass
(Thinnings)
173,611 lb/hr
Storage
&
Handling
173,611 lb/hr
52 %Water
Chip
Preheat
195,871 b/hr
Acid
374 lb/hr
HP Steam
610 PSIG
70,671 lb/hr
Pretreat.
266,916 lb/hr
1st
Flash
Lime
1,052 lb/hr
2nd
Flash
Flash Vapor
Recycle
7,156 lb/hr
2nd Flash
Condensate
15,104 lb/hr
1st Flash
Vapor
56,864 lb/hr
Excess Liquid
324,983 lb/hr
Waste Liquid
To Treatment
361,613 lb/hr
Filtration
Centrifuge Cake
87,756 lb/hr
Centrifuge
Solids To
Gasifier
(Lignin)
45% Water
51,126 lb/hr

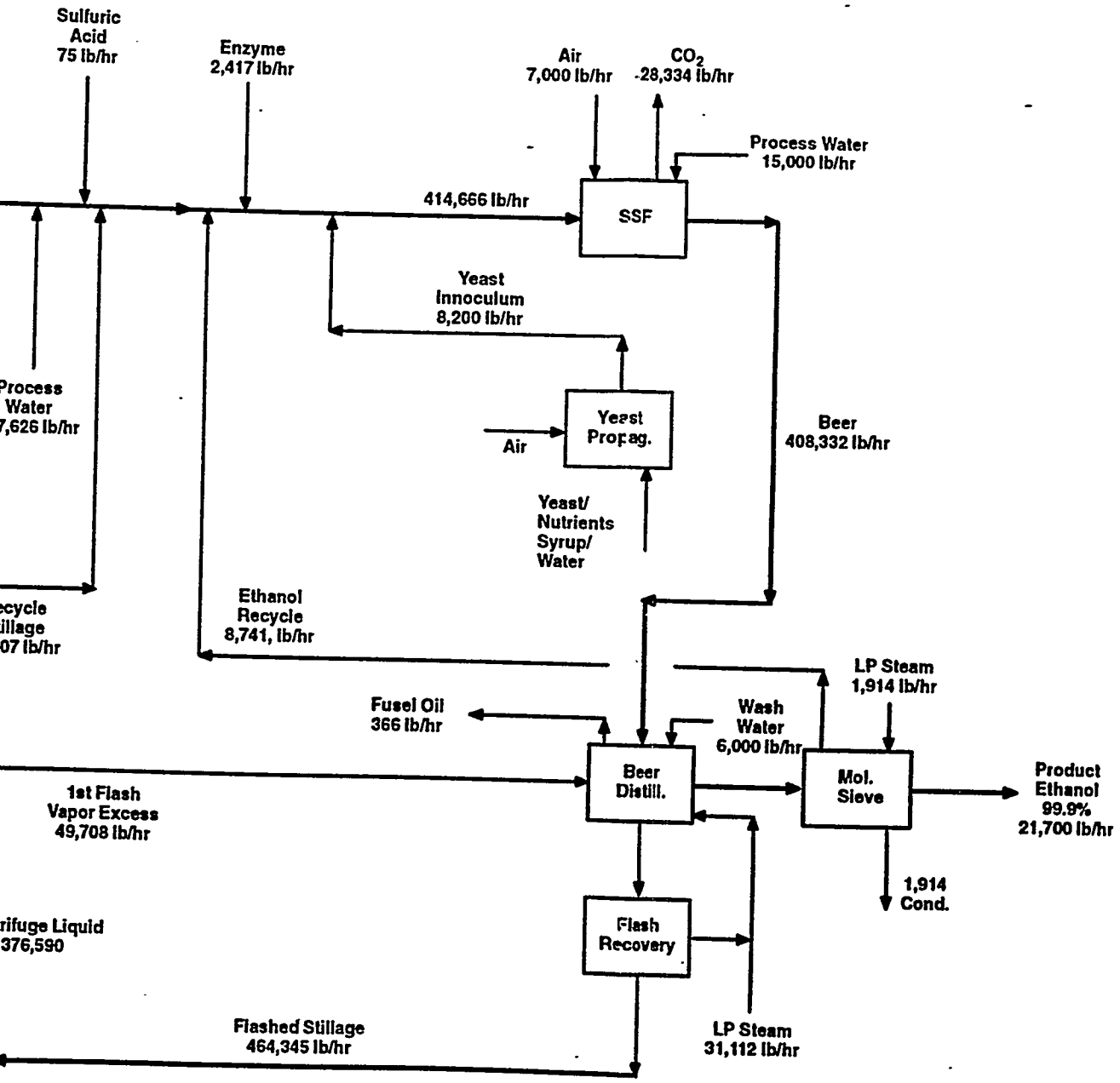

Figure 2–4
Block Flow Diagram
Amoco Ethanol Plant

M-201 CHIP BIN

V-201 CHIP METER

V-202 CHIP FEEDER

V-204 HYDROLYZER FEEDER

V-203 CHIP PREHEATER

V-205 PRETREATMENT HYDROLYZER

M-202 H.P. FLASH TANK

V-206 L.P. FLASH FEEDER

M-203 L.P. FLASH TANK

V-207 CONVEYOR FEEDER

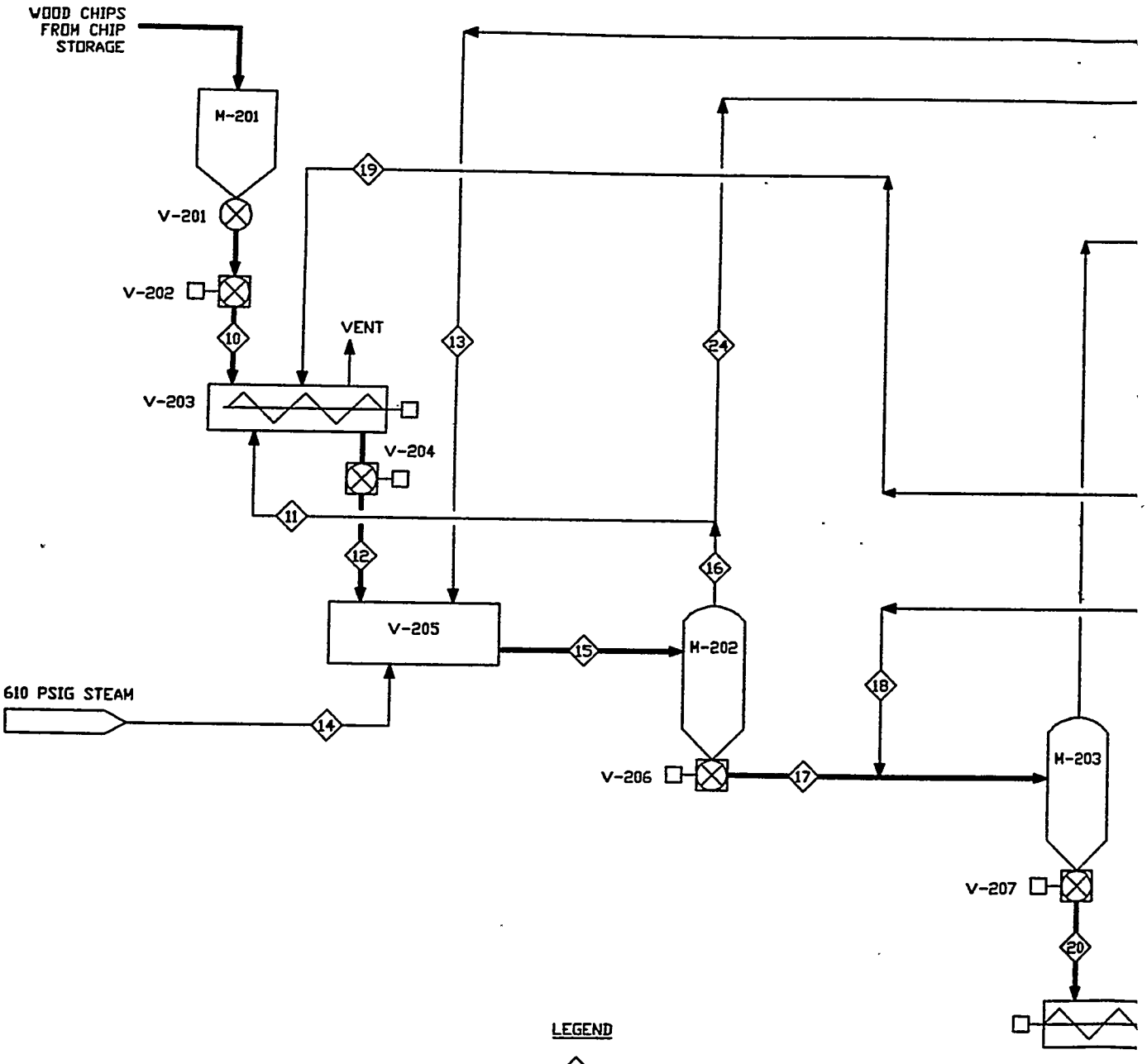

LEGEND

◇ STREAM NUMBER

CWS COOLING WATER SUPPLY
CHWS CHILLED WATER SUPPLY
CHWR CHILLED WATER RETURN

PLOT 12/12

WEYB201

ISSUED									CHKD	CORRECT						ISSUED									CHKD	CORRECT						ISSUED	
DESCRIPTION										APPR.	DATE	DESCRIPTION										APPR.	DATE	DESCRIPTI									
PC	ARCH	CIVIL	CONC	STL	L&P	ELEC	MECH	P.S.	S.A.	FAC	ELEC	LTG	MATL	PC	ARCH	CIVIL	CONC	STL	L&P	ELEC	MECH	P.S.	S.A.	FAC	ELEC	LTG	MATL	PC	ARCH	CIVIL	CONC	STL	

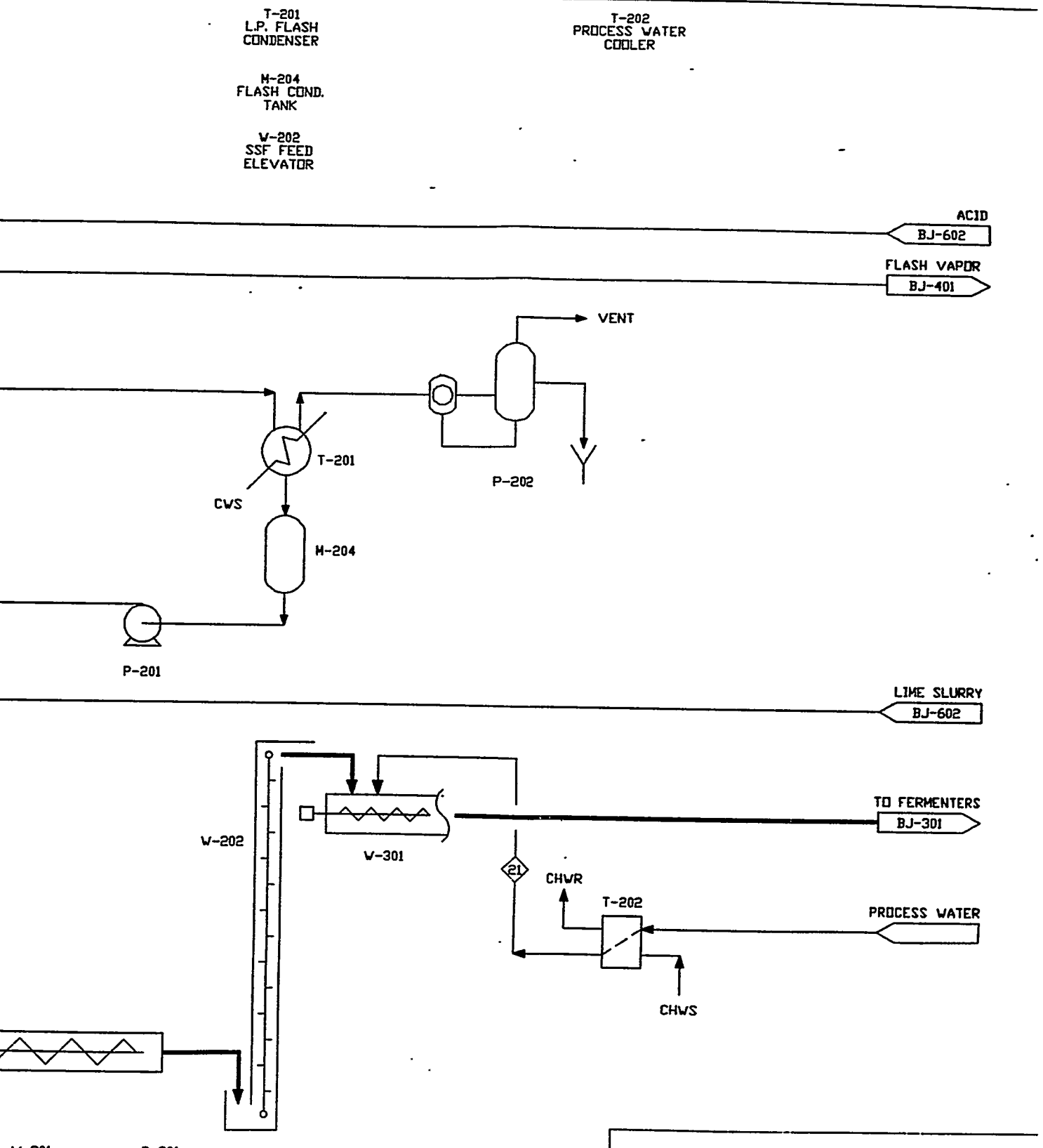

Figure 2-5
Ethanol Plant - Process Flow Diagram
Pretreatment

NOV. 1994

DRAWING NUMBER 04996.00-BJ-201-1

DESIGNED BY: DS DRAWN BY: LEC

AREAS | LEVELS | WORK PKG

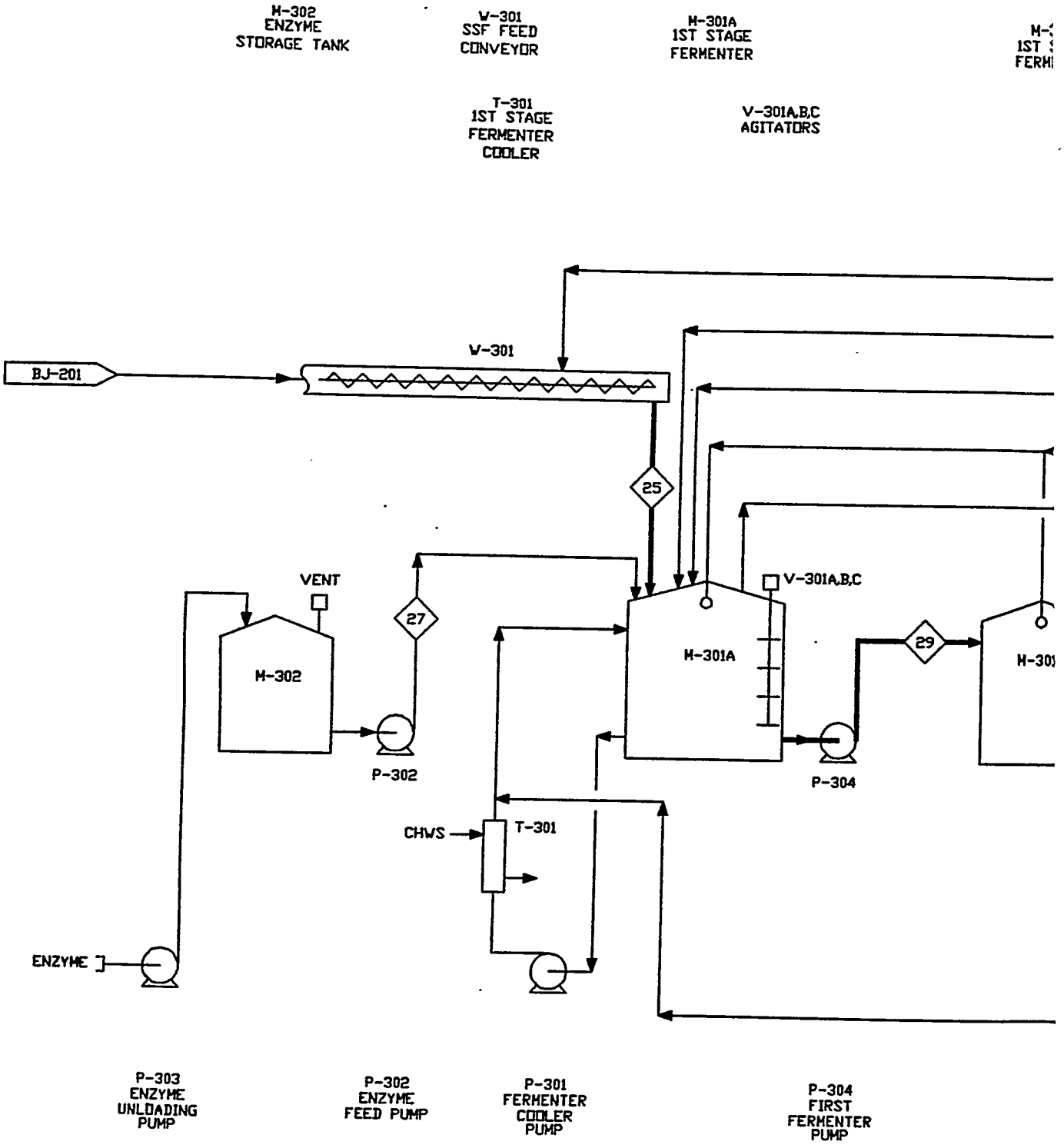

PLOT 1/6 WEYB301

ISSUE	DESCRIPTION								CHKD	CORRECT					ISSUE	DESCRIPTION								CHKD	CORRECT					ISSUE	DESCRIPT
PC	ARCH	CIVIL	CONC	STL	L&P	INST	MB	P.E.	S.A.	FAC	ELEC	LTG	MATL	PC	ARCH	CIVIL	CONC	STL	L&P	INST	MB	P.E.	S.A.	FAC	ELEC	LTG	MATL	PC	ARCH	CIVIL	CONC	STL

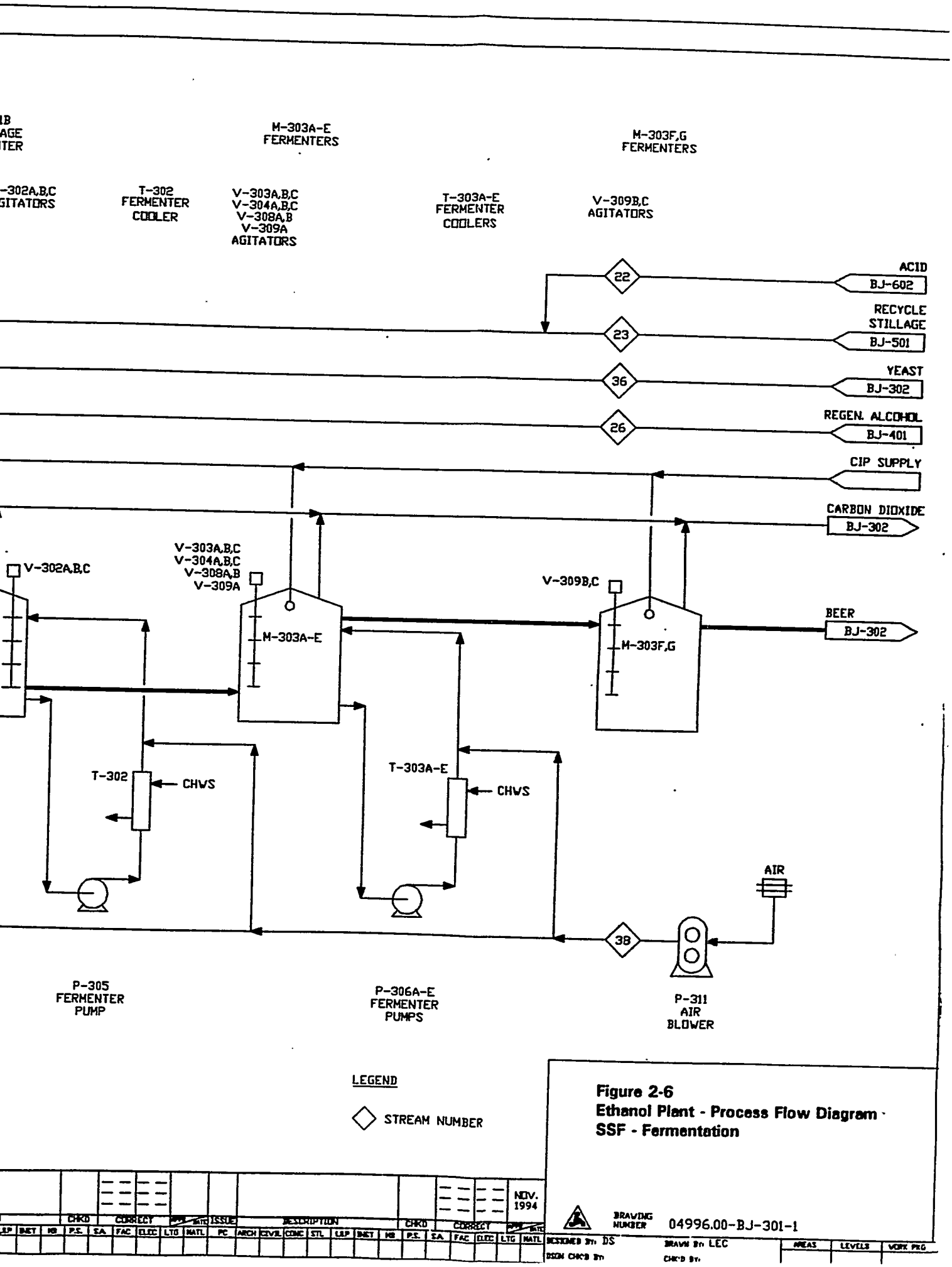

Figure 2-6
Ethanol Plant - Process Flow Diagram
SSF - Fermentation

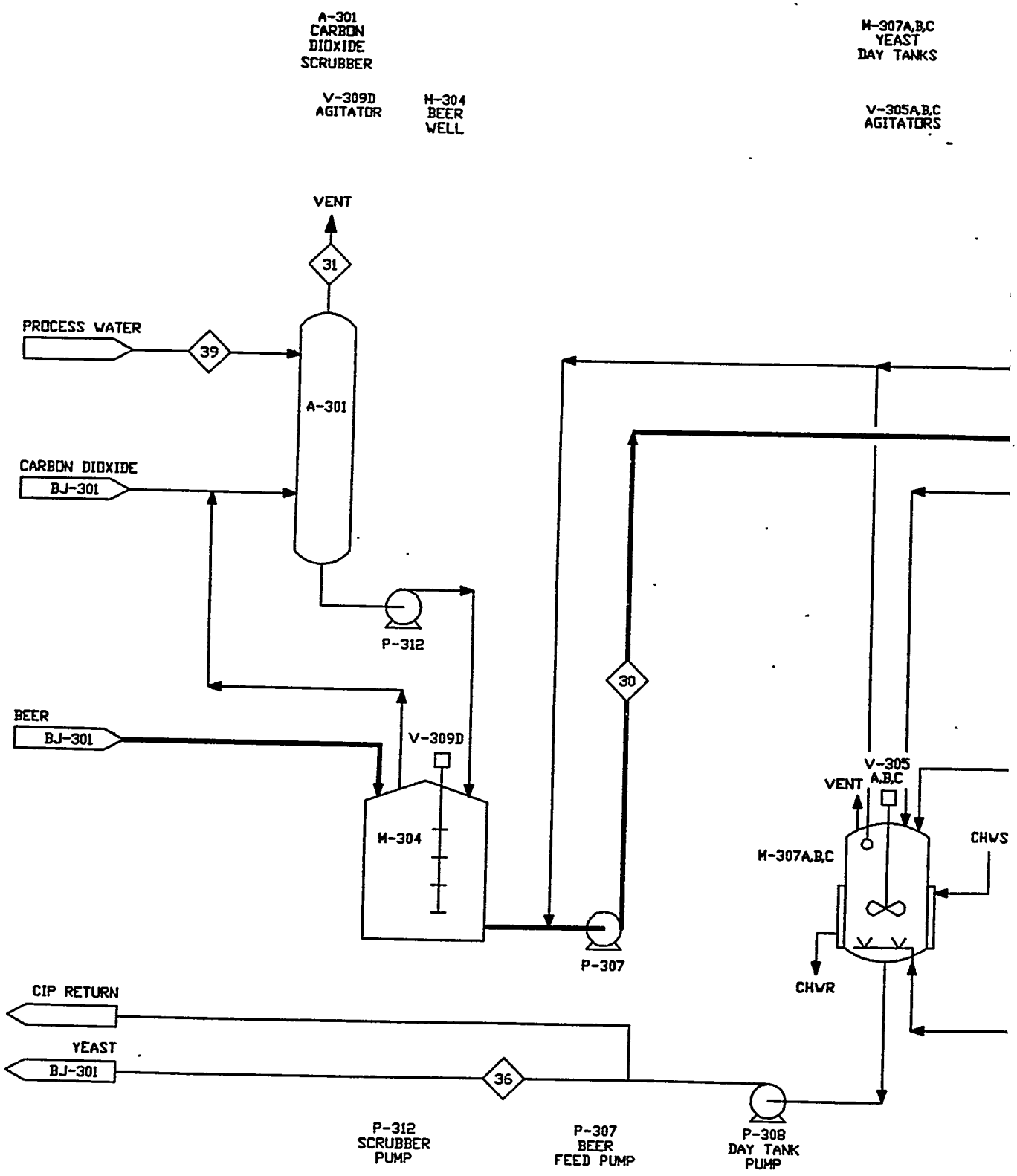

PLOT 1/6 WEYB302

ISSUE	DESCRIPTION								CHKD	CORRECT					ISSUE	DESCRIPTION								CHKD	CORRECT					ISSUE	DESCRIP
PC	ARCH	CIVIL	CONC	STL	L&P	INST	MB	P.E.	S.A.	FAC	ELEC	LTG	MATL		PC	ARCH	CIVIL	CONC	STL	L&P	INST	MB	P.E.	S.A.	FAC	ELEC	LTG	MATL		PC	ARCH	CIVIL	CONC	ST

LEGEND

◇ STREAM NUMBER

Figure 2-7
Ethanol Plant - Process Flow Diagram
Fermentation Yeast Propagation

NOV. 1994

DRAWING NUMBER 04996.00-BJ-302-1

DESIGNED BY DS

DRAWN BY LEC

DSGN CHK'D BY

CHK'D BY

AREAS	LEVELS	WORK PKG

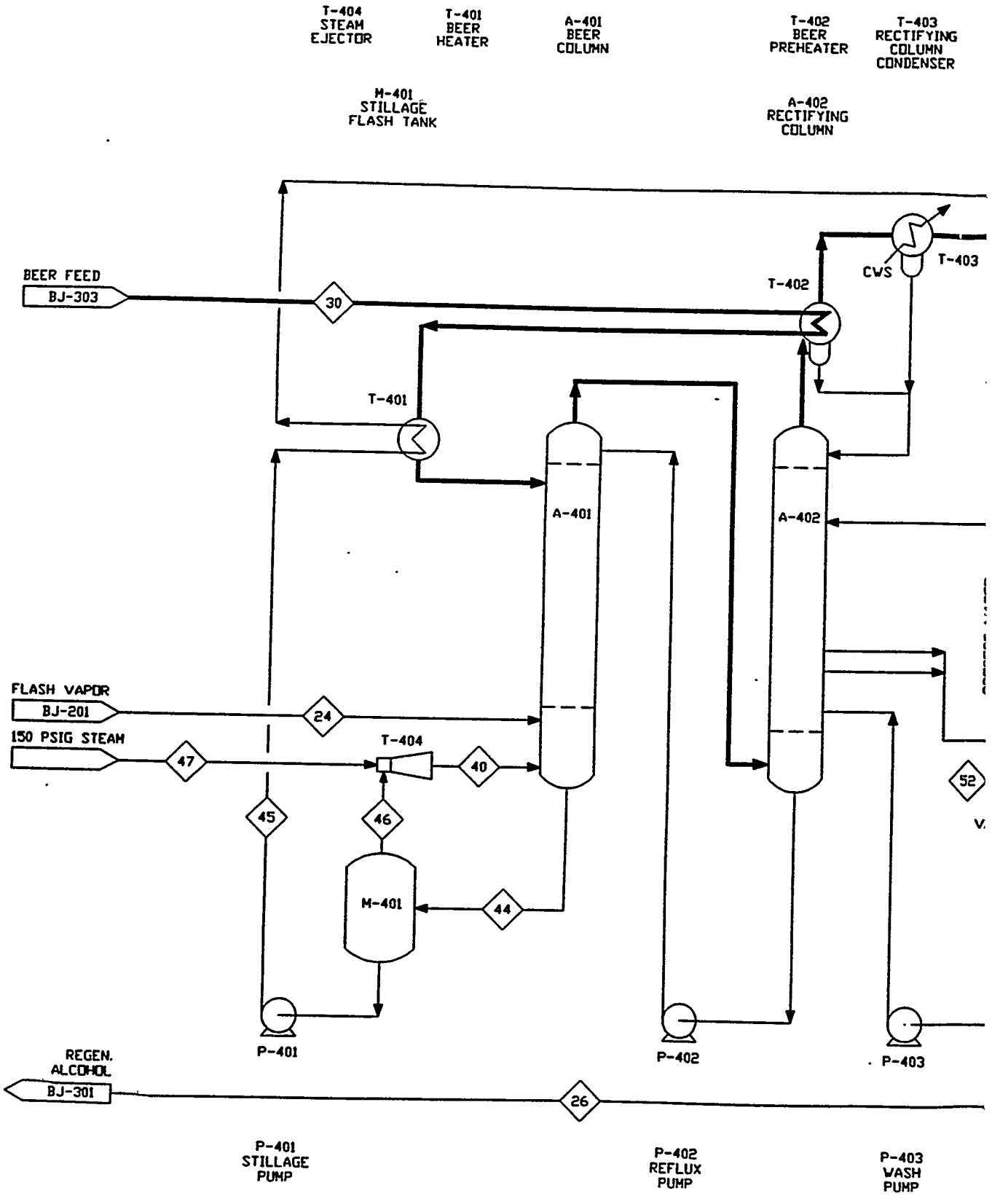

PLOT
12/28

WEYB401

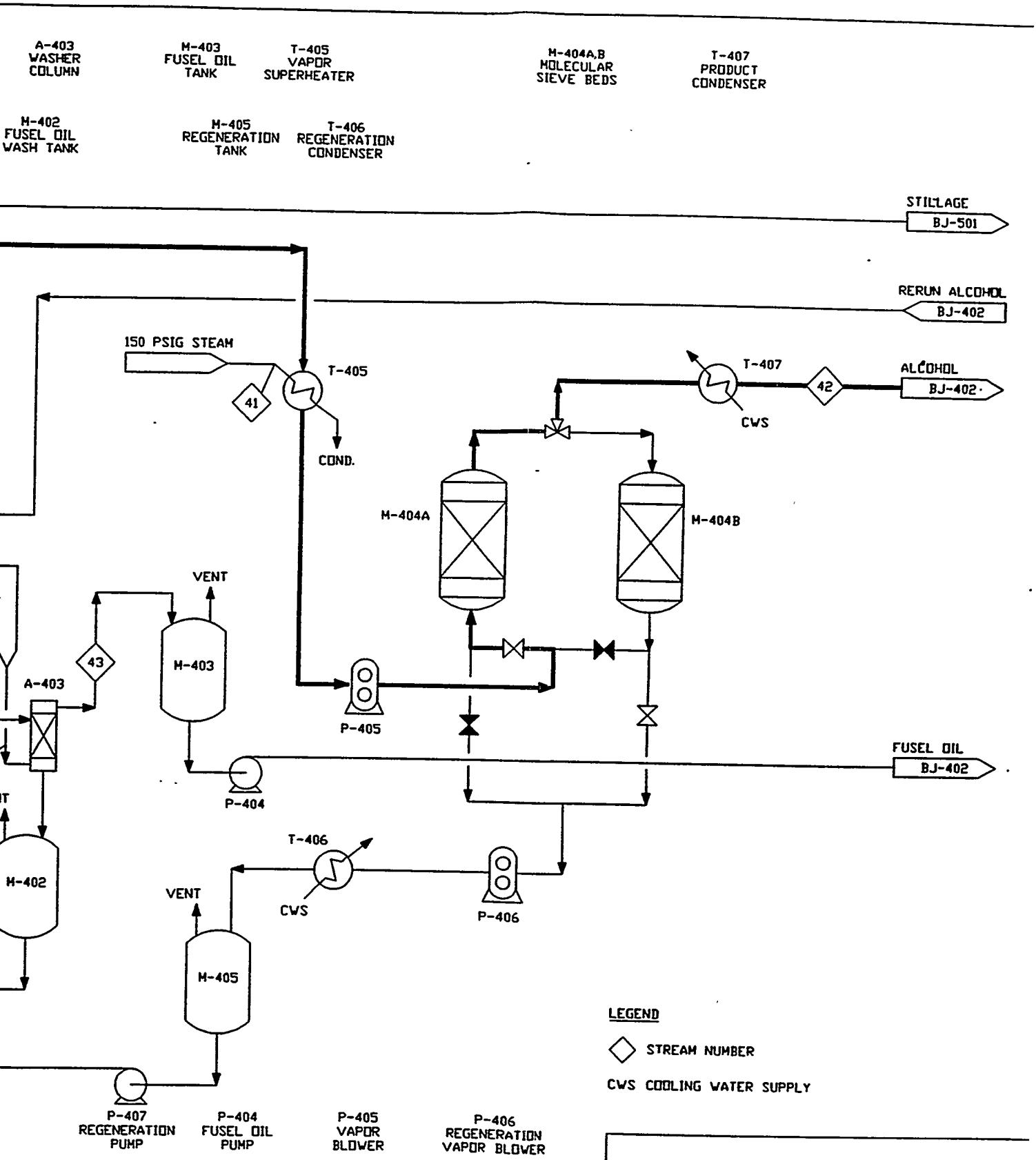

Figure 2-8
Ethanol Plant - Process Flow Diagram
Distillation & Dehydration

NOV. 1994

DRAWING NUMBER 04996.00-BJ-401-1

DESIGNED BY: DS DRAWN BY: LEC

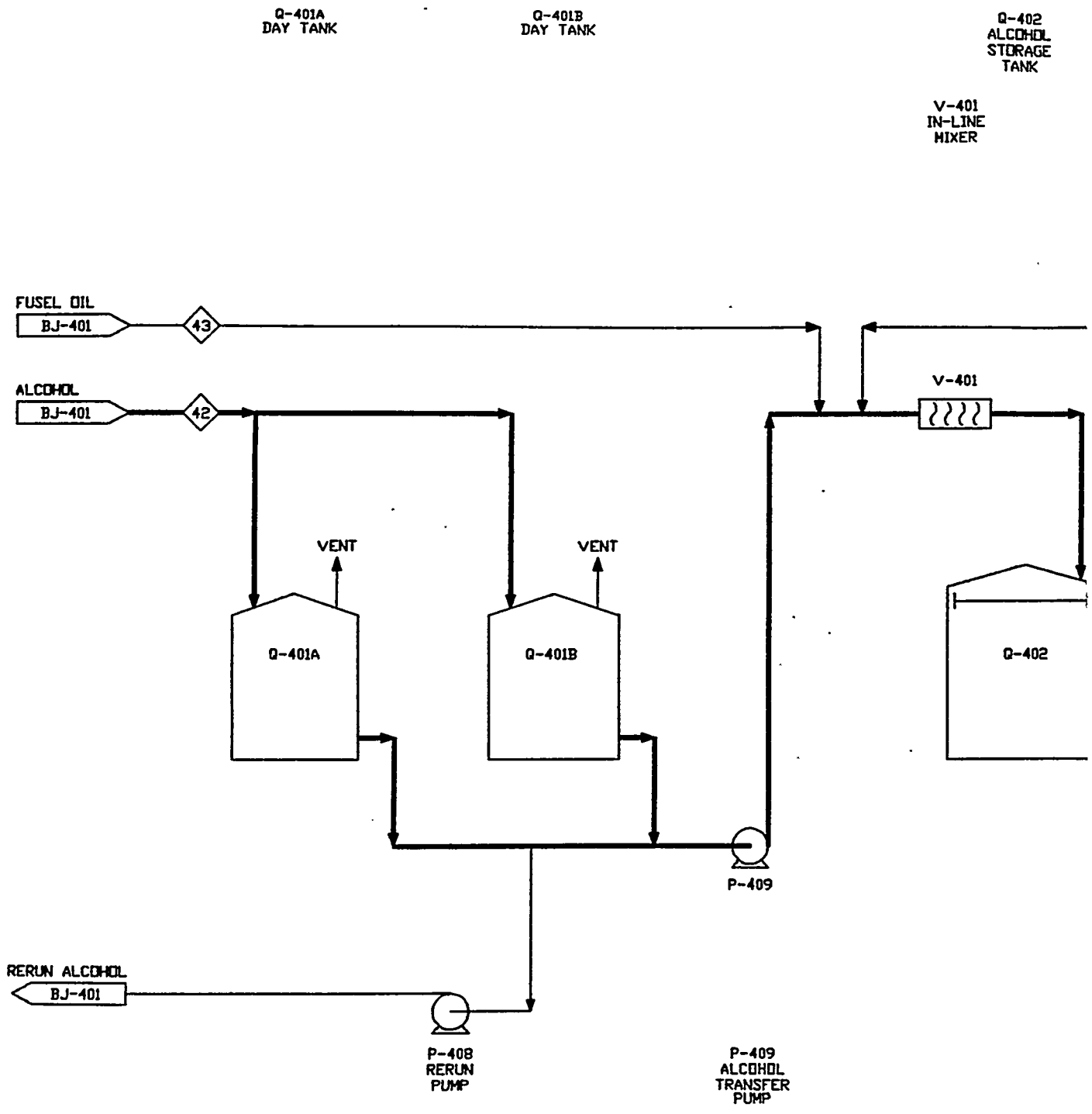

PLOT
1/6

WEYB402

ISSUE	DESCRIPTION								CHKD	CORRECT			APPR	MFG	ISSUE	DESCRIPTION								CHKD	CORRECT			APPR	MFG	ISSUE	DESCRIPT
PC	ARCH	CIVIL	CONC	STL	L&P	ELEC	MB		P.E.	S.A.	FAC	ELEC	LTG	MATL	PC	ARCH	CIVIL	CONC	STL	L&P	ELEC	MB		P.E.	S.A.	FAC	ELEC	LTG	MATL	PC	ARCH	CIVIL	CONC	STL

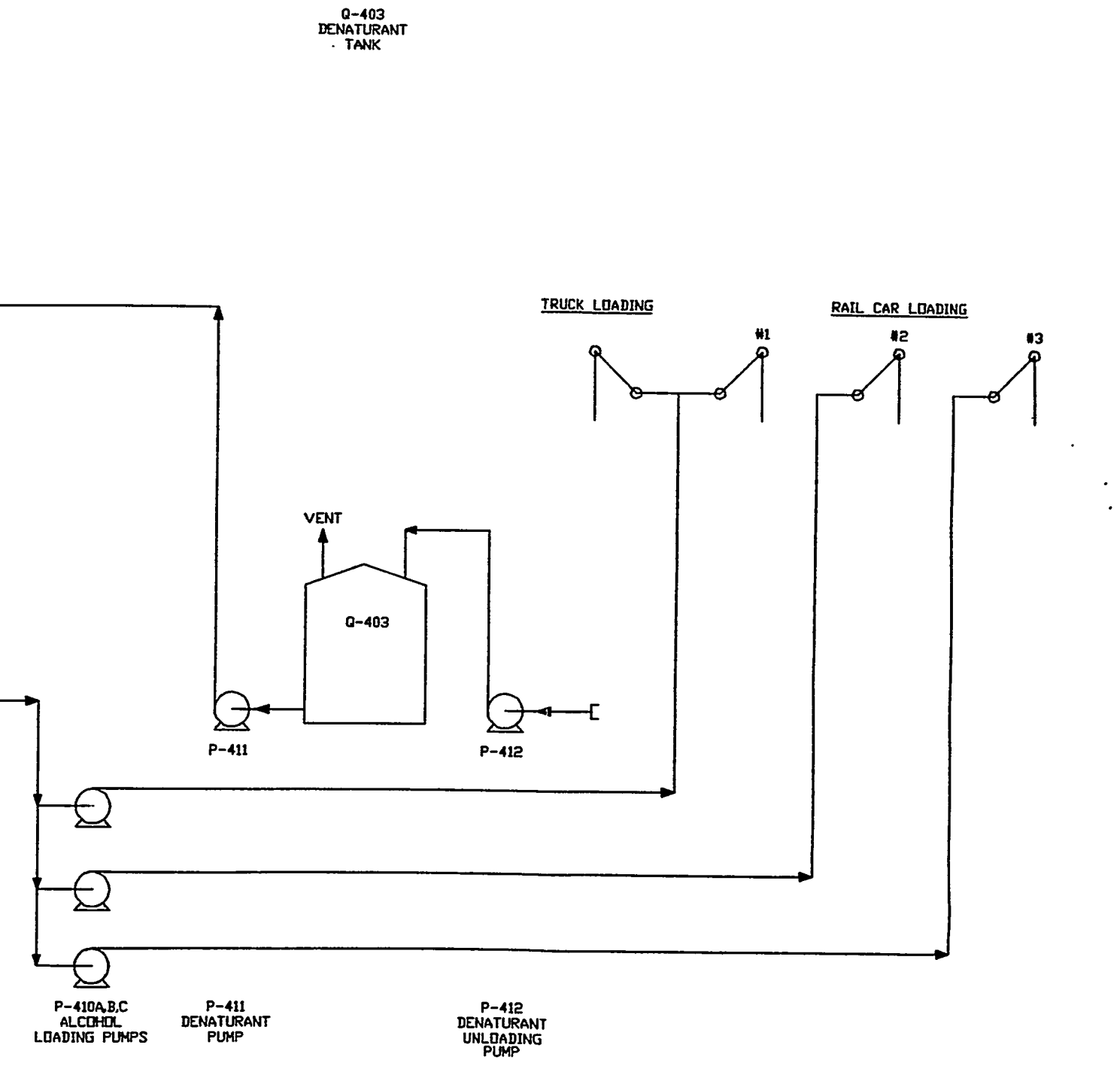

LEGEND

◇ STREAM NUMBER

Figure 2-9
Ethanol Plant - Process Flow Diagram
Alcohol Storage

NOV. 1994

DRAWING NUMBER 04996.00-BJ-402-1

DESIGNED BY: DS DRAWN BY: LEC

AREAS | LEVELS | WORK PKG

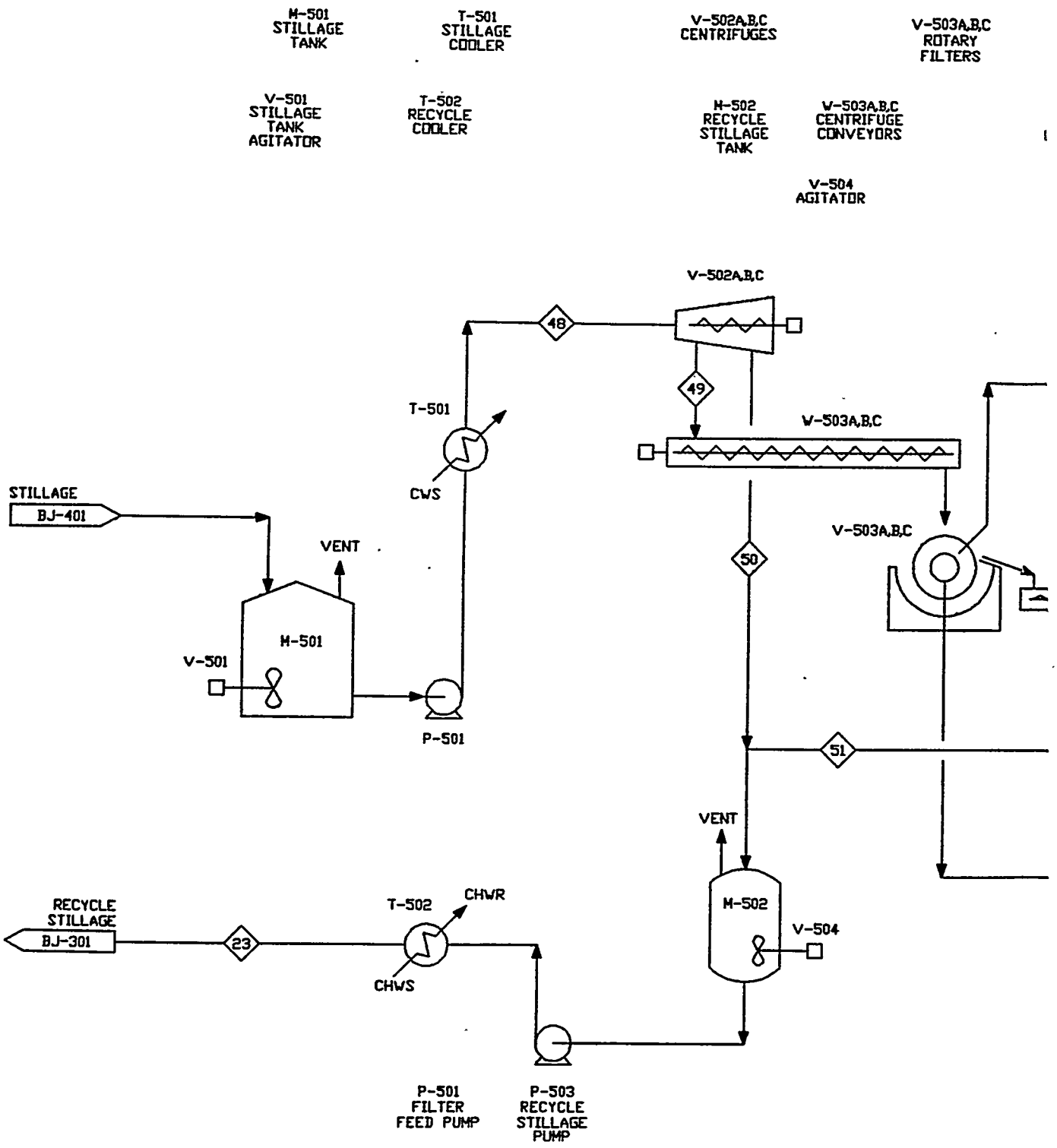

PLOT 1/6

WEYB501

ISSUE	DESCRIPTION								CHKD	CORRECT					ISSUE	DESCRIPTION								CHKD	CORRECT					ISSUE	DESCRIP
PC	ARCH	CIVIL	CONC	STL	L&P	ENET	MB	P.E.	S.A.	FAC	ELEC	LTG	MATL	PC	ARCH	CIVIL	CONC	STL	L&P	ENET	MB	P.E.	S.A.	FAC	ELEC	LTG	MATL	PC	ARCH	CIVIL	CONC	ST

Figure 2-10
Ethanol Plant - Process Flow Diagram
Stillage Handling

NOV. 1994

DRAWING NUMBER 04996.00-BJ-501-1

DESIGNED BY: DS
DRAWN BY: LEC

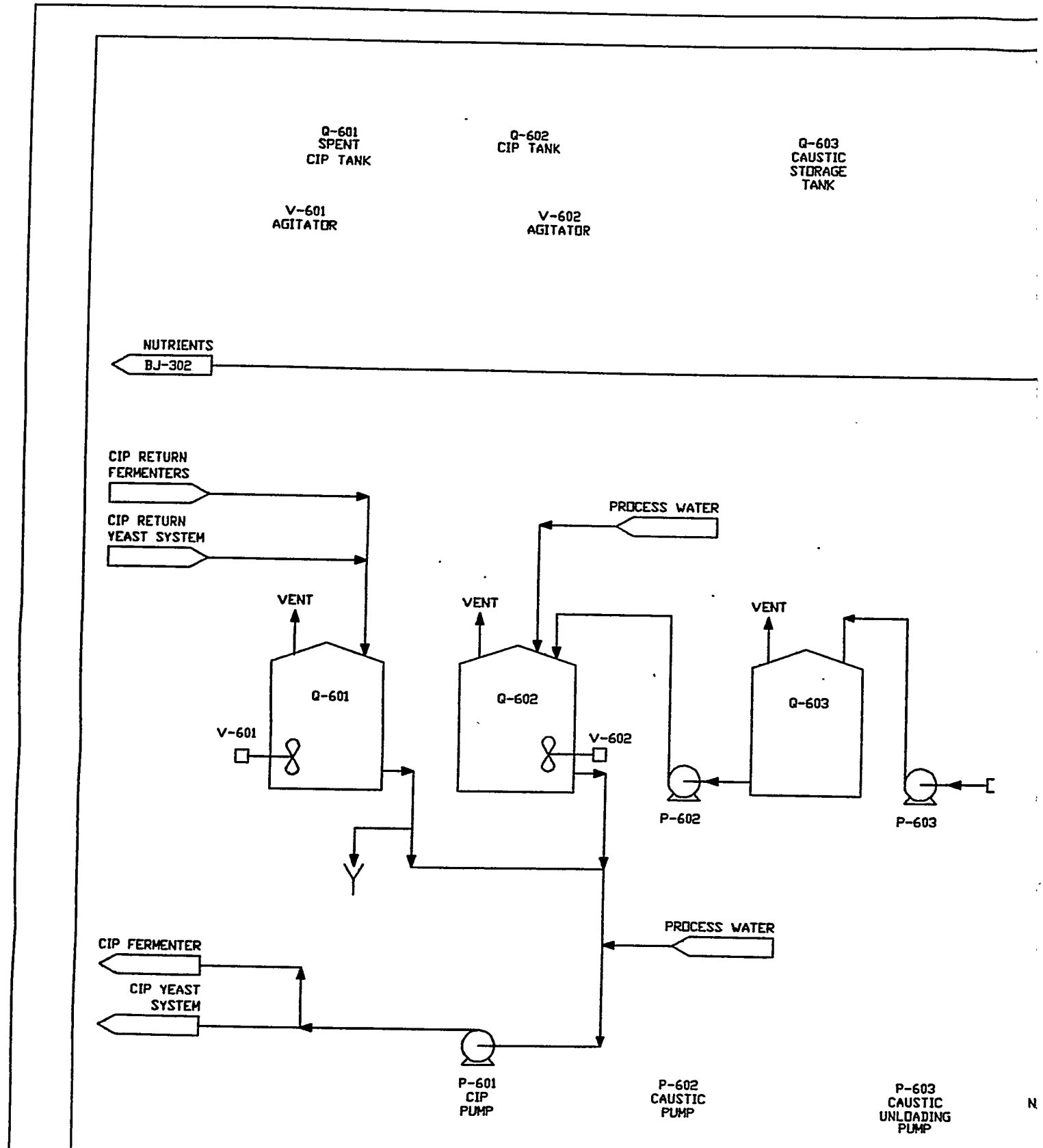

PLOT 1/6

WEYB601

ISSUE	DESCRIPTION								CHKD	CORRECT				DWN	DATE	ISSUE	DESCRIPTION								CHKD	CORRECT				DWN	DATE	ISSUE	DESCRIPTION
PC	ARCH	CIVIL	CONC	STL	L&P	INST	MB	P.E.	S.A.	FAC	ELEC	LTG	MATL			PC	ARCH	CIVIL	CONC	STL	L&P	INST	MB	P.E.	S.A.	FAC	ELEC	LTG	MATL			PC	ARCH	CIVIL	CONC

Figure 2-11
Ethanol Plant - Process Flow Diagram
CIP & Nutrients

NOV. 1994

DRAWING NUMBER 04996.00-BJ-601-1

DESIGNED BY: DS DRAWN BY: LEC

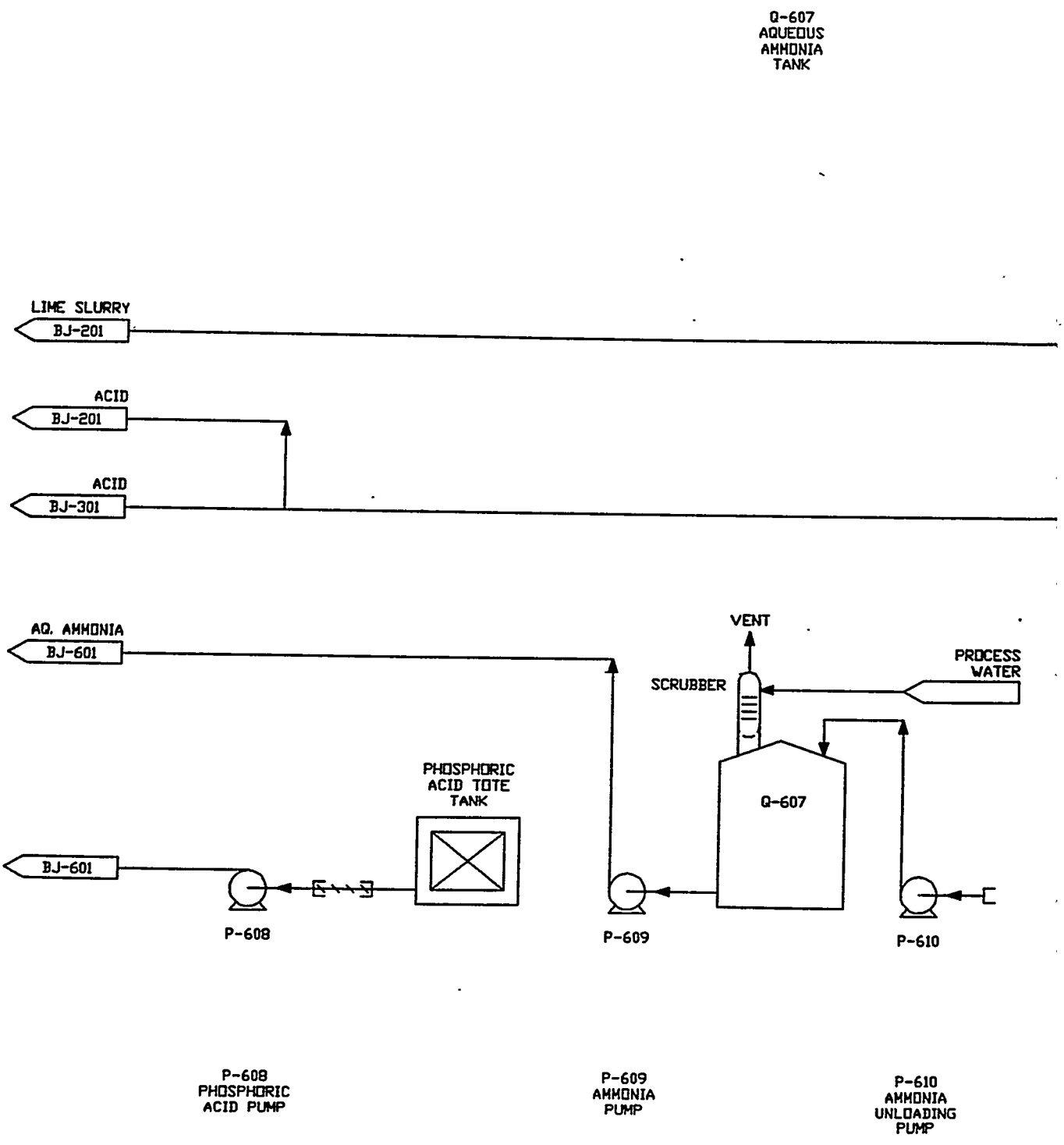

PLOT 12/12

WEYB602

ISSUE	DESCRIPTION								CHKD	CORRECT					ISSUE	DESCRIPTION								CHKD	CORRECT					ISSUE	DESCR
PC	ARCH	CIVIL	CONC	STL	L&P	ENST	MD	P.S.	S.A.	FAC	ELEC	LTG	MATL	PC	ARCH	CIVIL	CONC	STL	L&P	ENST	MD	P.S.	S.A.	FAC	ELEC	LTG	MATL	PC	ARCH	CIVIL	CONC

Figure 2-12
Ethanol Plant - Process Flow Diagram
Chemical Storage

NOV. 1994

DRAWING NUMBER 04996.00-BJ-602-1

DESIGNED BY: DS
DRAWN BY: LEC
DSGN CHK'D BY:
CHK'D BY:
AREAS | LEVELS | WORK PK

2.4 Material Handling Systems

Neither TPS, Tampella, nor Amoco included material handling in the scopes of supply. Therefore, Stone & Webster worked with Weyerhaeuser and equipment vendors to lay out and estimate the cost of the material handling equipment. The material handling systems receive, store, and handle the raw biomass feed as well as the dolomite, ash, stillage, and bed sand as each particular case requires. For the most part, the feedstock handling systems for all of the cases are identical and differ predominately in the capacities of the systems. Other differences in the feedstock handling result from specific details in the feed arrangements for the dryers, gasifier, or ethanol feedstock pretreatment system.

This section provides the design philosophies used to size and cost the material handling equipment for the Tampella Flue Gas Drying and Steam Drying BGCC designs, the TPS BGCC design and the ethanol plant combined with a Tampella BGCC plant. Equipment lists are provided in Table 2-9 through Table 2-16. Using this information, costs were subsequently developed for a "stand alone" ethanol plant (i.e., without a BGCC plant).

The proposed material handling systems for the BGCC plant at the New Bern Mill integrate the existing hogged fuel handling equipment with new equipment required for the receiving, storing, handling and drying of biomass feedstock. As shown on Figure 2-27 of Section 2.5, Plot Plan - BGCC Retrofit, the material handling equipment occupies a large area in the vicinity of the BGCC plant.

Similarly, the material handling equipment associated with the ethanol plant dominates the site plan as shown on Figure 2-28 of Section 2.5, Plot Plan - BGCC/Ethanol Retrofit. As shown on this plot plan, the ethanol plant is located on the south side of the New Bern Mill site, approximately 1,500 feet from the existing hog boiler and proposed BGCC plant site. Since the majority of the new material to be trucked in from off site is consumed in the ethanol plant, the new receiving stations are located close to the ethanol plant. A 1,900 foot long belt conveyor carries some of the new feedstock along with the lignin waste stream to the existing hogged fuel pile or the proposed BGCC plant.

The following functions are provided by the material handling systems to support operation of the BGCC or ethanol plants independently, or in combination with each other:

- Transfer of hogged fuel produced by the mill's existing system to the BGCC plant's wet storage pile.
- Weighing and receiving of new feedstock trucked in from remote sources.
- Removal of metal objects, screening and hogging of new feedstock.
- Transfer of lignin stillage material from the ethanol plant to BGCC or hog fuel boiler storage pile.
- Mixing of material from the existing mill bark handling system with new processed wet fuel (for BGCC only).
- Storage for sufficient amounts of wet feedstock to allow for interruption in the supply of feedstock from outside sources.
- Reclaim and transfer of feedstock to the BGCC dryers or ethanol plant pretreatment area.
- Drying of feedstock while controlling fines and dust.
- Sufficient dry fuel storage to allow for constant dry fuel feed to the gasifier.
- Transfer of dry fuel to gasifier fuel inlet weigh hoppers.
- Storage and transfer dolomite to the tar cracker.
- Removal of cooled ash and dust and storage for transfer off-site.

System Descriptions

Feedstock Preparation Systems

The BGCC plants receive wood biomass feedstock from two sources. The first source is the bark, rejects, sawdust, and associated material produced in the existing mill complex and is consolidated in the existing hog fuel processing area flow via a belt conveyor from the existing sizing station to the proposed wet fuel storage pile (See Figures 2-13, 2-16, 2-19, and 2-22). The existing bark sizing station must be relocated to allow proper alignment of conveyors. The second source, raw biomass, arrives from off-site via 20-ton trucks. All of the feedstock for the ethanol plant, however, is received from offsite in the form of chipped harvesting and thinning residuals that are brought in by truck.

During normal operation, trucks arrive at a scale facility, are weighed, and then proceed to one of two (one of three in the ethanol case) hydraulic truck dumpers with above grade, live bottom 5,600 cu feet receiving hoppers at the BGCC plant area. The two dumpers receive up to nine trucks per hour and tip the trucks, while still coupled to the cab, into the receiving hoppers. The BGCC plants receive trucks eight hours per day. At the ethanol plant three truck dumpers receive up to 16 trucks per hour. The ethanol plant receives trucks 10 hours per day. Empty trucks return to the scale facility for weighing out on separate and dedicated scales. A belt conveyor reclaims and transfers feedstock from the receiving hoppers to the process building (See Figures 2-13, 2-16, 2-19, and 2-22). In the process building, the material falls onto a reversing conveyor. A magnetic metal detection device, mounted in the conveyor, senses metal contamination in the feedstock and reverses the conveyor to dump rejects to the ground. Dumped material is periodically removed by a front end loader and discarded.

The process building contains a disk scalping screen. Material passing through the screen collects on a belt conveyor and transferred to the storage pile. The oversized reject material passing over the screen is directed to a hammer-type hog. Material processed through the hog falls onto the conveyor transferring material to the storage piles. In the ethanol plant case, an additional conveyor is provided to divert some of the flow to the BGCC plant or hog boiler. This belt conveyor discharges onto the lignin feed belt conveyor sending material back to the BGCC area (See Figures 2-22 and 2-23).

The sized biomass storage consists of a radial stacker and reclaimer system that combines the BGCC feedstock streams from the process building, existing sizing station and ethanol lignin and stores it on a pile. A bulldozer works the pile on a continuous basis to ensure complete mixing. The sized biomass storage pile servicing the ethanol plant contains only chipped harvesting and thinning residuals. The reclaimer system includes two redundant drag chain reclaimers which feed the sized biomass to the biomass dryer feed belt conveyor or biomass ethanol feed belt conveyor that delivers chips to the pretreatment area (Figure 2-23). The biomass dryer feed belt conveyor transfers the feedstock to a drag chain distribution conveyor. This conveyor distributes the feedstock to each of the four flue-gas dryer feed surge hoppers on a continuous basis. Each dryer inlet hopper is sized for approximately 10 minutes of full capacity operation. If all dryer inlet hoppers are full, the dryer feed belt conveyor will stop. From the hoppers, the feedstock is then fed into each dryer through an inlet rotary valve by dryer feed screw conveyors presented within Figures 2-16, 2-19, and 2-22. However, in the steam dryer case, biomass dryer feed belt conveyor delivers the biomass to a single steam dryer. Tampella selected a Niro steam dryer for this service. The dryer inlet hopper is sized for about 10 minutes of full-capacity operation. Wet fuel is fed to the dryer inlet rotary valve by the dryer feed screw conveyor. From the rotary valve biomass enters the dryer through a screw conveyor furnished with the dryer (See Figure 2-13).

The four biomass flue gas dryers are rotary drum type and use the flue gas from the discharge of the HRSG as the drying medium. The performance of the dryers is controlled by bleeding ambient air into the flue gas stream through a temperature-controlled damper on the inlet of the dryer. The biomass is dried to the required moisture content (20 weight percent) in a single pass. Coarse biomass exits the dryer through an outlet dropout box rotary valve into a dryer discharge screw conveyor. The flue gas, carrying fine material, is drawn through a system of four parallel cyclone dust collectors where particles are separated and discharged through rotary valves to the previously mentioned dryer discharge screw conveyor. Fine material then mixes with coarse biomass in the dryer discharge screw conveyor and falls onto the dry fuel silo belt conveyor. The flue gas exits the dryers through two stacks provided to serve the four dryer trains.

The steam dryer is a pressurized circulating fluidized bed type which uses super heated steam as a drying medium. The drying stream is actually evaporated moisture from the wet biomass which is recirculated to the dryer core and superheated by contact with heat exchanger tubes containing medium pressure superheated steam (203 psig, 428°F) provided from the HRSG. Wet biomass and steam are circulated by a 1,100 kW circulating fan. The wet biomass is fed into the first of 16 cells on the perimeter of the dryer. The particles pass thereafter through the cells clockwise around the perimeter driven by steam flow through a baffle configuration which creates a rotating movement. The larger particles stay in the lower part of the cells and pass from one cell to the next. The smaller particles are blown to the upper (conical) part of the cells. Here the steam passes between incline plates which distribute it in a larger cross section. With the reduction of steam velocity in upper regions, particles fall onto plates and slide downwards, through a set of perforated plates and rails. The dryer is designed to move particles around the perimeter as they become progressively dryer and lighter. Steam leaving the top of each cell carries dust which must be separated in the top of the dryer. The steam passes between stationary blades that create a cyclone effect in the top cylinder. The dust hits the cylinder walls and eventually passes through a slot in the cylinder wall into a smaller internal cyclone that drops it back down into the last cell for mixing with coarse dried material and discharge from the dryer.

Steam evaporated from the feed particles is added to the circulating flow of steam. Therefore, a corresponding amount of steam is discharged through a pipe in the top of the dryer. This contaminated steam is used in a proposed mill stripper. Dust free steam recirculates back through the core of the dryer. The saturated condensate from the heating steam exits through a flash tank. A small portion of the clean condensate flashes to steam and is routed to the dirty steam line. The remaining clean condensate is returned to the mill condensate system.

Dried fuel with fine and coarse particles uniformly mixed is discharged through a rotary valve onto the dry fuel silo feed belt conveyor. The dry fuel silo feed belt conveyor conveys the biomass from the dryer discharge to the two dry fuel silos. Live bottom screws control the discharge of biomass from each dry fuel silo onto the biomass feed belt conveyor. The major configuration difference between the TPS and Tampella biomass feedstock preparation systems is that the Tampella system interfaces with three gasifier feed systems, whereas the TPS feed preparation system interfaces with only two feed systems.

In the TPS gasifier, the material falls onto a reversing conveyor which distributes the feed to one of two dried fuel feed hoppers provided with the gasifier. In the Tampella gasifier, the biomass flow splits into three streams for delivery to the gasifier. A diverter gate directs flow either to a reversing shuttle conveyor or to a chute which goes directly to one of the biomass weigh hoppers furnished with the gasifier. The reversing shuttle conveyor transfers flow to either of two additional biomass feed transfer conveyors. These conveyors discharge into the remaining two biomass weigh hoppers furnished with the gasifier. The system is designed to alternate flow to the three inlets on a uniform basis. Each flow path is sized to handle the full biomass feed rate. This biomass delivery system is similar for both the Tampella steam dryer case and the flue gas dryer case, although flow rates are slightly different.

Dolomite Receiving

Dolomite is delivered to the BGCC site in self-unloading 20 ton trucks. A silo in the yard adjacent to the gasifier structure stores enough dolomite for four days of full-capacity operation. A pneumatic conveyor carries dolomite to the dolomite feed hopper furnished with the gasifiers (See Figures 2-14, 2-17, 2-20, and 2-24).

Ash Removal

In the TPS BGCC plant, ash exits the bottom of the fluid bed gasifier and is cooled in the ash cooling screw conveyor provided with the gasifier island. Ash from the bag filter also collects in a filter ash screw conveyor. A pneumatic conveyor carries bottom ash from rotary valves furnished with the gasifier to a storage silo in the yard. This silo is sized for two days of full-capacity operation. An integral discharge system can empty the ash in approximately two hours into a truck for transportation to Weyerhaeuser plantations for land application. A pneumatic conveyor carries filter ash from rotary valves furnished with the bag filter to a storage silo in the yard. Like the bottom ash silo, this silo is sized for two days of full-capacity operation. An integral discharge system can empty the ash in approximately two hours into a truck for transportation to Weyerhaeuser plantations for land application for treatment as described above. A fluidization system is provided with the filter ash storage silo to prevent bridging of the lighter, less dense fly ash to allow for smooth discharge of material into ash receiving trucks.

In the Tampella BGCC plant, each of two pneumatic conveyors carries bottom ash from lock hoppers furnished with the gasifier to storage silo in the yard. Ash temperature is about 450°F. This silo is sized for two days of full-capacity operation and is emptied by an integral discharge system in approximately two hours into a truck for transportation to Weyerhaeuser plantations for land application for treatment as described above. A pneumatic conveyor carries filter ash from rotary valves furnished with the gasifier to a storage silo in the yard. This silo also is sized for two days of full-capacity operation and is emptied into a truck for disposal by an integral discharge system in approximately two hours. As in the TPS system, a fluidization system is provided with the filter ash storage silo to prevent bridging and allow for smooth discharge of material into ash receiving trucks.

Stillage Handling

Lignin storage waste from the ethanol plant mixed with processed wood chips that have bypassed the ethanol plant are conveyed to the BGCC feed system. Lignin stillage is deposited on the lignin waste transfer conveyor by the ethanol plant stillage cake belt conveyor (See Figure 2-23). At an intermediate point on the waste transfer conveyor, bypassed wood chips are added to the flow by the bypass conveyor. The combined flow of lignin cake and chips is discharged on the wet fuel storage pile (See Figure 2-22). At this location, it is well mixed with the mill waste bark by a bulldozer. From here, the material is handled by the BGCC feed preparation and handling system as previously described.

Bed Sand Receiving

Bed sand is added to the TPS gasifier only during startup before sufficient ash has built up in the system to sustain the fluidized bed. The gasifier island includes a bed sand inlet weigh hopper. Bags of bed sand are loaded on pallets and transported to the gasifier area for manual loading into the inlet weigh hopper.

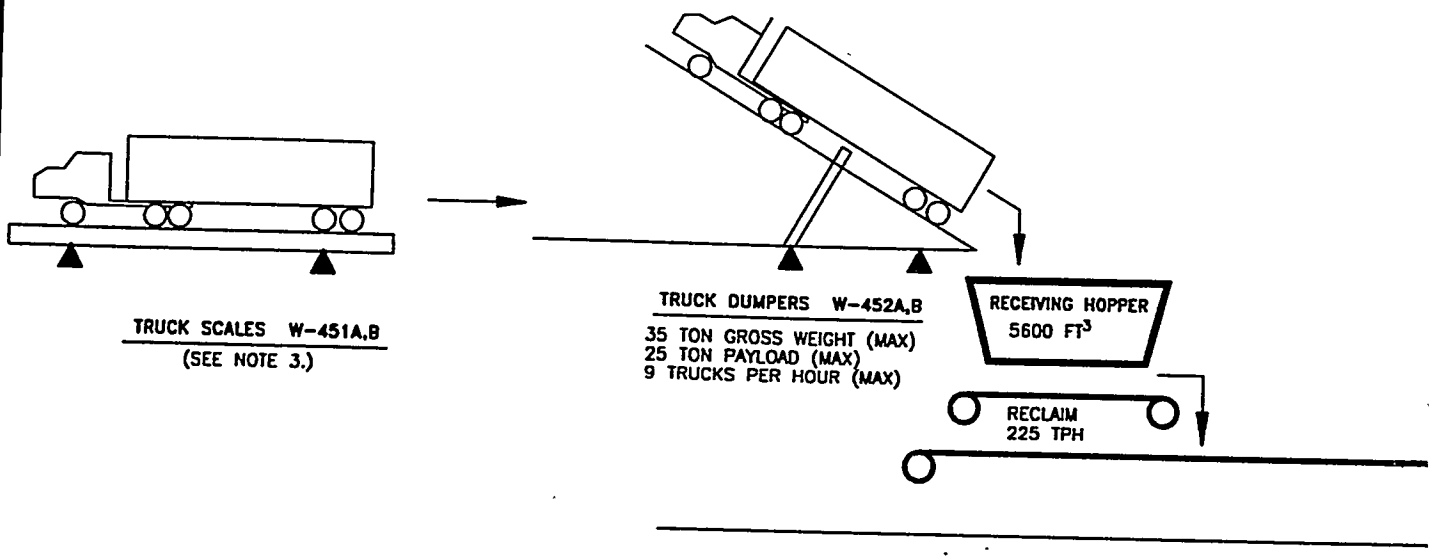

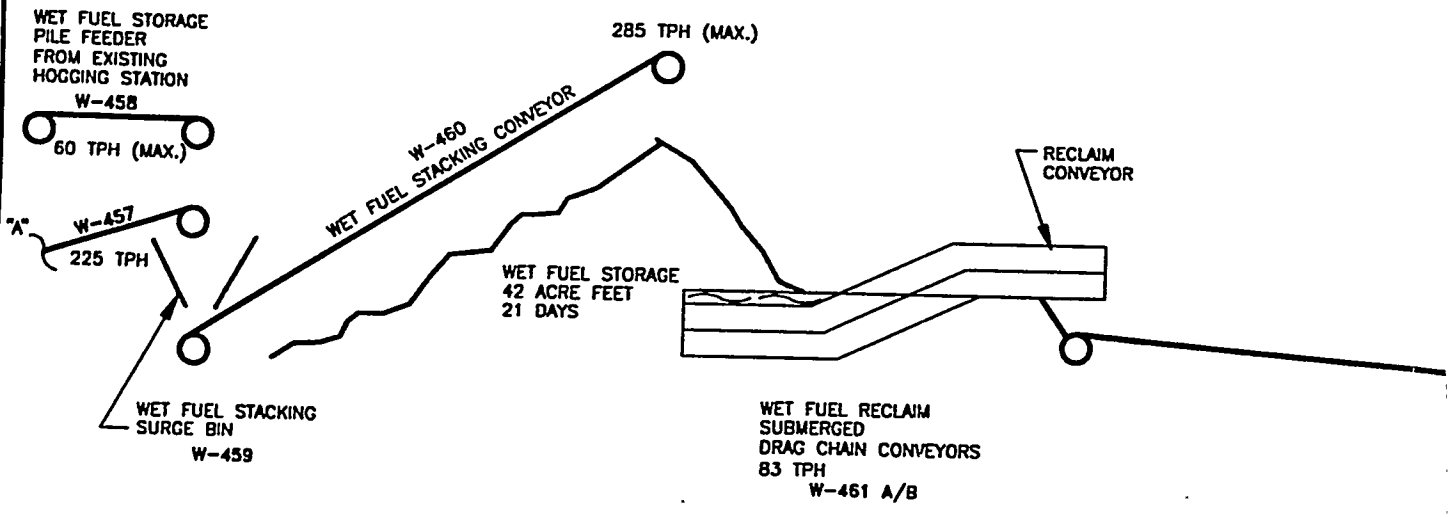

PLOT 3/8

WEYJ9012

ISSUE	DESCRIPTION	CHKD	CORRECT	ISSUE	DESCRIPTION	CHKD	CORRECT	ISSUE	DESCRIPTION
PC ARCH CIVIL CONC STL L&P INST MB	P.E. S.A. FAC ELEC LTG MATL			PC ARCH CIVIL CONC STL L&P INST MB	P.E. S.A. FAC ELEC LTG MATL			2	REVISED EQUIP N DELETED WET FUE STORAGE SILOS ADDED REVERSING

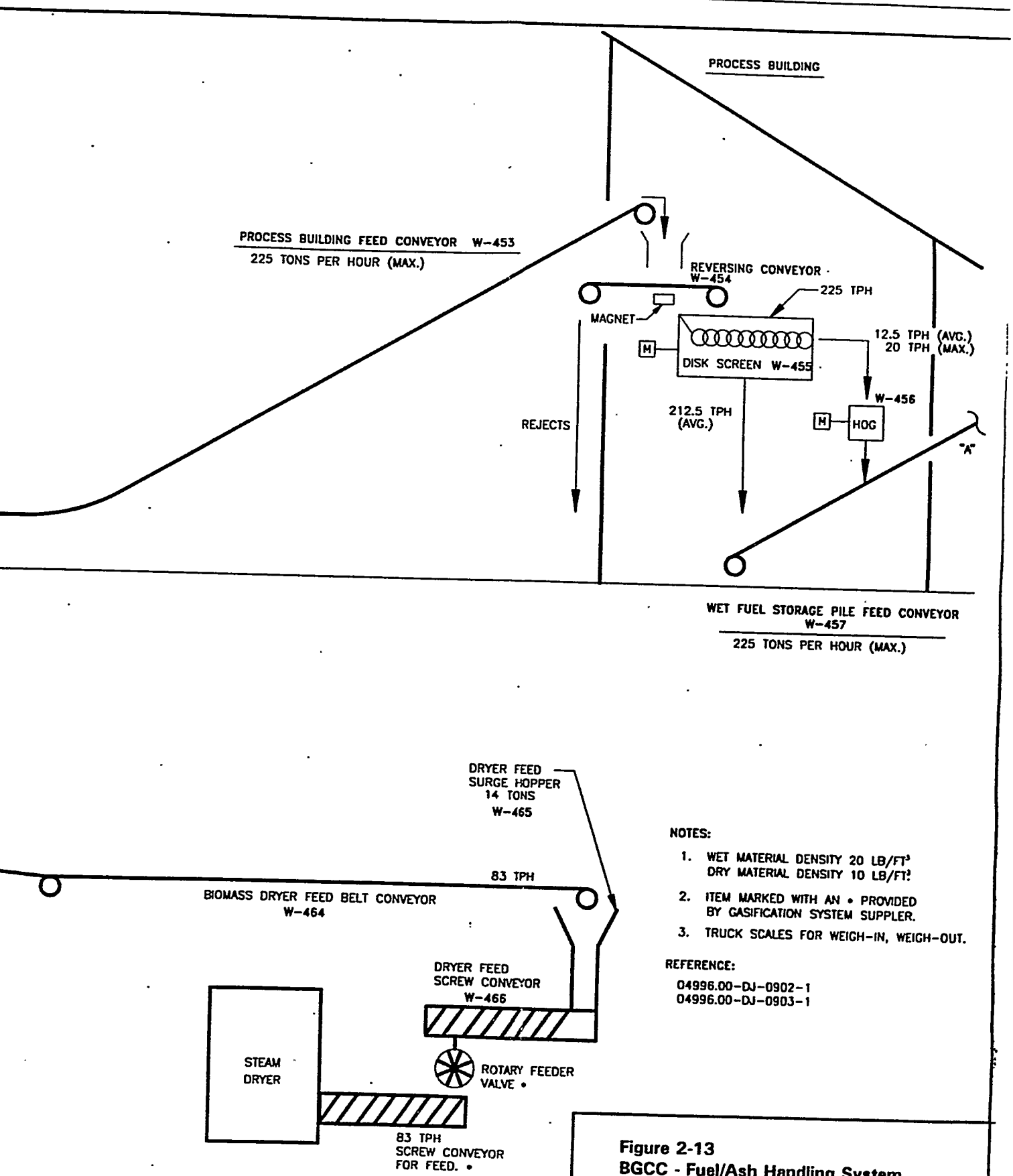

NOTES:

1. WET MATERIAL DENSITY 20 LB/FT³
   DRY MATERIAL DENSITY 10 LB/FT³
2. ITEM MARKED WITH AN • PROVIDED BY GASIFICATION SYSTEM SUPPLIER.
3. TRUCK SCALES FOR WEIGH-IN, WEIGH-OUT.

REFERENCE:

04996.00-DJ-0902-1
04996.00-DJ-0903-1

Figure 2-13
BGCC - Fuel/Ash Handling System
Tampella Steam Dryer Case
Sheet 1 of 3

ISSUE	DESCRIPTION
1	ORIGINAL ISSUE

DRAWING NUMBER 04996.00-DJ-0901-2

DESIGNED BY: P.WELLS DRAWN BY: J.JOHNSON

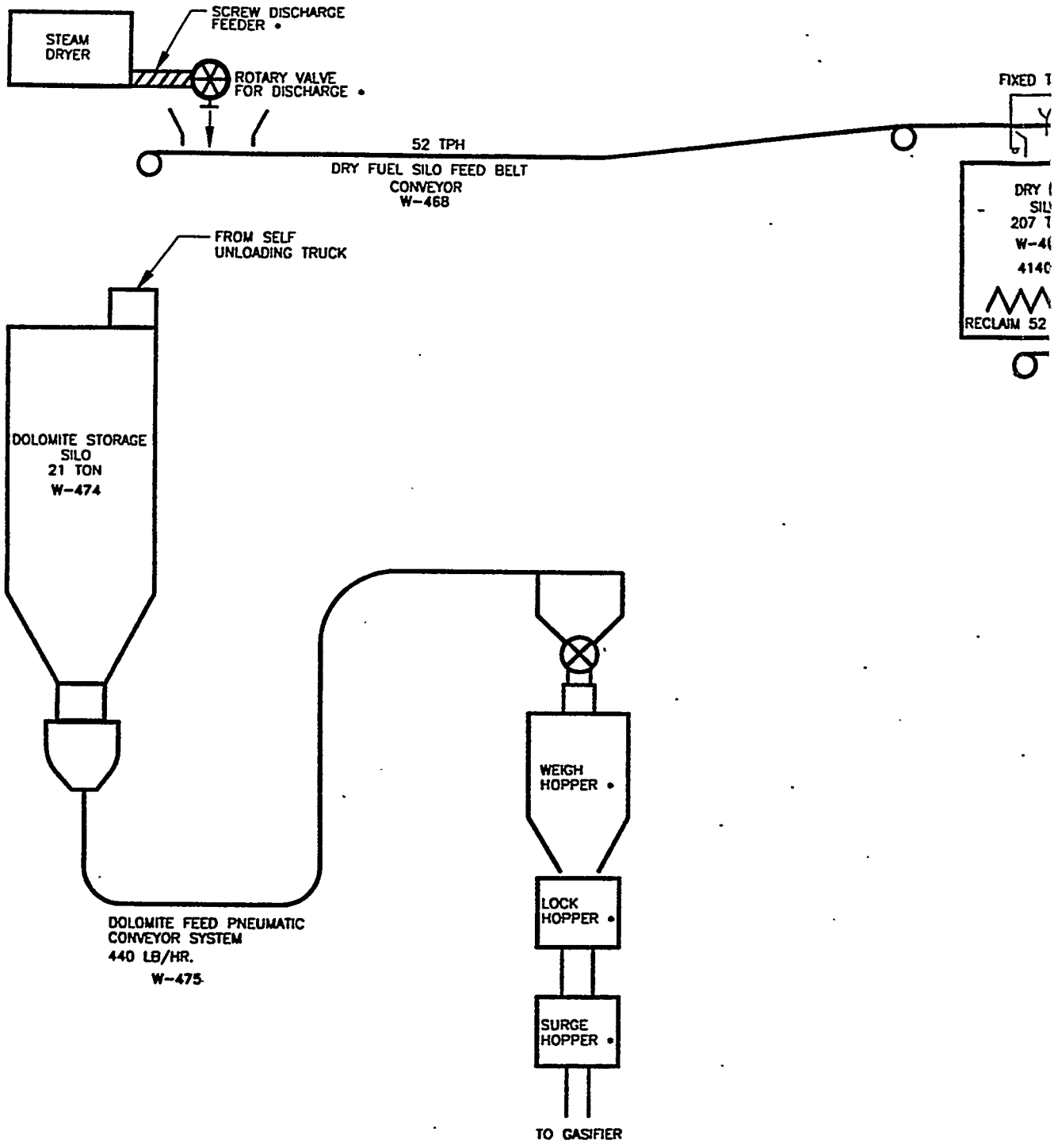

ISSUE	DESCRIPTION	CHKD	CORRECT	ISSUE	DESCRIPTION	CHKD	CORRECT	ISSUE	DESCRIPT
								2	REVISED EQUIP ADDED EQUIP N ADDED FIXED TI

PC | ARCH | CIVIL | CONC | STL | L&P | INST | MD | P.E. | S.A. | FAC | ELEC | LTG | MATL

PLOT 1/18

WEYJ9022

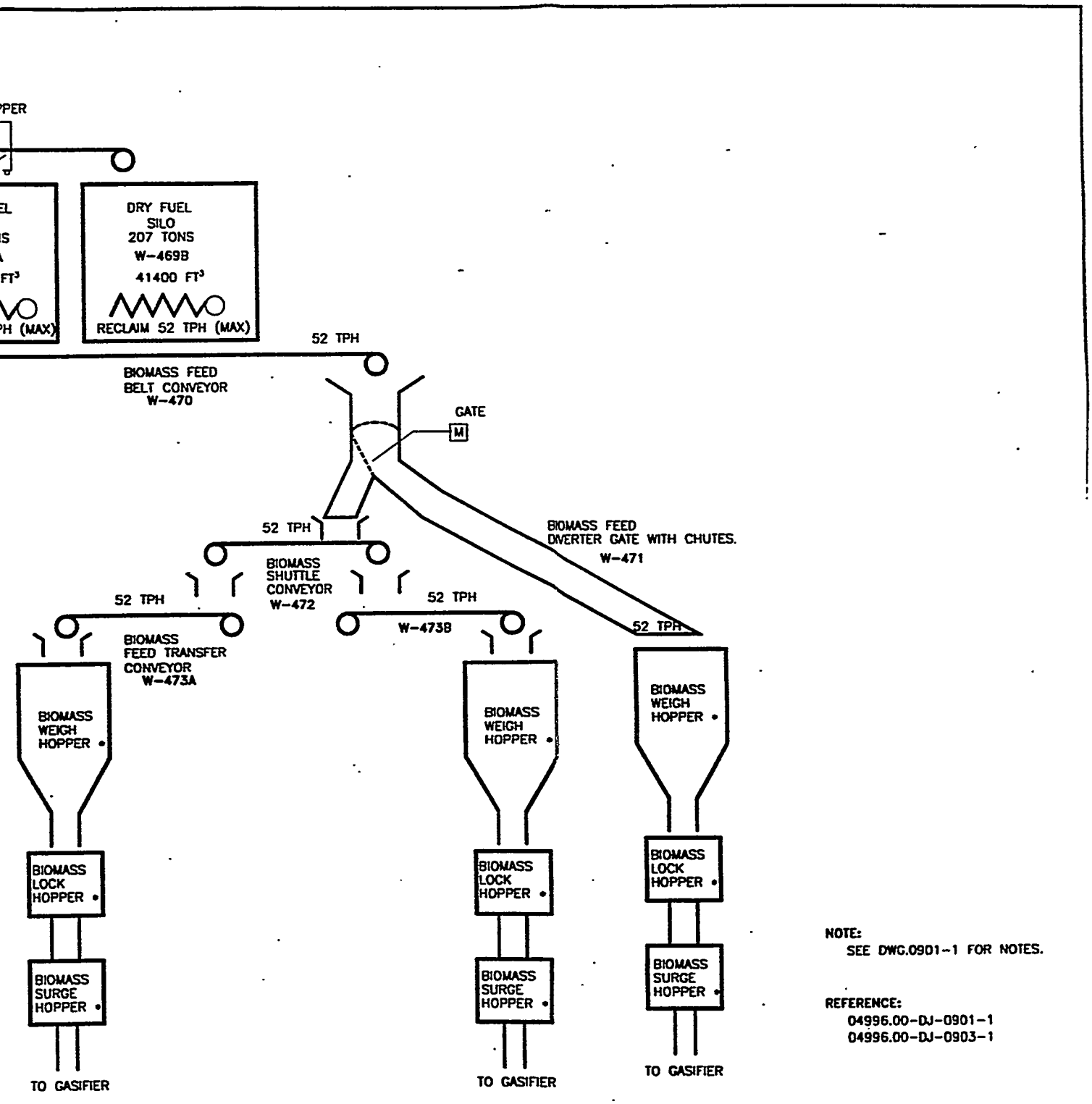

NOTE:
SEE DWG.0901-1 FOR NOTES.

REFERENCE:
04996.00-DJ-0901-1
04996.00-DJ-0903-1

Figure 2-14
BGCC - Fuel/Ash Handling System
Tampella Steam Dryer Case
Sheet 2 of 3

NUMBERS W-475 PPER						1	ORIGINAL ISSUE											TGV 2/5/94
	CHKD			CORRECT			ISSUE	DESCRIPTION							CHKD			CORRECT				
L&P	DIST	MD	P.S.	S.A.	FAC	ELEC	LTG	MATL	PC	ARCH	CIVIL	CONC	STL	L&P	DIST	MD	P.S.	S.A.	FAC	ELEC	LTG	MATL

DRAWING NUMBER 04996.00-DJ-0902-2

DESIGNED BY: P.WELLS | DRAWN BY: J.JOHNSON | DSGN CHK'D BY: | CHK'D BY: | AREAS | LEVELS | WORK PK

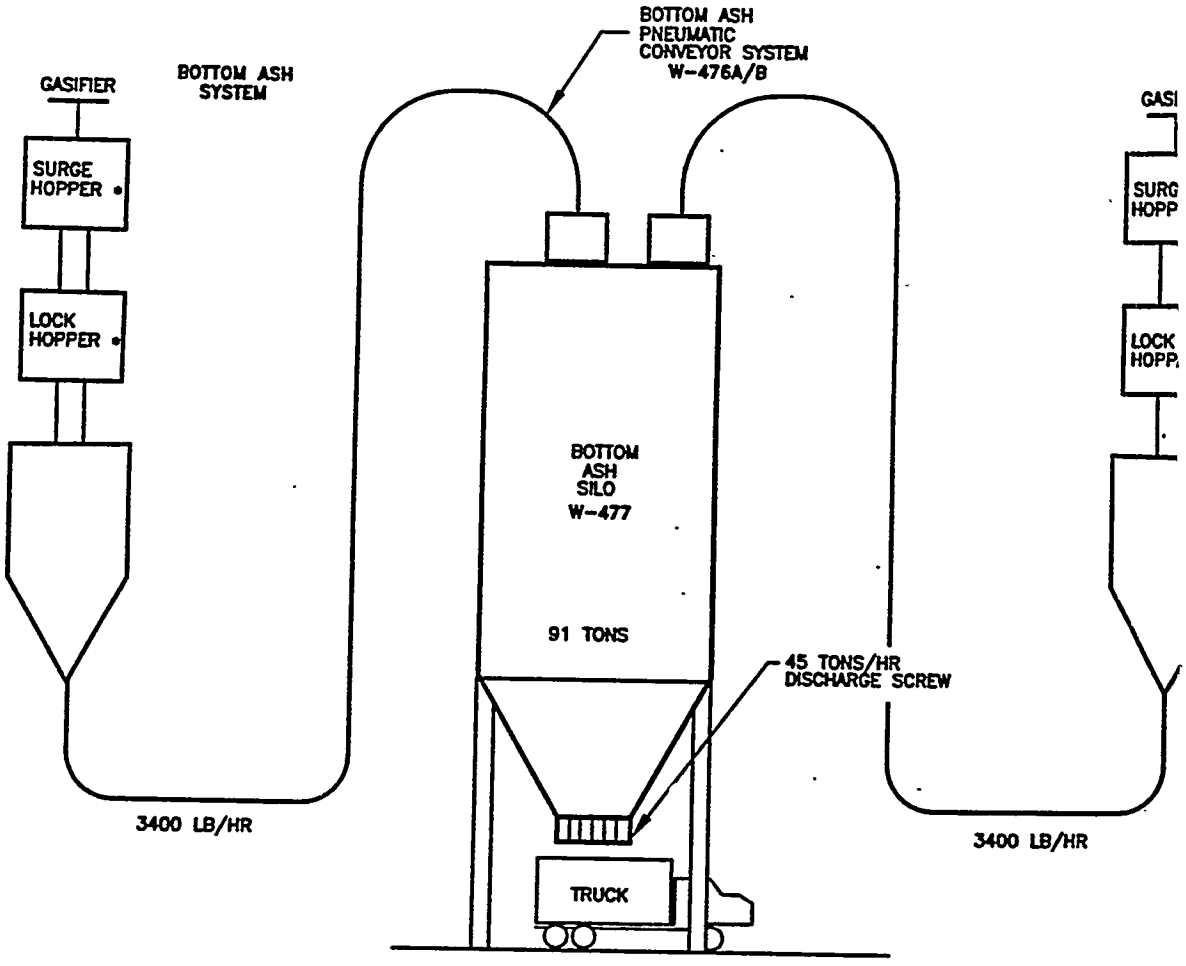

PLOT 12/15

VEYJ9032

ISSUE	DESCRIPTION	CHKD	CORRECT	ISSUE	DESCRIPTION	CHKD	CORRECT		ISSUE	DESCRIPTION
PC ARCH CIVIL CONC STL LAP PIPE MB	P.S. S.A. FAC ELEC LTR MATL			PC ARCH CIVIL CONC STL LAP PIPE MB	P.S. S.A. FAC ELEC LTR MATL			2	PC ARCH CIVIL CONC STL LAP	

REVISED EQUIP NUMBI

NOTE:
SEE DWG.0901-1 FOR NOTES.

REFERENCE:
04996.00-DJ-0901-1
04996.00-DJ-0902-1

Figure 2-15
BGCC - Fuel/Ash Handling System
Tampella Steam Dryer Case
Sheet 3 of 3

1 ORIGINAL ISSUE

DRAWING NUMBER 04996.00-DJ-0903-2

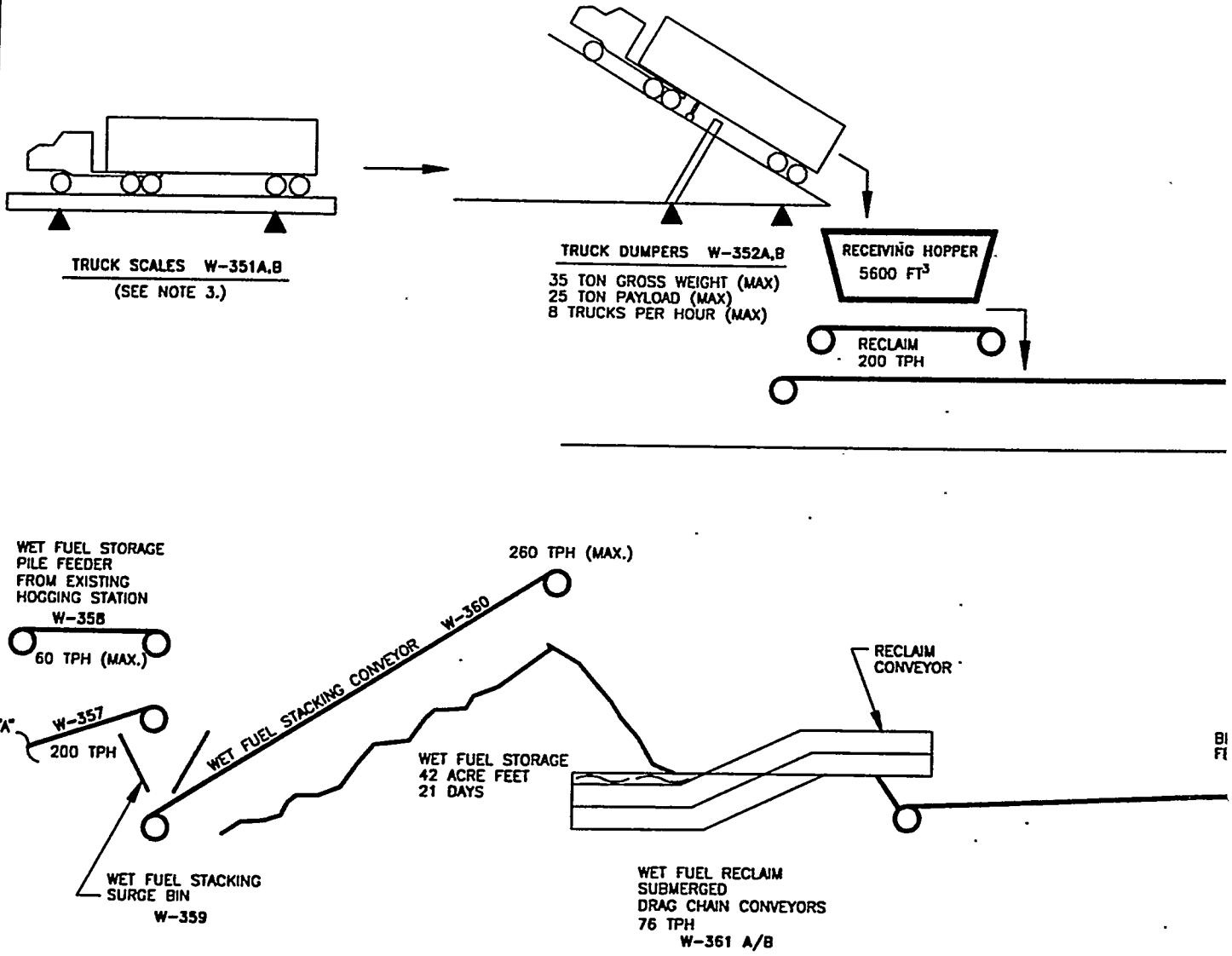

PLOT 3/8

WEYJ9042

ISSUE	DESCRIPTION								CHKD	CORRECT						ISSUE	DESCRIPTION								CHKD	CORRECT						ISSUE	DESCRIPTION
PC	ARCH	CIVIL	CONC	STL	L&P	INST	MB		P.S.	S.A.	FAC	ELEC	LTG	MATL		PC	ARCH	CIVIL	CONC	STL	L&P	INST	MB		P.S.	S.A.	FAC	ELEC	LTG	MATL		PC	ARCH	CIVIL	CONC	STL
																																2	REVISED EQUIP & DELETED WET FUE STORAGE SILOS ADDED REVERSING

NOTES:

1. WET MATERIAL DENSITY 20 LB/FT
   DRY MATERIAL DENSITY 10 LB/FT.
2. ITEM MARKED WITH AN * PROVIDED BY GASIFICATION SYSTEM SUPPLIER.
3. TRUCK SCALES FOR WEIGH-IN, WEIGH-OUT.

REFERENCE:

04996.00-DJ-0905-1
04996.00-DJ-0906-1

Figure 2-16
BGCC - Fuel/Ash Handling System
Tampella Flue Dryer Case
Sheet 1 of 3

UMBERS
ONV.

ISSUE	DESCRIPTION	CHKD		CORRECT
1	ORIGINAL ISSUE		PDW	TGV 2/5/94

CHKD CORRECT ISSUE DESCRIPTION
INST ME P.S. S.A. FAC ELEC LTG MATL PC ARCH CIVIL CONC STL L&P INST ME P.S. S.A. FAC ELEC LTG MATL

DRAWING NUMBER 04996.00-DJ-0904-2

DESIGNED BY: P.WELLS
DRAWN BY: J.JOHNSON
DSGN CHK'D BY:
CHK'D BY:
AREAS LEVELS WORK PKG

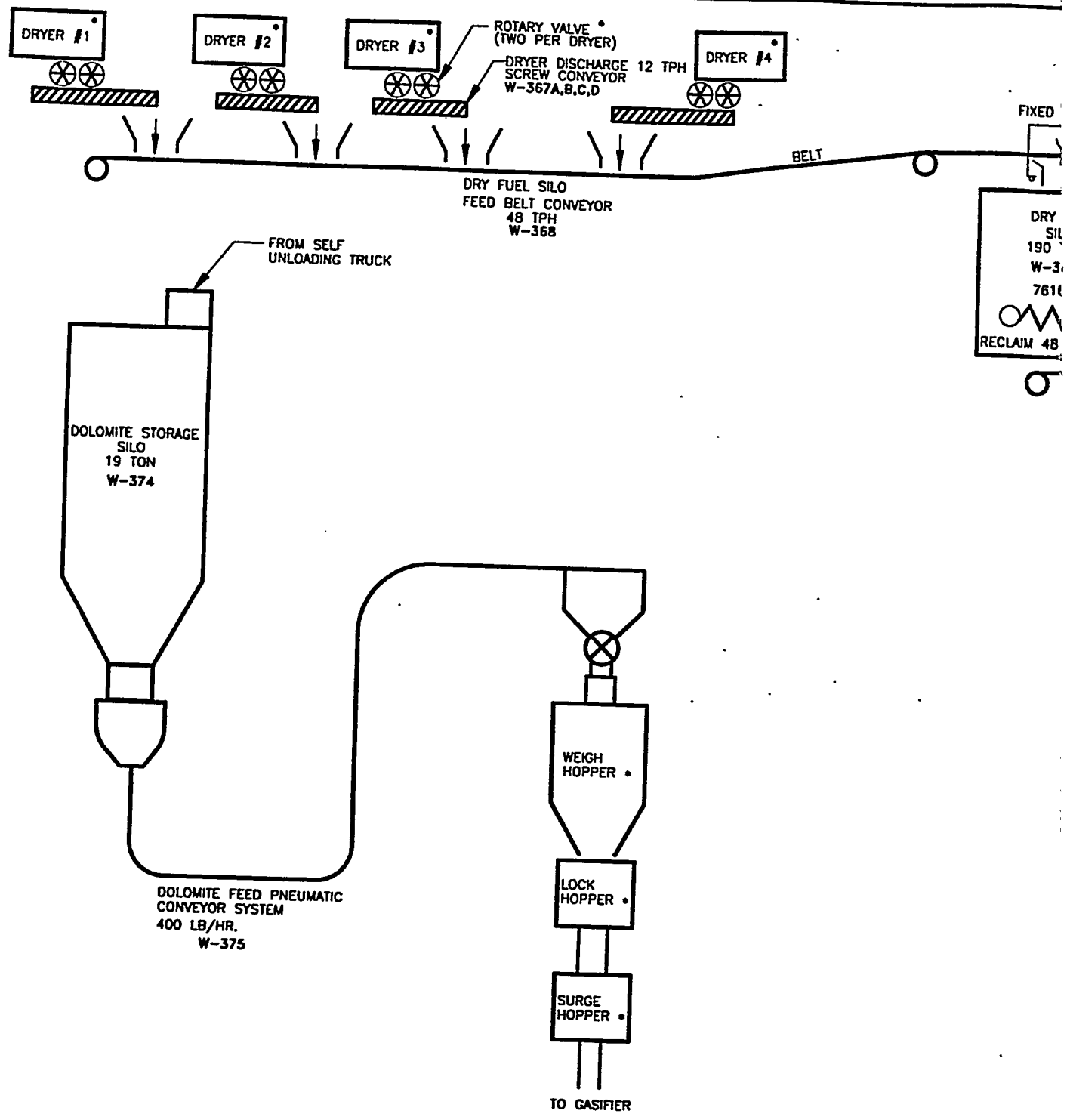

PLOT 1/18

WEYJ9052

ISSUE	DESCRIPTION	CHKD	CORRECT	ISSUE	DESCRIPTION	CHKD	CORRECT	ISSUE	DESCRIPTION
PC ARCH CIVIL CONC STL L&P INST MD	P.S. S.A. FAC ELEC LTG MATL	PC ARCH CIVIL CONC STL L&P INST MD	P.S. S.A. FAC ELEC LTG MATL	PC ARCH CIVIL CONC STL L&P	
								2	REVISED EQUIP NUM ADDED FIXED TRIPPI

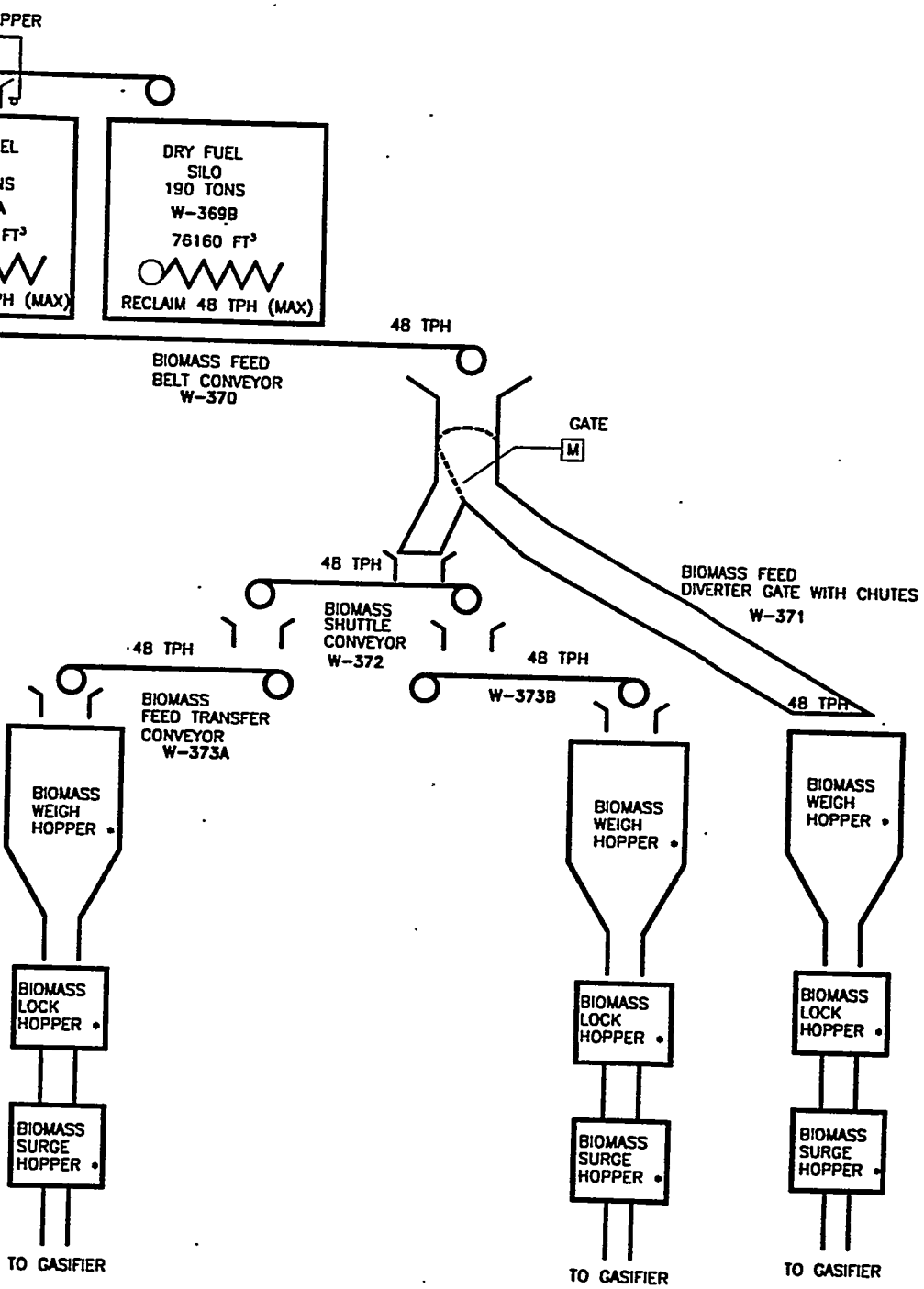

NOTE:
SEE DWG.0904-1 FOR NOTES.

REFERENCE:
04996.00-DJ-0904-1
04996.00-DJ-0906-1

Figure 2-17
BGCC - Fuel/Ash Handling System
Tampella Flue Dryer Case
Sheet 2 of 3

DRAWING NUMBER 04996.00-DJ-0905-2

ISSUE	DESCRIPTION	CHK'D	CORRECT	APP'D	DATE
1	ORIGINAL ISSUE	PDW	TGV		12/5/94

DESIGNED BY: P.WELLS DRAWN BY: J.JOHNSON AREAS LEVELS WORK PKG
DESGN CHK'D BY: CHK'D BY:

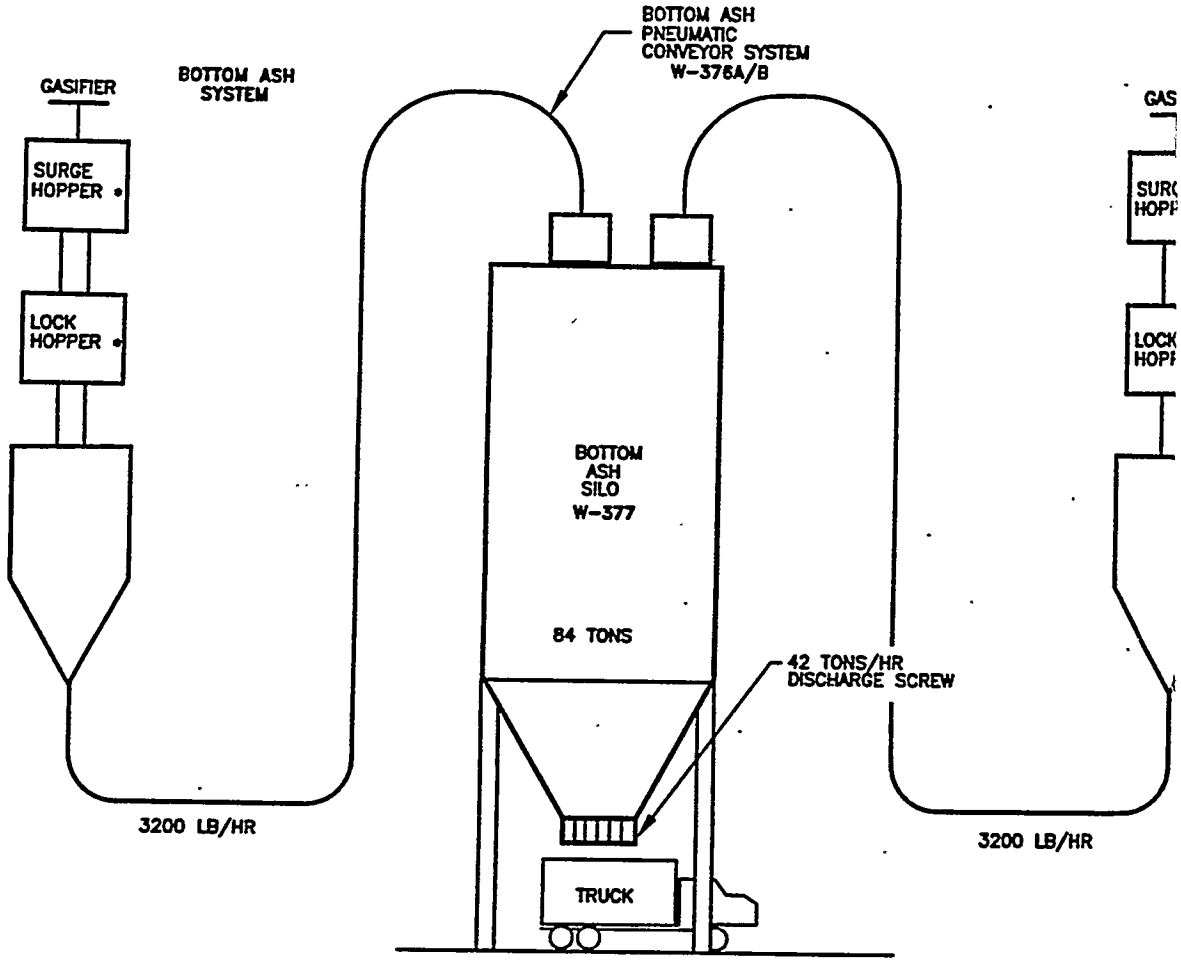

PLOT 12/15

WEYJ9062

ISSUE	DESCRIPTION	CHKD	CORRECT	ISSUE	DESCRIPTION	CHKD	CORRECT		REVISED EQUIP NUM
								2	

NOTE:
SEE DWG.0904-1 FOR NOTES.

REFERENCE:
04996.00-DJ-0904-1
04996.00-DJ-0905-1

Figure 2-18
BGCC - Fuel/Ash Handling System
Tampella Flue Dryer Case
Sheet 3 of 3

1 ORIGINAL ISSUE

DRAWING NUMBER 04996.00-DJ-0906-2

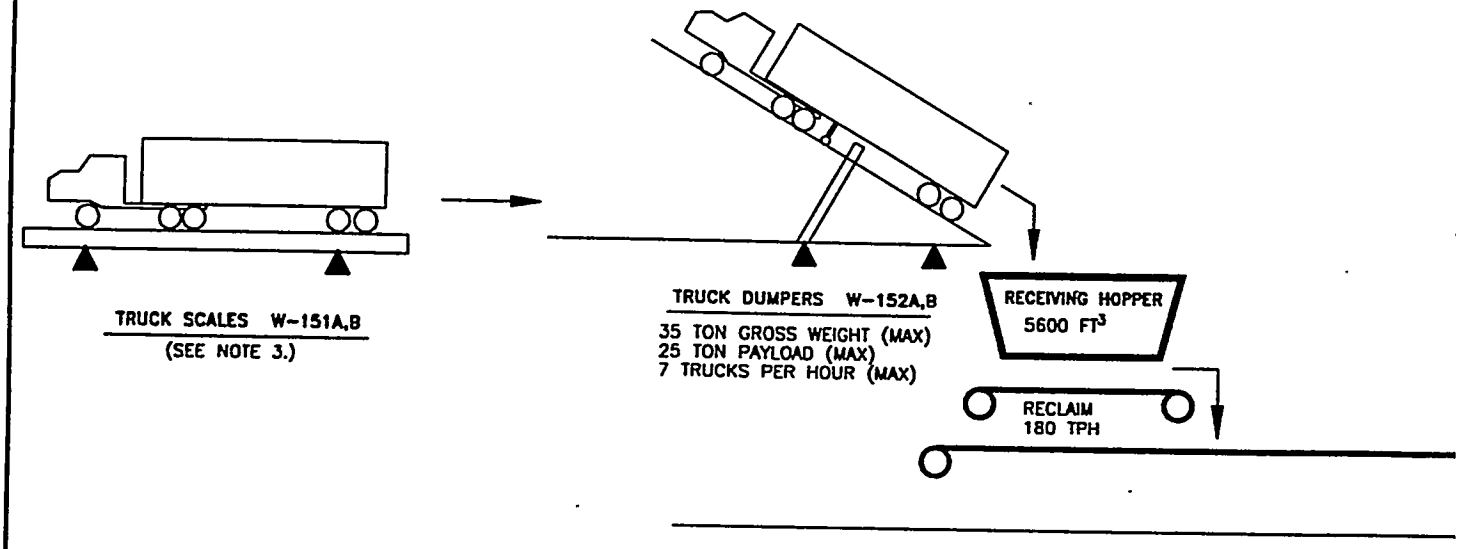

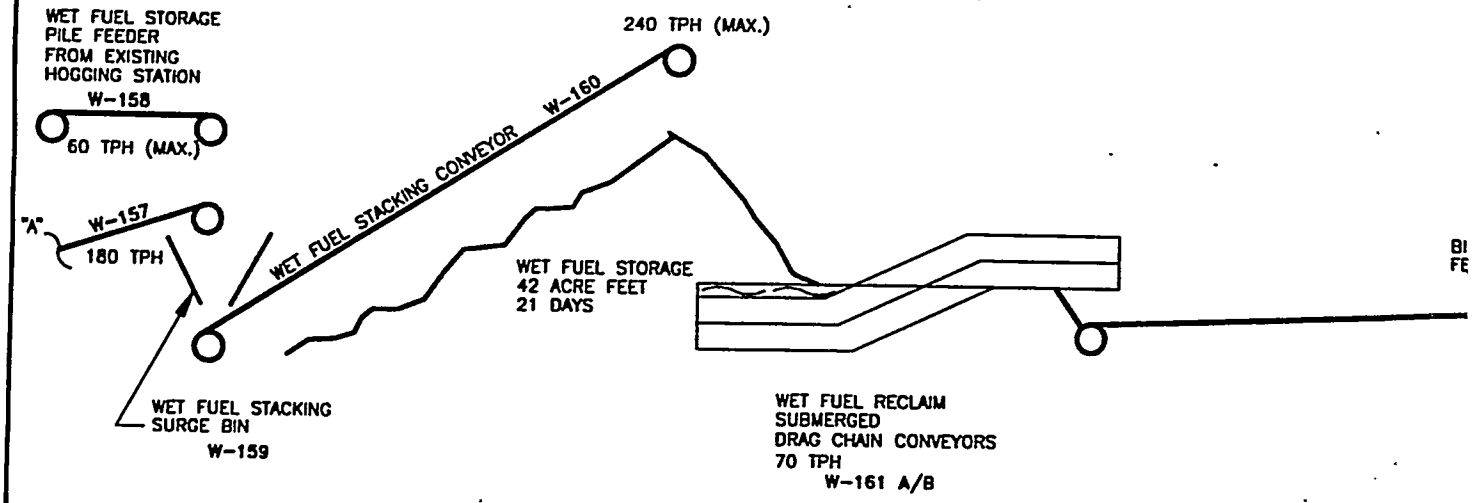

PLOT 3/8

WEYJ9072

ISSUE	DESCRIPTION	CHKD	CORRECT	ISSUE	DESCRIPTION	CHKD	CORRECT	ISSUE	DESCRIPTION
PC ARCH CIVIL CONC STL L&P INST MD	P.E. S.A. FAC ELEC LTG MATL			PC ARCH CIVIL CONC STL L&P INST MD	P.E. S.A. FAC ELEC LTG MATL			2 PC	REVISED EQUIP & DELETED WET FUE STORAGE SILOS ADDED REVERSING

NOTES:

1. WET MATERIAL DENSITY 20 LB/FT
   DRY MATERIAL DENSITY 10 LB/FT.
2. ITEM MARKED WITH AN • PROVIDED BY GASIFICATION SYSTEM SUPPLER.
3. TRUCK SCALES FOR WEIGH-IN, WEIGH-OUT.

REFERENCE:

04996.00-DJ-0908-1
04996.00-DJ-0909-1

Figure 2-19
BGCC - Fuel/Ash Handling System
TPS Options
Sheet 1 of 3

UMBERS	1	ORIGINAL ISSUE	PDW TGV 12/5/94
CONV.	ISSUE	DESCRIPTION	

DRAWING NUMBER 04996.00-DJ-0907-2

DESIGNED BY: P.WELLS | DRAWN BY: J.JOHNSON | AREAS | LEVELS | WORK PKG
DSGN CHK'D BY: | CHK'D BY:

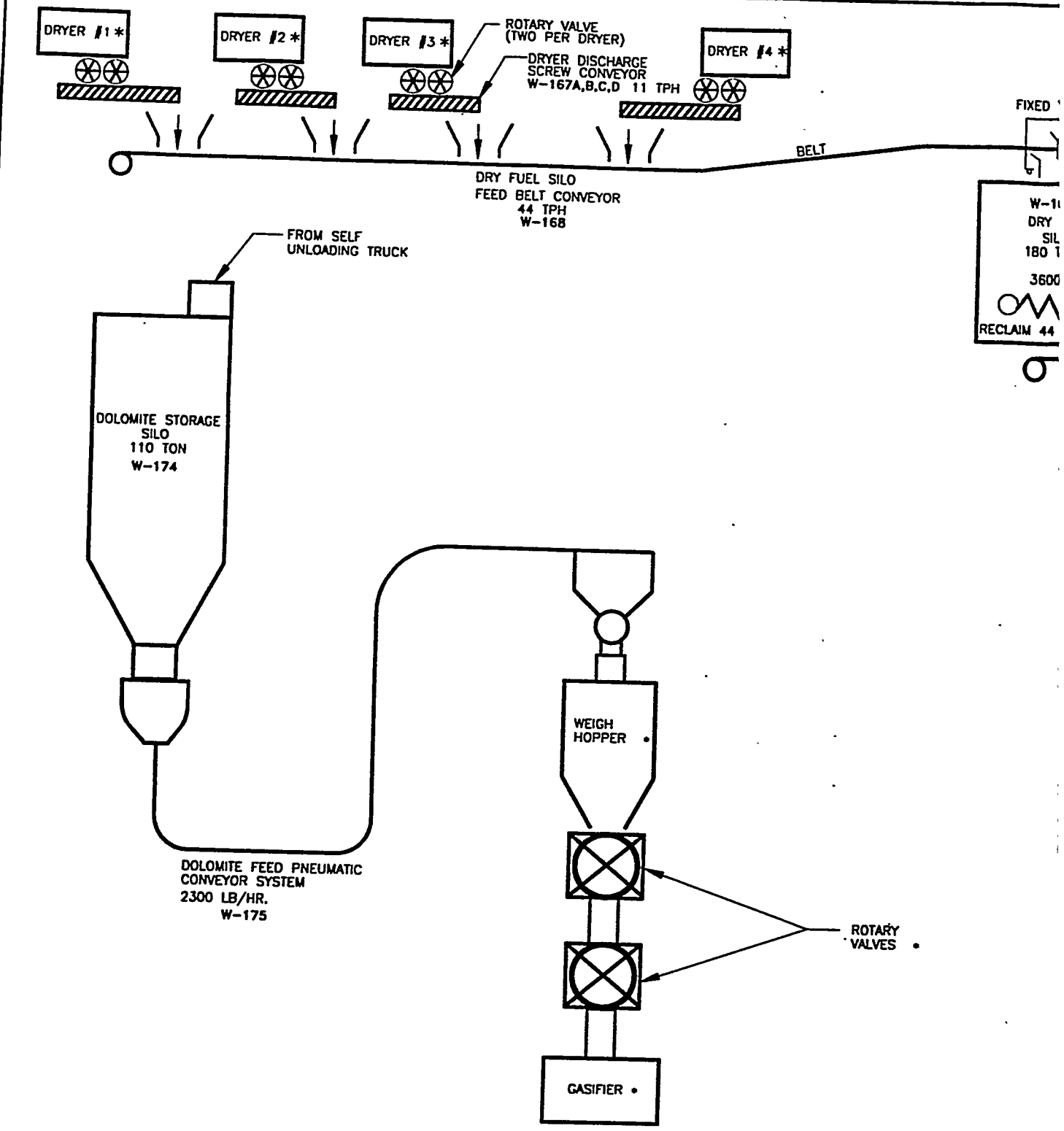

PLOT 1/18

WEYJ9082

ISSUE	DESCRIPTION	CHKD	CORRECT
2	REVISED EQUIP NUM ADDED FIXED TRIPPI BIOMASS WEIGH HOF BIOMASS REVERSING		

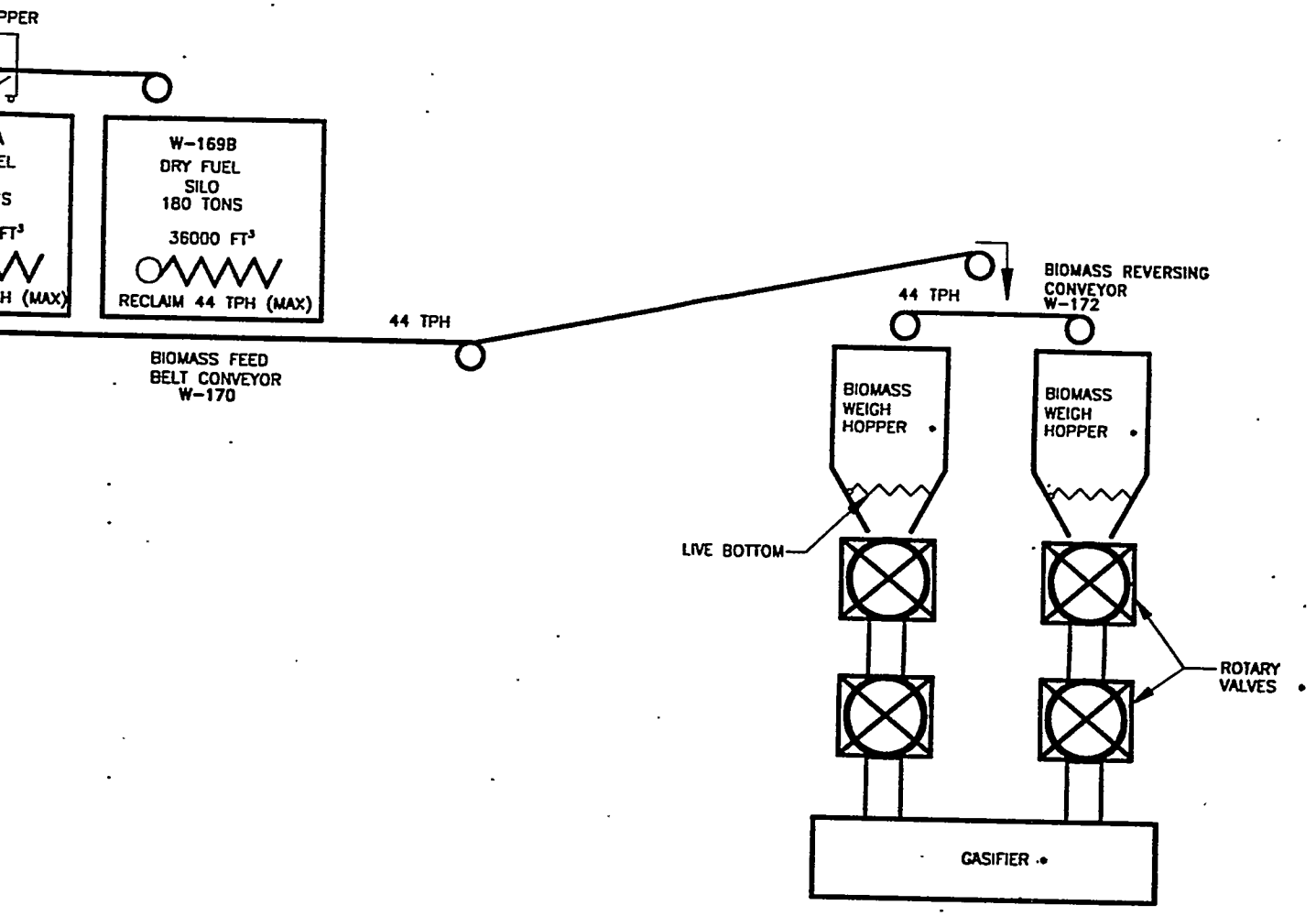

NOTE:
SEE DWG.0907-1 FOR NOTES.

REFERENCE:
04996.00-DJ-0907-1
04996.00-DJ-0909-1

Figure 2-20
BGCC - Fuel/Ash Handling System
TPS Options
Sheet 2 of 3

DRAWING NUMBER 04996.00-DJ-0908-2

ISSUE	DESCRIPTION	CHKD	CORRECT
1	ORIGINAL ISSUE	POW	TGV 12/5/94

DESIGNED BY: P.WELLS
DRAWN BY: J.JOHNSON
DSGN CHK'D BY:
CHK'D BY:
AREAS
LEVELS
WORK PKG

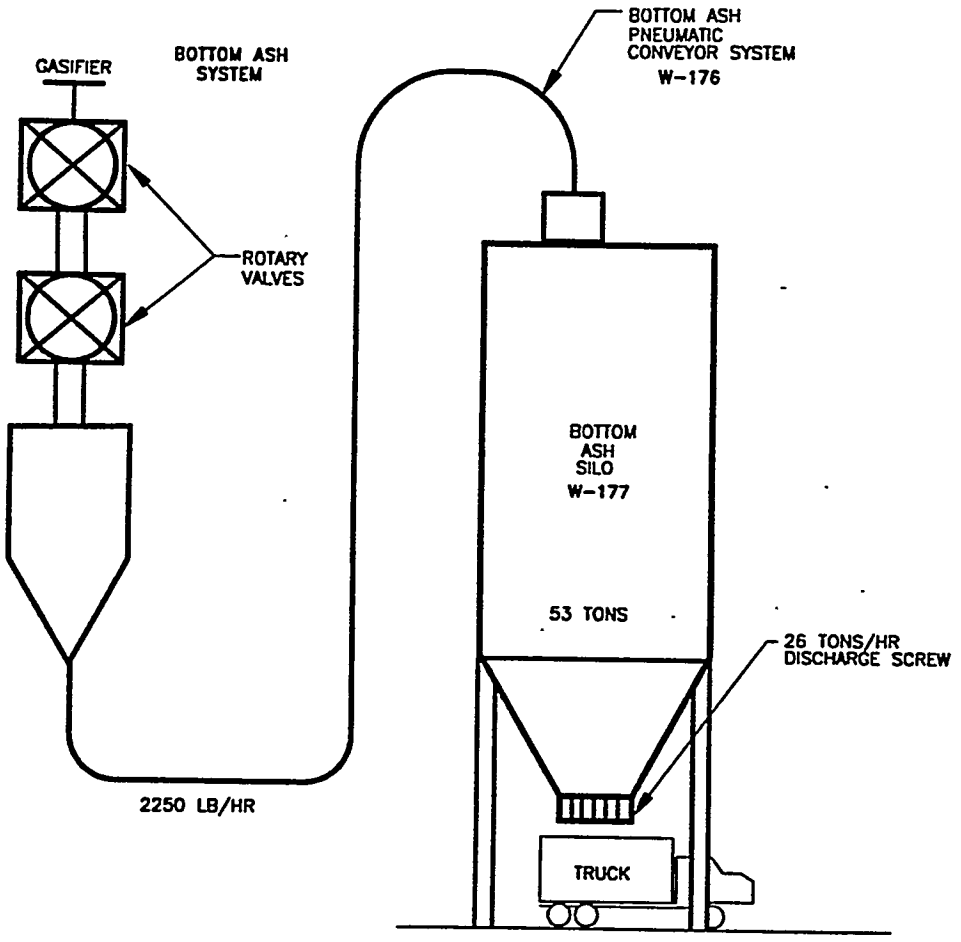

PLOT 1"=1'-0"

WEYJ9092

ISSUE	DESCRIPTION	CHKD	CORRECT	ISSUE	DESCRIPTION	CHKD	CORRECT	ISSUE	DESCRIPTION
PC ARCH CIVIL CONC STL L&P INST MB	P.S. S.A. FAC ELEC LTG MATL			PC ARCH CIVIL CONC STL L&P INST MB	P.S. S.A. FAC ELEC LTG MATL			PC ARCH CIVIL CONC STL	
								2	REVISED EQUIP NU

NOTE:
SEE DWG.0907-1 FOR NOTES.

REFERENCE:
04996.00-DJ-0907-1
04996.00-DJ-0908-1

Figure 2-21
BGCC - Fuel/Ash Handling System
TPS Options
Sheet 3 of 3

ISSUE	DESCRIPTION	CHKD	CORRECT	APPR	DATE
1	ORIGINAL ISSUE			PDW	TGV 12/5/94

DRAWING NUMBER 04996.00-DJ-0909-2

DESIGNED BY: P.WELLS
DRAWN BY: J.JOHNSON
DSGN CHK'D BY:
CHK'D BY:

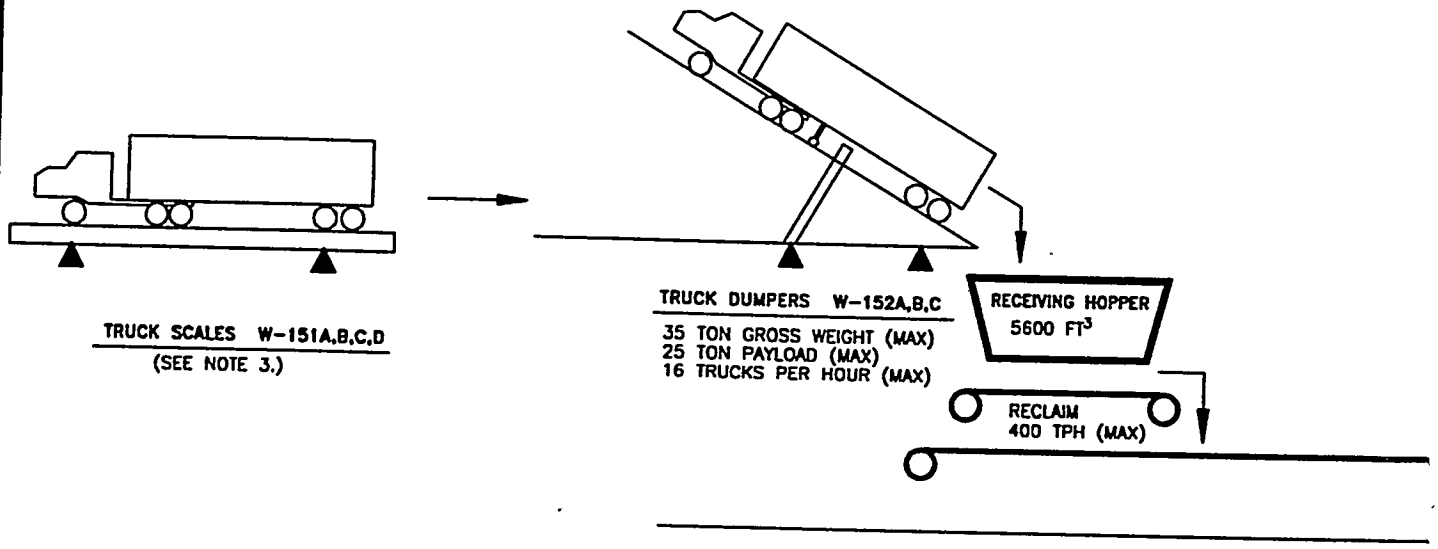

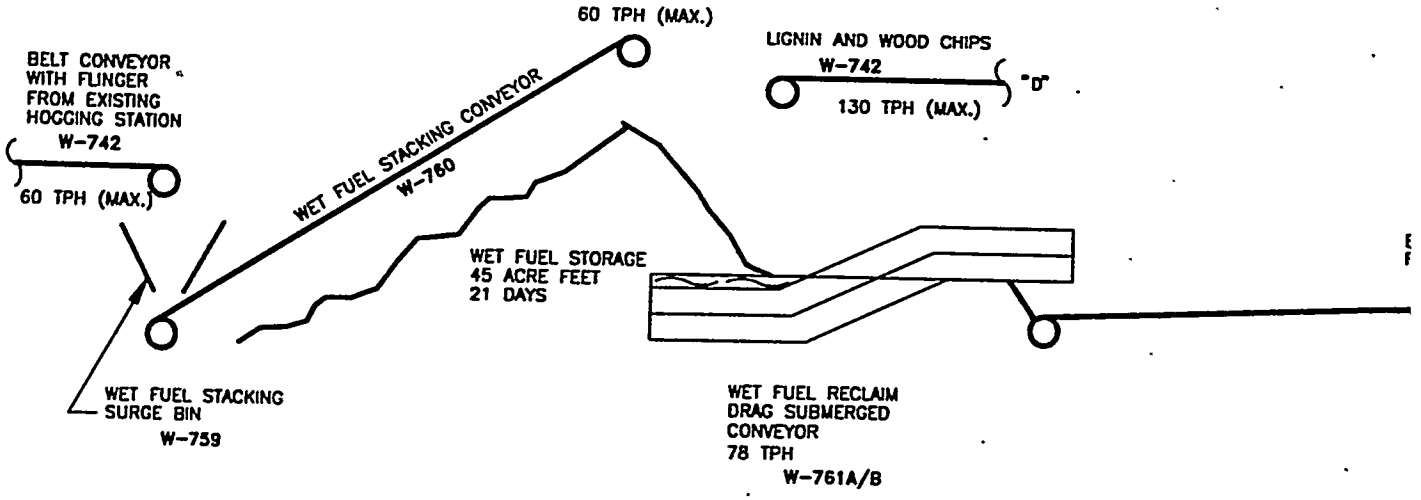

PLOT 3/8

WEYJ9102

ISSUE	DESCRIPTION	CHKD	CORRECT	APPR	MFG	ISSUE	DESCRIPTION	CHKD	CORRECT	APPR	MFG	ISSUE	DESCRIPTION
PC ARCH CIVIL CONC STL L&P INST MD	P.S. S.A. FAC ELEC LTG MATL					PC ARCH CIVIL CONC STL L&P INST MD	P.S. S.A. FAC ELEC LTG MATL					PC ARCH CIVIL CONC STL	
												2	REV'D EQUIP NO. ADDED DRYERS & & RMVD WET FUE SILO'S

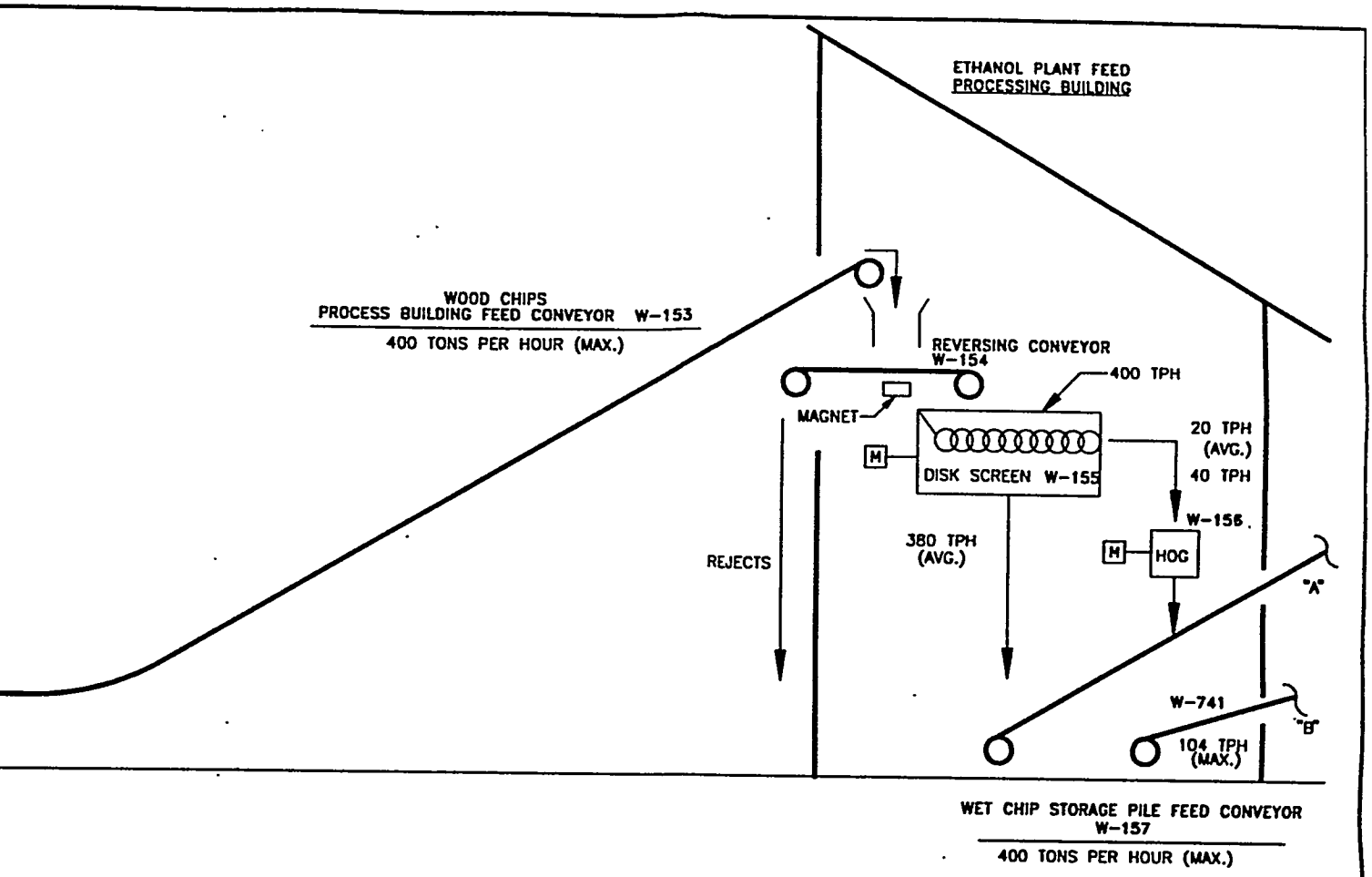

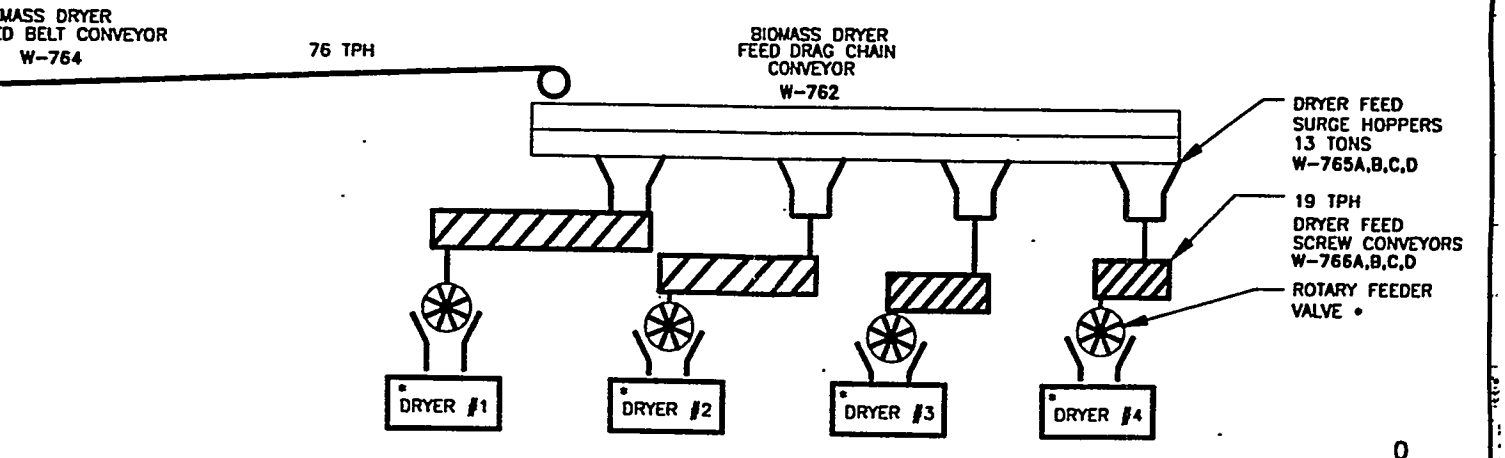

0

NOTES:

1. WET MATERIAL DENSITY 20 LB/FT
   DRY MATERIAL DENSITY 10 LB/FT.
2. ITEM MARKED WITH AN • PROVIDED BY GASIFICATION SYSTEM SUPPLER.
3. TRUCK SCALES FOR WEIGH-IN, WEIGH-OUT.

REFERENCE:

04996.00-DJ-0911-1
04996.00-DJ-0912-1
04996.00-DJ-0913-1

Figure 2-22
BGCC Ethanol Retrofit -
Fuel/Ash Handling System
Tampella Flue Gas Dryer Case

DRAWING NUMBER 04996.00-DJ-0910-2

& QTYS CNVYRS STR					1	ORIGINAL ISSUE				PDW	TGV 12/5/94
CHK'D	CORRECT			APPR'D	ISSUE	DESCRIPTION	CHK'D	CORRECT		APPR'D	

P	DIST	NB	P.S.	S.A.	FAC	ELEC	LTG	MATL	PC	ARCH	CIVIL	CONC	STL	L&P	DIST	NB	P.S.	S.A.	FAC	ELEC	LTG	MATL

DESIGNED BY: P.WELLS DRAWN BY: J.JOHNSON AREAS LEVELS WORK PKG
DSGN CHK'D BY: CHK'D BY:

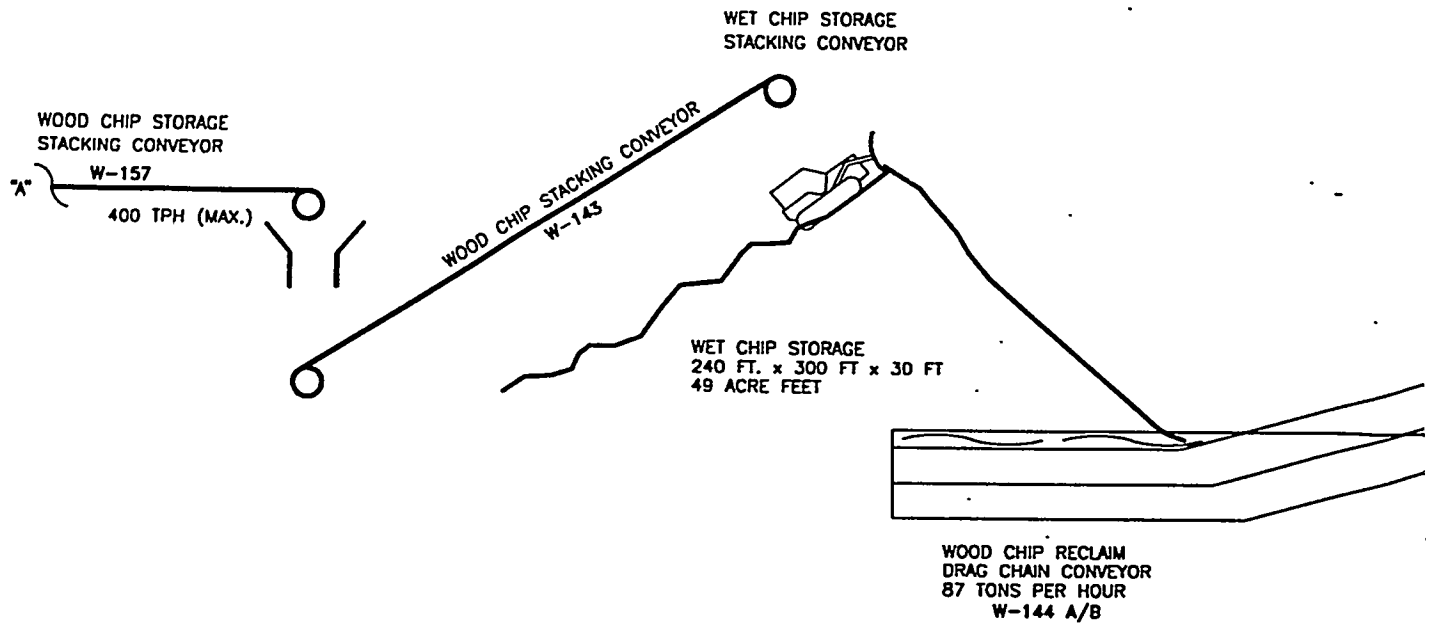

FROM ETHANOL PLANT

W-503

PLOT 1/18

WEYJ9112

ISSUE	DESCRIPTION	CHKD	CORRECT	ISSUE	DESCRIPTION	CHKD	CORRECT	ISSUE	DESCRIPTION
PC ARCH CIVIL CONC STL L&P INST MB	P.E. S.A. FAC ELEC LTG MATL	PC ARCH CIVIL CONC STL L&P INST MB	P.E. S.A. FAC ELEC LTG MATL	PC ARCH CIVIL CONC STL L&	
								2	REVISED EQUIP NU AND QUANTITIES RMV'D WOOD CHIP SILO'S & RLCTD C

REFERENCE:

04996.00-DJ-0910-1
04996.00-DJ-0912-1
04996.00-DJ-0913-1

Figure 2-23
BGCC Ethanol Retrofit -
Fuel/Ash Handling System
Tampella Flue Gas Dryer Case

ISSUE	DESCRIPTION	CHKD	CORRECT	APPD	DATE
1	ORIGINAL ISSUE			POW	TGV 12/5/94

DRAWING NUMBER 04996.00-DJ-0911-2

DESIGNED BY: P.WELLS
DRAWN BY: J.JOHNSON
DSGN CHK'D BY:
CHK'D BY:
AREAS LEVELS WORK PKG

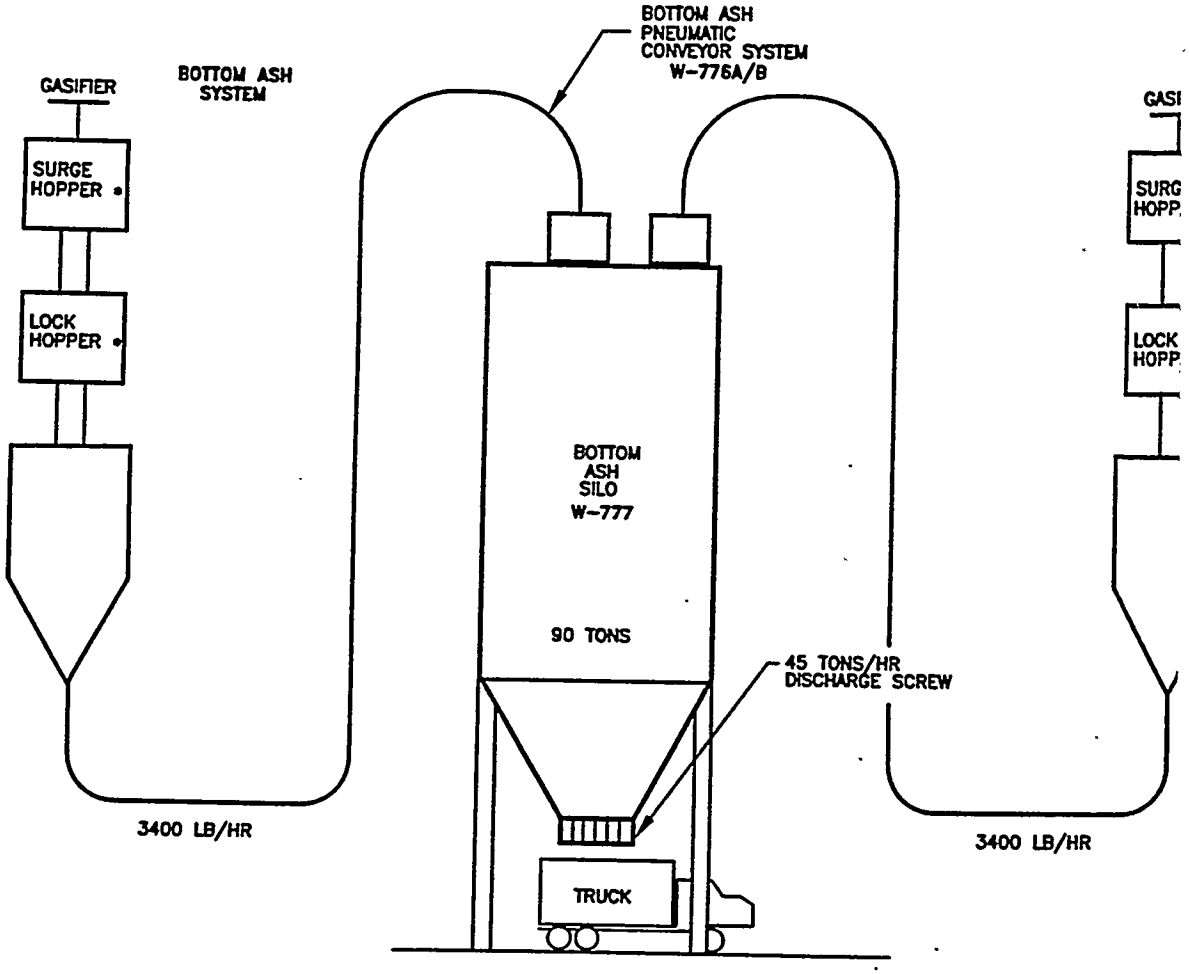

PLOT 12/20

WEYJ9132

ISSUE	DESCRIPTION	CHKD	CORRECT	ISSUE	DESCRIPTION	CHKD	CORRECT	ISSUE	DESCRIPTION
								2	REVISED EQUIP NUM AND QUANTITIES

NOTE:
SEE DWG.0910-1 FOR NOTES.

REFERENCE:
04996.00-DJ-0910-1
04996.00-DJ-0911-1
04996.00-DJ-0912-1

Figure 2-24
BGCC Ethanol Retrofit -
Tampella Flue Gas Dryer Case

1 ORIGINAL ISSUE

DRAWING NUMBER 04996.00-DJ-0913-2

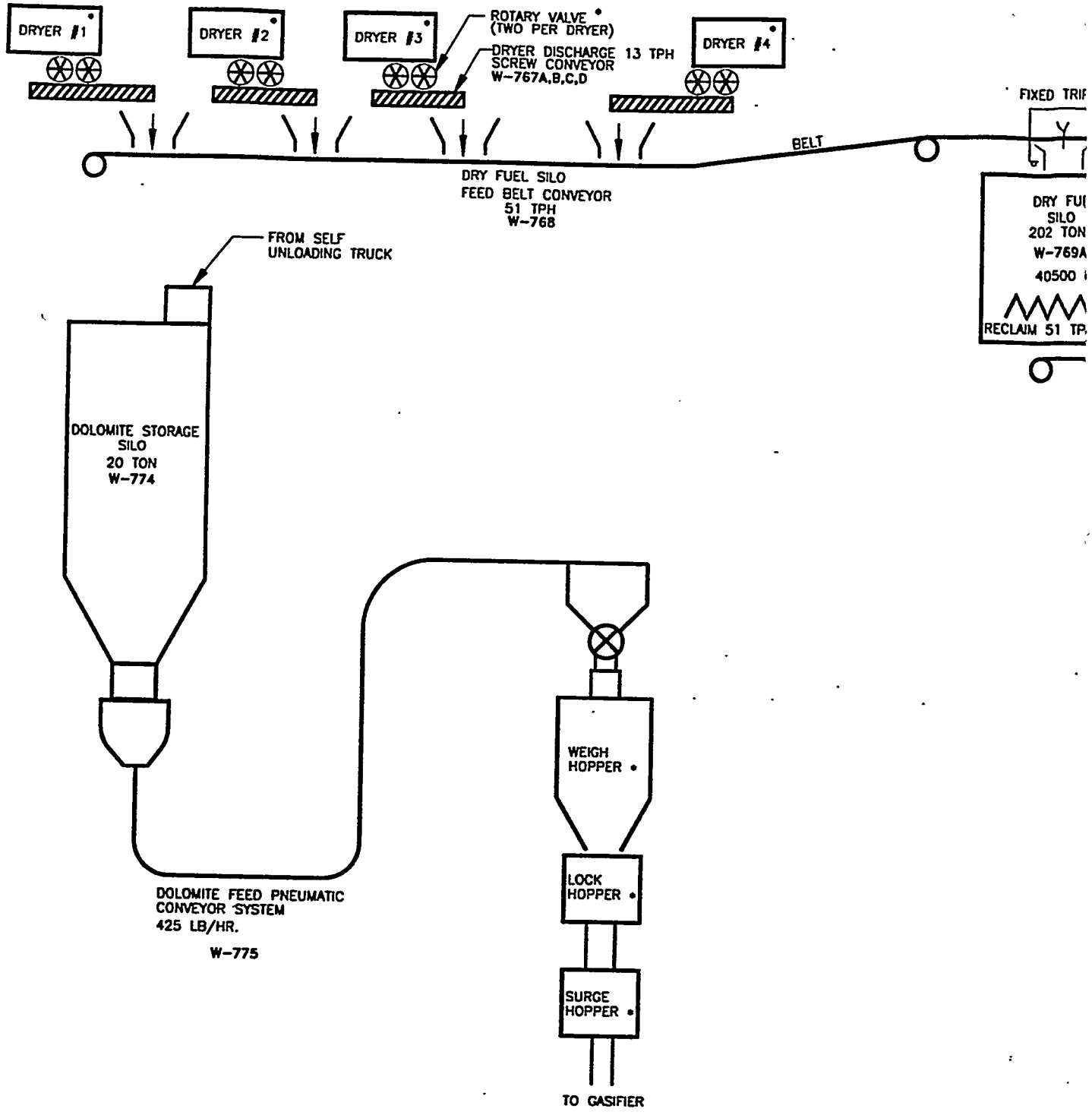

PLOT 1/18

WEYJ9122

ISSUE	DESCRIPTION	CHKD	CORRECT	ISSUE	DESCRIPTION	CHKD	CORRECT	ISSUE	DESCRIPTION
PC ARCH CIVIL CONC STL L&P INST MD	P.S. S.A. FAC ELEC LTG MATL	PC ARCH CIVIL CONC STL L&P INST MD	P.S. S.A. FAC ELEC LTG MATL	PC ARCH CIVIL CONC STL L&P	
				2	REV'D EQUIP NO.'S & ADDED DRYERS, FIXE TRIPPER & EQUIP NO W-775				

NOTE:
SEE DWG.0910-1 FOR NOTES.

REFERENCE:
04996.00-DJ-0910-1
04996.00-DJ-0911-1
04996.00-DJ-0913-1

Figure 2-25
BGCC Ethanol Retrofit -
Tampella Flue Gas Dryer Case

QTYS | 1 | ORIGINAL ISSUE | PDW | TGV 12/5/94

DRAWING NUMBER 04996.00-DJ-0912-2

DESIGNED BY: P.WELLS | DRAWN BY: J.JOHNSON | AREAS | LEVELS | WORK PKG

DSGN CHK'D BY: | CHK'D BY:

Table 2-9: Equipment List - Feed Preparation System (TPS BGCC)

Item No.	Description	Capacity (tons/TPH)	Width (in.)	Speed (fpm)	VCD[1] (ft)	HCD[2] (ft)	Remarks
W-151A,B	Truck Scales	35					8 hr operation for Item W-151 thru W-160
W-152A,B	Truck Dumper Reclaimer with Hopper and Belt Reclaimer	5,600 cu ft	Chain	100			
W-153	Process Building Feed Conveyor	180	48	250	45	250	24 hr operation for all other items
W-154	Reversing Conveyor with Magnetic Metal Detector	180	48	250	0	30	
W-155	Disk Screen	180					
W-156	Wet Fuel Hog	20					5 to 10 percent of flow
W-157	Wet Fuel Storage Pile Feed Conveyor	180	48	250	45	250	
W-158	Wet Fuel Storage Pile Feeder from Existing Hogging Station	60	24	250	50	750	
W-159	Wet Fuel Stacking Surge Bin	65 tons					
W-160	Wet Fuel Stacking Conveyor	240	48	276	30	100	
W-161	Wet Fuel Reclaim Submerged Drag Chain Conveyor	72	54	75	20	70	
W-162	Biomass Dryer Feed Chain Distribution Conveyor	76	54	75	0	80	
W-164	Biomass Dryer Feed Belt Conveyor	76	30	250	60	700	
W-165A,B,C,D	Dryer Feed Surge Hopper	12 tons					12 ft dia x 11 ft high
W-166A,B,C,D	Dryer Feed Screw Conveyor	18			1 down	10	
W-167A,B,C,D	Dryer Discharge Screw Conveyor	10			3 down	25	
W-168	Dry Fuel Silo Feed Belt Conveyor	40	30	240	60	400	
W-169A,B	Dry Silo with Live Bottom Reclaim	158/40					30 ft dia x 45 ft high
W-170	Biomass Feed Belt Conveyor	40	30	240	155	700	
W-172	Biomass Feed Reversing Belt Conveyor	40	30	240	0	45	

[1] Vertical Center Dimension
[2] Horizontal Center Dimension

Table 2-10: Equipment List
Dolomite Receiving, Bed Sand, and Ash Removal Systems for TPS Gasifier

Item No.	Description	Capacity Tons/TPH	VCD[1] ft	HCD[2] ft	Remarks
W-174	Dolomite Storage Silo with Live Bottom	115			
W-175	Dolomite Feed Pneumatic Conveyor System	2,400	100	80	
W-176	Bottom Ash Pneumatic Conveyor System	1,150	50	80	
W-177	Bottom Ash Silo with Discharge Screw	30/15			
W-178	Filter Ash Pneumatic Conveyor System	2,600	60	80	
W-179	Filter Ash Silo with Discharge Screw	62/31			

[1] Vertical Center Dimension
[2] Horizontal Center Dimension

Table 2-11: Equipment List — Feed Preparation System (Tampella BGCC/Flue Gas Dryer)

Item No.	Description	Capacity Tons/TPH	Width in.	Speed fpm	VCD[1] ft	HCD[1] ft	Remarks
W-351A,B	Truck Scales	35					8 hr operation for Item W-351 thru W-360
W-352A,B	Truck Dumper Reclaimer with Hopper and Belt Reclaimer	4,000 cu ft	CHAIN	100			
W-353	Process Building Feed Conveyor	200	48	250	45	250	24 hr operation for all other items
W-354	Reversing Conveyor with Magnetic Metal Detector	200	48	250	0	30	
W-355	Disk Screen	200					
W-356	Wet Fuel Hog	20					5 to 10 percent of flow
W-357	Wet Fuel Storage Pile Feed Conveyor	200	48	250	45	250	
W-358	Wet Fuel Storage Pile Feeder from Existing Hogging Station	60	24	250	50	750	
W-359	Wet Fuel Stacking Surge Bin	65 tons					
W-360	Wet Fuel Stacking Conveyor	260	48	276	30	100	
W-361	Wet Fuel Reclaim Submerged Drag Chain Conveyor	76	54	75	20	70	
W-362	Biomass Dryer Feed Chain Distribution Conveyor	76	54	75	0	80	
W-364	Biomass Dryer Feed Belt Conveyor	76	30	250	60	700	
W-365A, B,C,D	Dryer Feed Surge Hopper	13 tons					12 ft dia x 11 ft high
W-366A, B,C,D	Dryer Feed Screw Conveyor	19			1 down	10	
W-367A, B,C,D	Dryer Discharge Screw Conveyor	12			3 down	25	
W-368	Dry Fuel Silo Feed Belt Conveyor	48	30	240	60	400	
W-369A,B	Dry Silo with Live Bottom Reclaim	190/48					30 ft dia x 45 ft high
W-370	Biomass Feed Belt Conveyor	48	30	240	155	700	
W-371	Biomass Feed Diverter Gate with Chutes	48					
W-372	Biomass Feed Reversing Shuttle Belt Conveyor	48	30	240	0	45	

Table 2-11: Equipment List — Feed Preparation System (Tampella BGCC/Flue Gas Dryer) (Continued)

Item No.	Description	Capacity Tons/TPH	Width in.	Speed fpm	VCD[1] ft	HCD[1] ft	Remarks
W-373A,B	Biomass Feed Transfer Conveyor	48	30	240	0	45	

[1] Vertical Center Dimension
[2] Horizontal Center Dimension

Table 2-12: Equipment List
Dolomite, Ash Handling Systems (Tampella BGCC/Flue Gas Dryer)

Item No.	Description	Capacity Tons/tph	VCD[1] Ft	HCD_2 Ft	Remarks
W-374	Dolomite Storage Silo with Live Bottom	19			
W-375	Dolomite Feed Pneumatic Conveyor System	400	100	80	
W-376	Bottom Ash Pneumatic Conveyor System	3,200	50	80	
W-377	Bottom Ash Silo with Discharge Screw	84/42			
W-378	Filter Ash Pneumatic Conveyor System	1,150	60	80	
W-379	Filter Ash Silo with Discharge Screw	30/15			

[1] Vertical Center Dimension
[2] Horizontal Center Dimension

Table 2-13: Equipment List - Feed Preparation System (Tampella BGCC/Steam Dryer)

Item No.	Description	Capacity Tons/tph	Width in.	Speed fpm	VCD[1] ft	HCD[2] ft	Remarks
W-451A,B	Truck Scales	35					8 hr operation for Item W-451 thru W-460
W-452A,B	Truck Dumper Reclaimer with Hopper and Belt Reclaimer	4,000 cu ft	Chain	100			
W-453	Process Building Feed Conveyor with Magnetic Separator	225	48	250	45	250	24 hour operation for all other items
W-454	Reversing Conveyor with Magnetic Metal Detector	225	48	250	0	30	
W-455	Disk Screen	225					
W-456	Wet Fuel Hog	20					5 to 10 percent of flow
W-457	Wet Fuel Storage Pile Feed Conveyor	225	48	250	45	250	
W-458	Wet Fuel Storage Pile Feeder from Existing Hogging Station	60	24	250	50	750	
W-459	Wet Fuel Stacking Surge Bin	65 tons					
W-460	Wet Fuel Stacking Conveyor	285	48	276	30	100	
W-461	Wet Fuel Reclaim Submerged Drag Chain Conveyor	83	54	75	20	70	
W-464	Biomass Dryer Feed Belt Conveyor	83	30	250	60	700	
W-465A, B,C,D	Dryer Feed Surge Hopper	14 tons					12 ft dia x 11 ft high
W-466	Dryer Feed Screw Conveyor	18			1 down	10	
W-468	Dry Fuel Silo Feed Belt Conveyor	52	30	240	60	400	
W-469A,B	Dry Silo with Live Bottom Reclaim	207/52					30 ft dia x 45 ft high
W-470	Biomass Feed Belt Conveyor	52	30	240	155	700	See Note A
W-471	Biomass Feed Diverter Gate with Chutes	52					
W-472	Biomass Feed Reversing Shuttle Belt Conveyor	52	30	240	0	45	
W-473A,B	Biomass Feed Transfer Conveyor	52	30	240	0	45	

[1] Vertical Center Dimension [2] Horizontal Center Dimension

Table 2-14: Equipment List
Dolomite, Ash Handling Systems (Tampella BGCC/Steam Dryer)

Item No.	Description	Capacity Tons/tph	VCD[1] Ft	HCD[2] Ft	Remarks
W-474	Dolomite Storage Silo with Live Bottom	21			
W-475	Dolomite Feed Pneumatic Conveyor System	440	100	80	
W-476	Bottom Ash Pneumatic Conveyor System	3,400	50	80	
W-477	Bottom Ash Silo with Discharge Screw	91/45			
W-478	Filter Ash Pneumatic Conveyor System	1,500	60	80	
W-479	Filter Ash Silo with Discharge Screw	36/18			

[1] Vertical Center Dimension
[2] Horizontal Center Dimension

Table 2-15: Equipment List - Feed Preparation and Stillage Handling Systems for Amoco Ethanol Plant (Tampella BGCC/Flue Gas Dryer)

Item No.	Description	Capacity (tons/tph)	Width (in.)	Speed (fpm)	VCD[1] (ft)	HCD[2] (ft)	Remarks
W-741	Wood Chip Bypass Belt Conveyor	104	30	250	40	250	
W-742	Lignin Feed Belt Conveyor	130	30	250	50	1900	
W-143	Wood Chip Stacking Conveyor	400	54	360	30	100	
W-144A/B	Wood Chip Reclaim Drag Chain Conveyor (two each)	87	54	75	18	60	
W-147	Biomass Ethanol Feed Belt Conveyor	87	30	250	80	350	
W-151A, B,C,D	Truck Scales (two each for weigh in and weigh out)	35					8 hr operation for
W-152A,B,C	Truck Dumper Reclaimer with Hopper and Belt Reclaimer	5,600 cu ft	Chain	125			Item W-141 thru W-760
W-153	Process Building Feed Conveyor	400	48	250	45	250	24 hr operation for
W-154	Reversing Conveyor with Magnetic Metal Detector	400	48	250	0	30	all other items
W-155	Disk Screen	400					
W-156	Wet Fuel Hog	40					5 to 10 percent of flow
W-157	Wet Fuel Storage Pile Feed Conveyor	400	48	250	45	250	
W-758	Wet Fuel Storage Pile Feeder from Existing Hogging Station	60	24	250	50	750	
W-759	Wet Fuel Stacking Surge Bin	65 tons					
W-760	Wet Fuel Stacking Conveyor	60	48	276	30	100	
W-761	Wet Fuel Reclaim Submerged Drag Chain Conveyor	78	54	75	20	70	
W-762	Biomass Dryer Feed Chain Distribution Conveyor	78	54	75	0	80	
W-764	Biomass Dryer Feed Belt Conveyor	78	30	250	60	700	
W-765A,B,C,D	Dryer Feed Surge Hopper	13 tons					12 ft dia x 11 ft high
W-766A,B,C,D	Dryer Feed Screw Conveyor	19			1 down	10	

Table 2-15: Equipment List - Feed Preparation and Stillage Handling Systems for Amoco Ethanol Plant (Tampella BGCC/Flue Gas Dryer) (Continued)

Item No.	Description	Capacity (tons/tph)	Width (in.)	Speed (fpm)	VCD[1] (ft)	HCD[2] (ft)	Remarks
W-767A,B,C,D	Dryer Discharge Screw Conveyor	13			3 down	25	
W-768	Dry Fuel Silo Feed Belt Conveyor	51	30	240	60	400	
W-769A,B	Dry Silo with Live Bottom Reclaim	202/51					30 ft dia x 45 ft high
W-770	Biomass Feed Belt Conveyor	51	30	240	155	700	
W-771	Biomass Feed Diverter Gate with Chutes	51					
W-772	Biomass Feed Reversing Shuttle Belt Conveyor	51	30	240	0	45	
W-773A,B	Biomass Feed Transfer Conveyor	51	30	240	0	45	

[1] Vertical Center Dimension
[2] Horizontal Center Dimension

Table 2-16: Equipment List
Dolomite Receiving, Ash Handling (Amoco Ethanol Plant and Tampella BGCC/Flue Gas Dryer)

Item No.	Description	Capacity (tons/tph)	VCD[1] (ft)	HCD[2] (ft)	Remarks
W-774	Dolomite Storage Silo with Live Bottom	20			
W-775	Dolomite Feed Pneumatic Conveyor System	425	100	80	
W-776	Bottom Ash Pneumatic Conveyor System	3,400	50	80	
W-777	Bottom Ash Silo with Discharge Screw	90/45			
W-778	Filter Ash Pneumatic Conveyor System	1,170	60	80	
W-779	Filter Ash Silo with Discharge Screw	28/14			

[1] Vertical Center Dimension
[2] Horizontal Center Dimension

2.5 Plot Plans and Balance of Plant

Stone & Webster developed preliminary plot plans, building descriptions, and balance of plant descriptions to support the estimating effort. Because the BGCC and ethanol plants use several of the mill's existing utility systems, the balance of plant requirements are reduced.

This section describes the generic plot plan for the BGCC plant and ethanol plant, the balance of plant systems for both plants, and the buildings associated with both plants.

2.5.1 BGCC

Plot Plan

The location and orientation of major buildings and components forms the basis for the design of the material handling systems and the layout of interconnecting piping systems. The starting point for development of the plan was Figure 2-26, Drawing No. 090-09-007 Revision 2, New Bern Mill Storm Water Collection System Plan, provided by Weyerhaeuser, since it provided the best readily available "as-built" information.

Placement of the BGCC plant requires relocating the existing bark pile as shown on Figure 2-26, to a new location northeast of the powerhouse. The new location is shown on Figure 2-27, Plot Plan - BGCC Retrofit (Drawing No. 05996.00-EM-1A). This provides adequate space for location of the Frame 6B combustion turbine and HRSG without affecting existing roadways and railroad tracks. Pipe racks carry steam, feedwater, condensate and other piping over roadways and railroad tracks to the mill powerhouse.

The flue gas biomass dryers are located to the east of the HRSG flue gas discharge. The four dryers are oriented with centerlines running north-south. Flue gas and feedstock biomass enter on the south end and discharge on the north end. Two stacks are provided for the four dryer trains. The steam dryer (not shown) would also be placed here.

The bark pile is located approximately 600 feet from the dryers to the east. This spacing is required to keep conveyor sloping to less than 15 degrees. The truck dumping station and feedstock process building are located on the east end of the bark pile. The stacker with inlet hopper is located on the north side of the bark pile and can receive feedstock via belt conveyor from the process building and from the existing bark sizing system. The existing bark hogging station is being relocated slightly to allow for alignment of these conveyors.

Dry fuel silos are located on the northwest corner of the proposed bark pile and are aligned to provide sufficient horizontal distance to receive dry fuel by belt conveyor from the dryer discharge and to send dry fuel to the gasifier area. A horizontal distance of 700 feet is necessary for the discharge of the conveyor to push the inlet of the gasifier which is anticipated to be 155 feet above grade. Electrical and mechanical equipment buildings are located adjacent to the gasifier building. The nitrogen system area and fuel oil day tank with emergency dike are also located in this area.

Dolomite and ash silos are placed west of the gasifier structure and allow for easy access by truck.

The auxiliary condensing steam turbine is located south of the existing railroad tracks and east of pipe racks. This placement accommodates tie-in of steam and condensate piping from the pipe racks as well as minimizing water piping to and from the planned mill cooling tower which will service mill process

cooling needs as well as those of the proposed BGCC complex. This cooling tower is located east of the existing powerhouse and south of the railroad tracks.

Utility and Balance of Plant Systems

The balance of plant items for both the TPS and Tampella design cases are similar. Where applicable, differences in capacity and design requirements are described.

Control System. A distributed control system is provided for the BGCC plant. The system, including five video display units (VDU) will be located in the existing mill powerhouse control room.

Electrical System. The following electrical system design was used as the basis for costing for the electrical system:

- Tie-ins will be made to the mill's existing 13.8 kV system.
- Motors above 1,000 horsepower will draw power from the 13.8 kV bus. Motors 250 to 1,000 horsepower will draw power from the 4.16 kV bus, and motors ½ horsepower to 250 horsepower will draw power from the 480 V bus. Motors below ½ horsepower will draw power from 110 V distribution panels.

The GE Frame 6B Gas turbine and the auxiliary steam turbine will feed the 13.8 kV bus that is tied into the mill's existing electrical distribution system. The fuel gas booster compressor required in the TPS system will be fed from the 13.8 kV bus. A step-up transformer is provided to tie into the 115 kV grid for export of power. A stepdown transformer is provided to feed a 4.16 kV bus that will power large motors including process air compressors, dryer induced draft (ID) fans, and dryer circulators. A stepdown transformer will be provided to feed a 480 V system to feed remaining loads. Load centers, switchgear, and motor control centers will be housed in an electrical equipment building, located in the BGCC plant area.

Boiler Feedwater and Condensate System. The mill has a common boiler feedwater system to serve the recovery boiler and the existing bark boiler. Since the BGCC plant would replace the bark boiler, the existing feedwater system will simply be repiped to serve the HRSG. The system is capable of delivering deaerated boiler feedwater to the BGCC plant at 303°F and 900 psig. A 6-inch Schedule 40 carbon steel line with appropriate valving will be routed from the existing mill powerhouse on a pipe rack over railroad tracks to the BGCC area. This pipe rack will also be used to carry steam and condensate lines back from the HRSG and from the auxiliary steam turbine. Two 100 percent capacity pumps are provided to return condensate from the auxiliary steam turbine. Pressure of the condensate at the discharge from the Tampella steam dryer is expected to be adequate for return to the mill condensate system. Condensate lines will be 4-inch Schedule 40 carbon steel. Rough quantities of piping in these systems were estimated and served as input for establishing the bulk material factor for piping, and valves.

Cooling Water System. The cooling water system removes heat from the following components associated with the BGCC plant:

- Combustion Turbine
- Auxiliary Steam Turbine
- Auxiliary steam turbine condenser (only TPS case provides BGCC steam to this turbine)
- Bottom ash discharge water cooled screw conveyors
- Filter ash discharge water cooled screw conveyor

- Process air compressor jacket cooling system (Tampella cases)
- Process air precooling heat exchanger upstream of the process air compressor (Tampella cases)
- Biogas water scrubber cooler (TPS case)

The Tampella BGCC plant requires 1300 gpm of cooling water. The TPS BGCC requires an additional 6,000 gpm split between biogas water scrubber cooler and the auxiliary steam turbine condenser.

The New Bern mill plans to install a new forced draft cooling tower to meet its process cooling needs and is defining the cooling tower design with the Marley Company. Marley was contacted to obtain an incremental cost for an additional cooling tower cell to serve the BGCC project. This value has been included in the capital cost estimate. Rough quantities of piping in this system were estimated and served as input for establishing the bulk material factor for piping.

Flare System. The flare system safely disposes of intermittent flows of combustible gases from various relief and bypass lines in the BGCC plant fuel gas processing train. It is designed to handle the entire flow from the gasification system in the event of an emergency shutdown of the gas turbine when operating at full-capacity. Complete combustion of the gas flow is required and must be accomplished in a safe, reliable manner.

The purge gas line (from the gasifier section) and the fuel line (from the gas turbine) are connected to the flare gas header system. Each header is continuously purged with nitrogen to prevent air from entering the system. The headers are connected to the flare gas inlet pipe which enter the flare knockout drum. The gas leaving the knockout drum enters the flare stack and is ignited by pilot flares. A nitrogen purge line also connects to the flare stack. Plant air, clean fuel gas, and auxiliary fuel gas (propane) are connected to the ignitor and to the pilot flares. Liquid, collected in the flare knockout drum, is pumped by the two process condensate pumps to the mill's secondary wastewater treatment system.

Nitrogen System. The nitrogen distribution system for the BGCC plant provides high pressure nitrogen for filter pulse cleaning, inerting, purging and blanketing of the plant equipment. The Tampella cases require a substantial amount for charging of lock and surge hoppers associated with biomass and dolomite feed to the gasifier, and discharge of bottom ash and filter ash. Nitrogen is purchased from a supplier who will provide an onsite generation system sized for the continuous nitrogen requirements. For the Tampella design, the nitrogen supplier will also include a liquid nitrogen storage tank and high volume vaporizer for rapid inerting of the gasifier in the event of an emergency shutdown.

The continuous nitrogen system supplies the Tampella system with a total of about 7,000 lb/hr of nitrogen at 600 psig. The TPS gasifier requires a continuous flow of approximately 700 lb/hr.

Service Air and Instrument Air System. This system provides air to the BGCC plant for operating maintenance equipment, and for powering air operated valves and dampers, and for other instrumentation needs. A 150 hp air compressor is sized for 580 scfm at 100 psig. This compressor will feed a 1,060 gallon (142 cubic feet) service air receiver. From this receiver, service air piping is routed throughout the BGCC plant for use in maintenance activities. Instrument air is processed through a prefilter, dryer, and after-filter before being routed to various instrument needs. The sizing of this system was based on estimated needs provided by Tampella. It was assumed that the TPS gasifier design would be comparable.

Fuel Oil System. The fuel oil system provides No. 2 distillate fuel oil to the gas turbine for startup and backup when the gasifier is out of service. Fuel oil is also required for initial heating of the gasifier refractory lined vessels. The fuel oil day tank is sized for eight hour operation of the combustion turbine.

Bulk quantities of fuel oil are delivered from off site by truck to existing on-site storage tanks located south of the powerhouse building. A positive displacement fuel oil transfer pump will take 30 gpm of fuel oil through a 2-inch diameter supply to the 25,000 gallon fuel oil day tank located in the BGCC area. The fuel oil day tank is surrounded by an emergency dike approximately 30 feet in diameter by 6 feet high. A positive displacement pump feeds fuel oil to the combustion turbine and to the gasifier as required.

Fire Protection Systems. The BGCC fire protection systems are fed by existing yard fire protection systems in the vicinity. An allowance has been made in the capital cost estimate for additional yard piping, including three new deluge water systems to serve transformers, dry fuel storage silos and dryers, and six hose stations for general response to area fires. A high pressure local application carbon dioxide suppression system is supplied with the combustion turbine.

Potable Water System. Potable water is provided to hose bibs in the BGCC area for wash downs, and to eye wash stations and emergency showers provided for personnel safety. This piping system carries water from the mill potable water system.

Sanitary Water System. This system routes sanitary drain water from the BGCC plant to the mill sanitary sewer. An allowance for sanitary water system piping has been provided as input for establishing the bulk material factor for piping.

Waste Water System. Waste water streams such as effluent from blow down tanks, SCR unit discharge, biogas absorption tower discharge, and biogas water scrubber discharge are routed to the existing mill waste water treatment system. An allowance for waste water system piping of 600 feet of 4-inch diameter ductile iron piping has been provided as input for establishing the bulk material factor for piping. The waste water system is tied into the existing mill system.

Storm Water Runoff System. The system collects and disposes storm water runoff from the BGCC plant areas. An allowance for storm water drain system improvements has been incorporated into site improvements. The storm water drain system is connected to the existing mill system.

Buildings and Structures

The climate at the New Bern mill is mild. Therefore, the main components of the BGCC plant such as the gasifier, combustion turbine and HRSG are not enclosed in buildings. This is typical of installations of this type of equipment in similar climates. Enclosures are provided for electrical components and high maintenance mechanical equipment to provide protection from dust contamination. Structures are provided to support system components and provide access for inspections and maintenance. Personnel access and egress must also be provided in accordance with applicable life safety codes, and standards (i.e., OSHA, NFPA 101).

Structures will be similar for all BGCC plant cases.

Gasifier Structure. The gasifier structure is approximately 60 feet by 60 feet by 180 feet tall. It is an open structure with a roof designed to house the gasifier system and provide access for inspection and maintenance. The structure is a steel frame with grating on each level. Two stair towers are provided in the structure. Major components are serviced using mobile cranes and hoists as required. The foundation is on piles. This structure provides the support for all gasifier components as well as material handling system components including biomass feed, dolomite feed and ash removal system. All floors,

platforms, railings, and stairs are designed in accordance with OSHA requirements for personnel access and safety.

Compressor Enclosure. The compressor enclosure abuts the north wall of the gasifier structure and houses the booster air compressors providing makeup air to the gasifier. This one story structure, approximately 60 feet by 40 feet by 28 feet in height, is a pre-engineered building with steel framing and siding. The compressor enclosure is ventilated with roof exhaust fans and inlet louvers with filters. Heating is provided with steam unit heaters. The foundation of this structure is integrated with the gasifier structure.

Service Building. This is a one story pre-engineered, metal-sided building, approximately 40 feet by 60 feet, with a spread-footing foundation. The building will contain miscellaneous mechanical equipment including the service and instrument air compressors. The building is ventilated with roof exhaust fans and associated inlet louvers. Heating is provided with steam unit heaters.

Electrical Building. This building is a pre-engineered building similar to the mechanical buildings described above. Ventilation consists of roof mounted heating and ventilation units with filters and direct expansion air conditioning. The building will contain electrical cabinets, instrument racks, motor control centers (MCCs) and switchgear. The building is slightly pressurized to prevent the intrusion of dust.

Nitrogen Skid Area. The continuous nitrogen generation system and the liquid nitrogen storage and vaporization equipment are located on a slab with spread footings.

Gas Turbine. The gas turbine is provided with a weatherproof enclosure. The foundation rests on piles.

Biomass Dryers. Biomass dryers and associated equipment including induced draft fans, primary and secondary separators, hoppers and screw feeding equipment are located on a slab with spread footings.

Auxiliary Steam Turbine Building. The auxiliary steam turbine will be housed in a pre-engineered structure with removable panels to facilitate maintenance. This building is approximately 70 feet long by 30 feet wide by 40 feet high. The building is ventilated with roof exhaust fans and inlet louvers and heated with steam unit heaters. The foundation for this building rests on piles.

Condenser Enclosure. The condenser enclosure abuts the south wall of the auxiliary turbine building and houses the condenser and its accessories. This is a once-story pre-engineered building approximately 40 feet by 30 feet high with steel framing and siding. The condenser enclosure will be ventilated with roof exhaust fans and inlet louvers and heated with steam unit heaters. The foundation of this structure is integrated with the auxiliary steam turbine building.

Process Building. The process building houses disk screening and hogging equipment. This structure is engineered and supplied by the biomass handling equipment vendor. No heating or ventilation is required for this building.

2.5.2 Ethanol Plant

Plot Plan

The development of the plot plan for the ethanol plant was started from an existing as-built New Bern Mill drawing previously mentioned as Figure 2-26. Figure 2-27, Plot Plan - BGCC/Ethanol Retrofit

Drawing No. 04996.00-EM-1B, superimposes a plot plan for the BGCC plant and the ethanol plant on the mill drawing.

The extreme south end of the mill site appeared to be the best location for the ethanol plant. Adequate space is available for feedstock receiving and storage, as well as the main ethanol plant process systems, structures, and components. This location will allow the ethanol plant to operate with little if any impact on the mill activities.

Three feedstock truck dumping stations are located on the northern most end of the ethanol plant complex. These stations feed a single conveyor system which transports feedstock through a processing building and then to a 21-day wood chip storage pile. The BGCC plant associated with the ethanol plant does not include new feedstock receiving and processing equipment, because all new feedstock for the BGCC system is processed through the ethanol plant receiving system.

Feedstock is carried from the wood chip storage pile directly to the pretreatment building 350 feet to the south. Wood chips are conveyed to the chip bin at the top of the pretreatment building (el. 80 ft). The processed wood flows downward as it moves from the chip preheater through the hydrolyzer, to flash cooling stages at grade level. The material is then conveyed to the first of 10 fermenters located outdoors to the south of the pretreatment building.

The fermenting slurry flows through the fermenters in a cascading mode starting with smaller fermenters located nearest the pretreatment building and ending at the final larger vessel (beer well) located at the south west point. These vessels have been arranged with adequate spacing to locate fermenter coolers adjacent to each serviced fermenter.

Fermented beer is pumped from the last vessel (beer well) to the distillation unit located outdoors on the west side of the pretreatment building.

The stillage handling building, located next to the west end of the distillation system, processes the distillation residue or bottoms. The chiller building which houses the chilled water system and the service and instrument air systems is located south of the stillage building and west of the fermenters.

The yeast building, east of the pretreatment building, contains all vessels and equipment necessary to propagate yeast for fermentation. The chemical mix building, next to yeast preparation, contains the vessels for CIP and lime slurry preparation. The chemical storage tanks are located outdoors in a diked area adjacent to the chemical mix building. Truck unloading roadway space is provided along side of the diked area.

Alcohol storage tanks and denaturant storage are located in diked areas between the rail line and the ethanol plant ring road. The rail spur has been extended and rail car loading facilities are located close to alcohol storage.

A 1,900 foot long belt conveyor carries lignin stillage and bypassed wood chip feedstock to the BGCC plant. The structure carrying this belt can also be used to run steam, cooling water and other balance of plant system piping.

The existing mill firewater, sanitary sewer, wastewater sewer, stormwater sewer, potable water, and process water systems will be extended into the ethanol plant area. The ethanol plant consumes approximately 364 gpm of process water and produces about 726 gpm of wastewater.

The remaining support systems for the ethanol plant include the following

Control System. A distributed control system is provided for the ethanol plant. The system with video display units will be located in the pretreatment building.

Electrical System. A 4.16 kV feeder from the BGCC plant will serve the ethanol plant.

Service Air and Instrument Air. A packaged system is provided to supply 200 scfm of air at 100 psig to the ethanol plant users.

Steam and Condensate. High pressure and medium pressure steamlines are provided from the BGCC plant to the ethanol plant. Condensate is returned to the existing mill deaerator.

Cooling Water System. The ethanol plant has the following cooling water requirements:

	Rate gpm
LP Flash Condenser (T-201)	1,531
Distillation and Dehydration	6,500
Stillage Cooler (T-501)	948
Filter Vacuum Pumps (P-504)	150
	9,129

This additional load was added to the planned mill cooling tower (along with the cooling load of the BGCC plant) and the incremental cost to accommodate the ethanol plant requirements was estimated by the cooling tower vendor. This value has been included in the capital cost estimate. Rough quantities of piping in this system were estimated and served as input for establishing the bulk material factor for piping.

Chilled Water System. The ethanol plant requires chilled water at a supply temperature 45°F with a return temperature of 65°F for process cooling. The total duty is 1,961 tons of refrigeration corresponding to a chilled water flow rate of 2,476 gpm, distributed among users as follows:

	Load MM Btu/hr	Rate gpm	Refrigeration Tons
Process Water Cooler (T-201)	3.7	492	308
Recycle Cooler (T-502)	4.3	426	355
Fermenter Coolers	13.0	1,518	1,265
Yeast Propagation	0.4	40	33
	21.4	2,476	1,961

An ammonia chiller is provided to supply the chilled water. The chiller system includes a shell and tube evaporator and screw compressor on a skid to be located in the chiller building along with associated chilled water pumps and piping. An air cooled evaporative condenser is mounted on the chiller building roof.

Buildings and Structures

Chiller Building. The compressor/evaporator and chilled water pumps are located on grade in this building with the condenser located on the roof of the structure. The service air and instrument air system for the ethanol plant are also located in this building. The building is a pre-engineered, metal-sided design with dimensions of 30 by 50 feet. A pile-supported slab foundation is required.

Pretreatment Building. The pretreatment building is a 50 feet by 50 feet by 80 feet high steel-framed structure with siding and stairwells. This building contains four levels to house the chip bin, chip preheater, hydrolyzer, and flash cooling stages of the process. The building is ventilated by exhaust fans on the upper level. Heating is provided with steam unit heaters. The ethanol plant control room containing the distributed control system (DCS) equipment is also located in this building. Air conditioning and lavatory facilities are provided for the control room. The foundation is a slab supported on piles.

Yeast Building. The yeast building is a pre-engineered building 40 feet by 50 feet by 40 feet high. The building is ventilated by roof exhaust fans. Heating is provided with steam unit heaters. The foundation is a slab on grade.

Chemical Mixing Building. The chemical mixing building is a pre-engineered building 25 feet by 50 feet by 20 feet high. The building is ventilated by roof exhaust fans and heated with steam unit heaters. The foundation is a slab on grade.

Stillage Handling Building. The stillage handling building is a pre-engineered type building 100 feet by 100 feet by 30 feet high, containing heavy rotary vacuum filters and centrifuges. The building is ventilated by roof exhaust fans and heated with steam unit heaters. The foundation is a slab supported on piles.

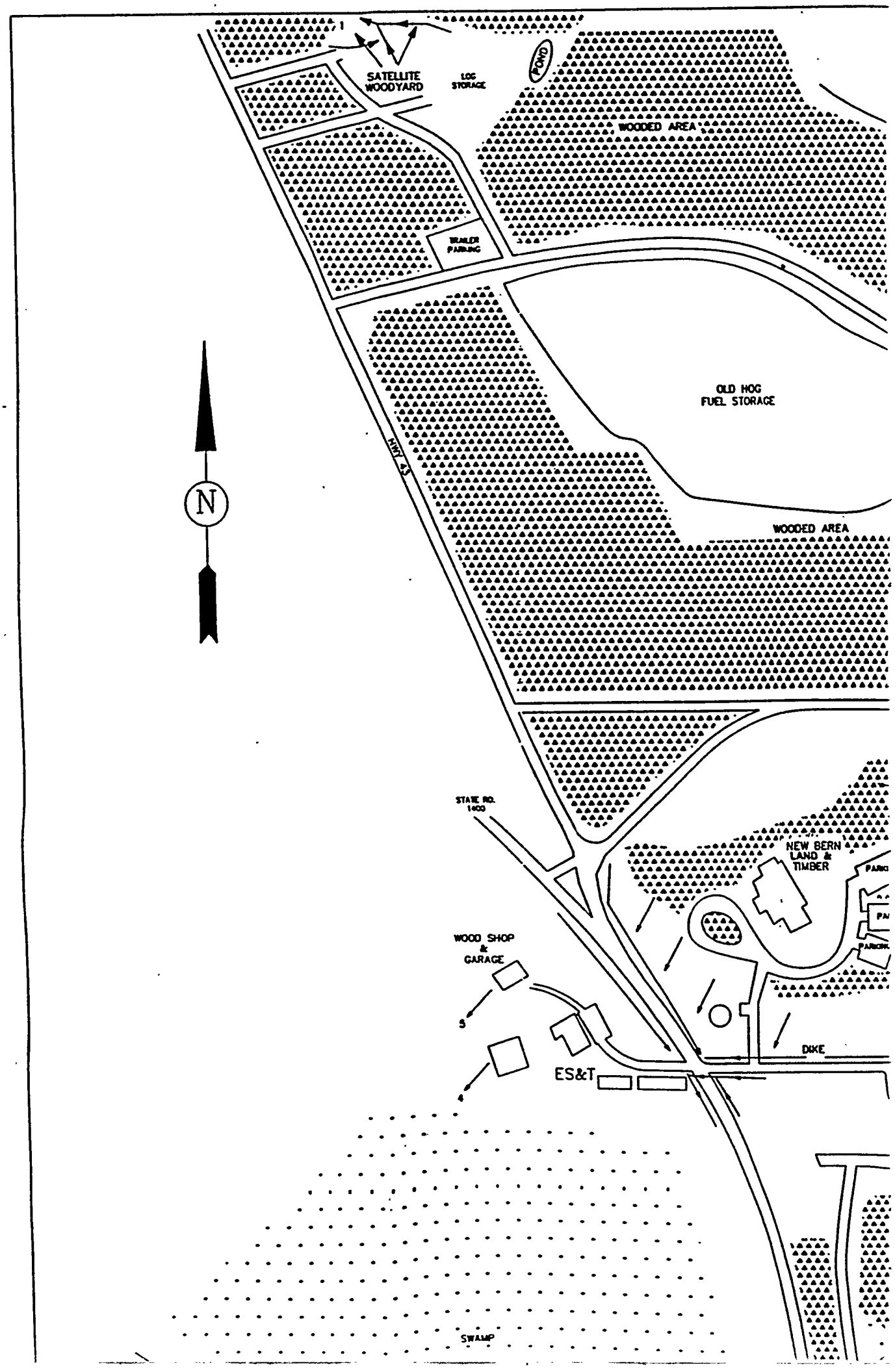
SATELLITE WOODYARD
LOG STORAGE
POND
WOODED AREA
TRAILER PARKING
OLD HOG FUEL STORAGE
HWY 43
N
WOODED AREA
STATE RD. 1400
NEW BERN LAND & TIMBER
WOOD SHOP & GARAGE
5
4
ES&T
DIKE
SWAMP

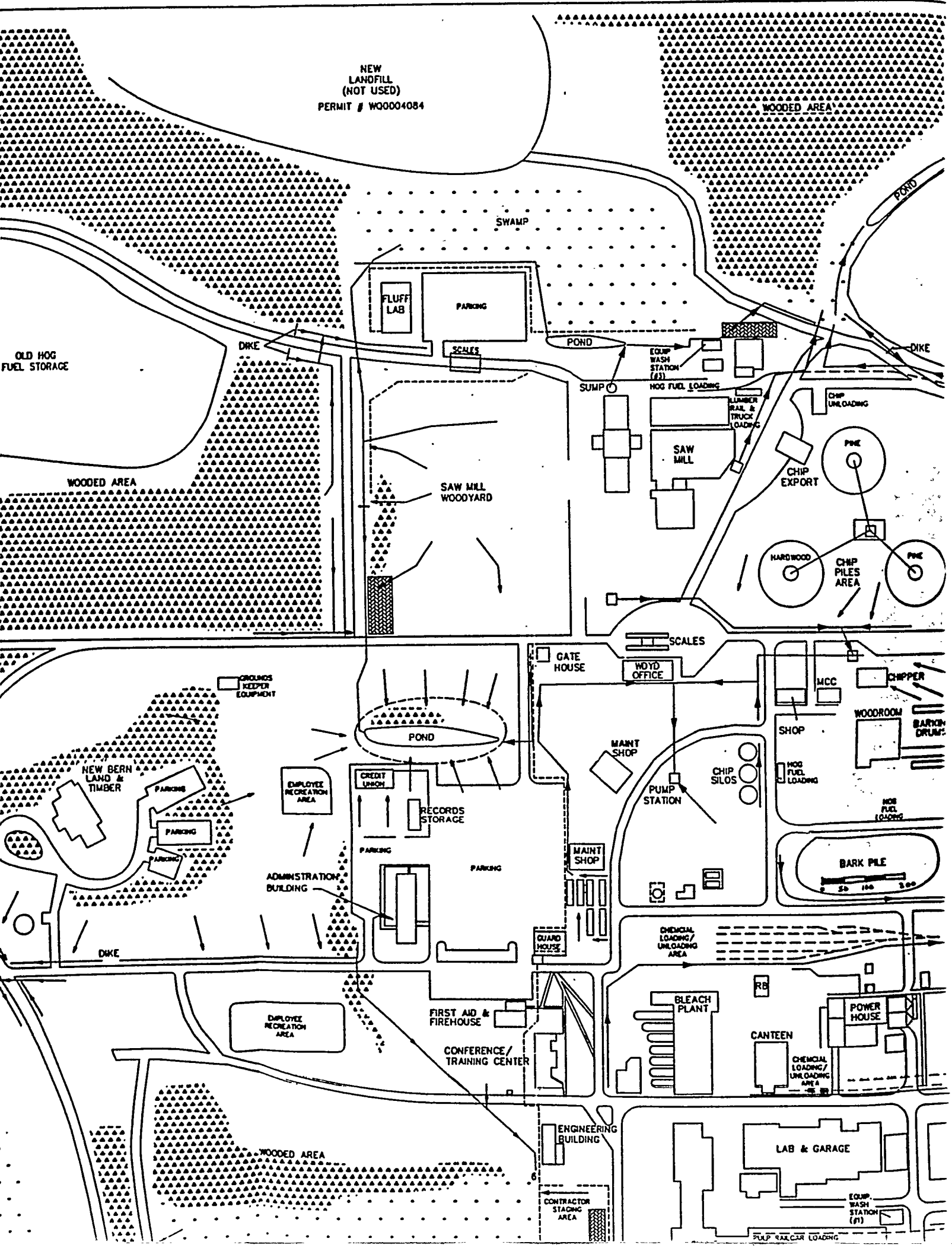
NEW
LANDFILL
(NOT USED)
PERMIT # WQ0004084
WOODED AREA
POND
SWAMP
FLUFF
LAB
PARKING
SCALES
POND
DIKE
OLD HOG
FUEL STORAGE
DIKE
EQUIP
WASH
STATION
(#3)
HOG FUEL LOADING
SUMP
LUMBER
RAIL &
TRUCK
LOADING
CHIP
UNLOADING
SAW
MILL
CHIP
EXPORT
PINE
WOODED AREA
SAW MILL
WOODYARD
HARDWOOD
CHIP
PILES
AREA
PINE
SCALES
GATE
HOUSE
WDYD
OFFICE
MCC
CHIPPER
WOODROOM
SHOP
GROUNDS
KEEPER
EQUIPMENT
POND
MAINT
SHOP
CHIP
SILOS
HOG
FUEL
LOADING
NEW BERN
LAND &
TIMBER
PARKING
EMPLOYEE
RECREATION
AREA
CREDIT
UNION
RECORDS
STORAGE
PUMP
STATION
PARKING
PARKING
PARKING
MAINT
SHOP
BARK PILE
ADMINISTRATION
BUILDING
GUARD
HOUSE
CHEMICAL
LOADING/
UNLOADING
AREA
DIKE
RB
BLEACH
PLANT
POWER
HOUSE
EMPLOYEE
RECREATION
AREA
FIRST AID &
FIREHOUSE
CANTEEN
CONFERENCE/
TRAINING CENTER
CHEMICAL
LOADING/
UNLOADING
AREA
ENGINEERING
BUILDING
WOODED AREA
LAB & GARAGE
CONTRACTOR
STAGING
AREA
EQUIP
WASH
STATION
(#1)
PULP RAILCAR LOADING

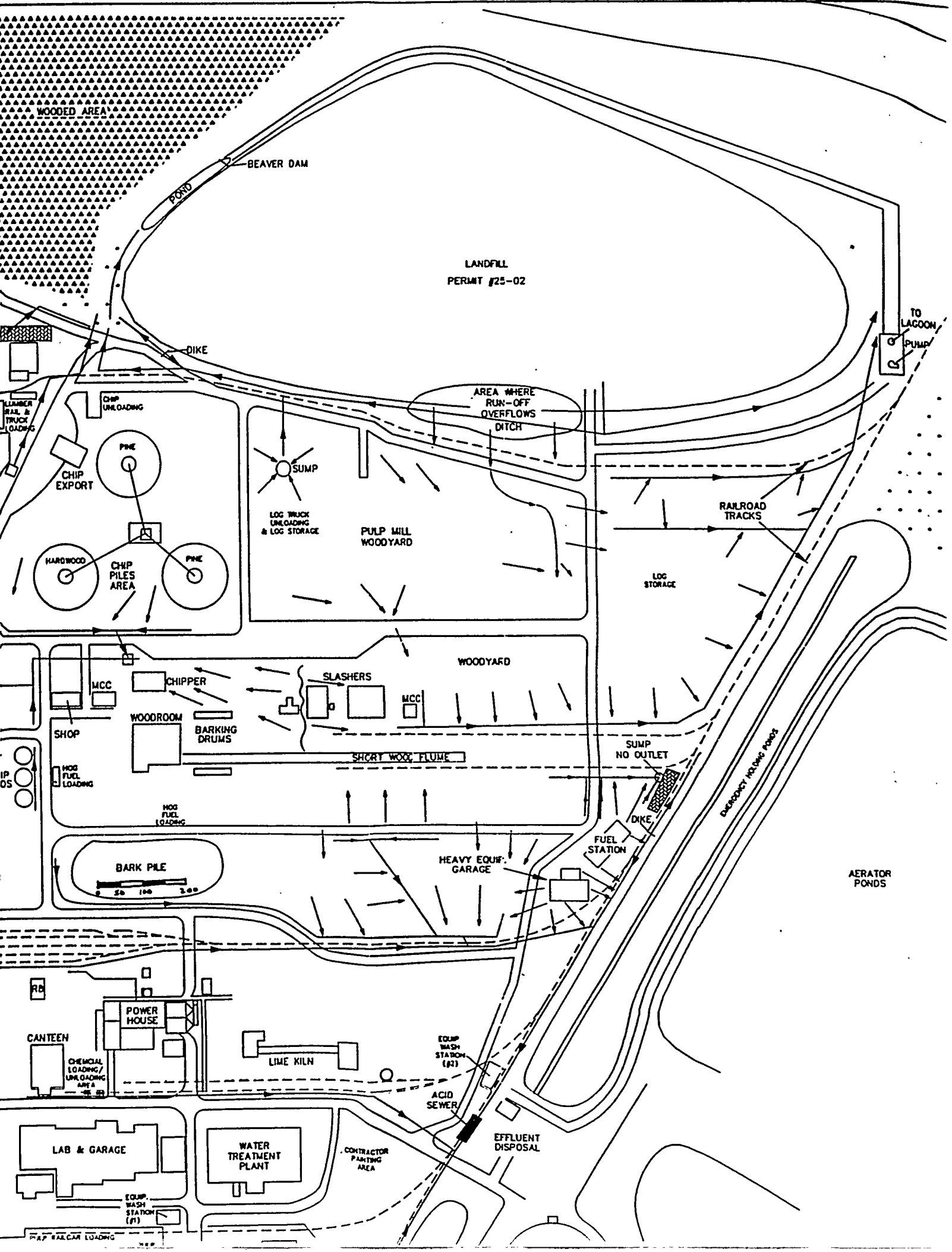
WOODED AREA
BEAVER DAM
POND
LANDFILL
PERMIT #25-02
DIKE
TO LAGOON
PUMP
AREA WHERE RUN-OFF OVERFLOWS DITCH
CHIP UNLOADING
LUMBER RAIL & TRUCK LOADING
PINE
CHIP EXPORT
SUMP
LOG TRUCK UNLOADING & LOG STORAGE
PULP MILL WOODYARD
RAILROAD TRACKS
LOG STORAGE
HARDWOOD
PINE
CHIP PILES AREA
WOODYARD
MCC
CHIPPER
SLASHERS
MCC
SHOP
WOODROOM
BARKING DRUMS
SHORT WOOD FLUME
SUMP NO OUTLET
HOG FUEL LOADING
HOG FUEL LOADING
DIKE
EMERGENCY HOLDING PONDS
FUEL STATION
HEAVY EQUIP. GARAGE
BARK PILE
AERATOR PONDS
RB
POWER HOUSE
CANTEEN
CHEMICAL LOADING/UNLOADING AREA
LIME KILN
EQUIP WASH STATION (#2)
ACID SEWER
EFFLUENT DISPOSAL
LAB & GARAGE
WATER TREATMENT PLANT
CONTRACTOR PARKING AREA
EQUIP. WASH STATION (#1)
RAILCAR LOADING

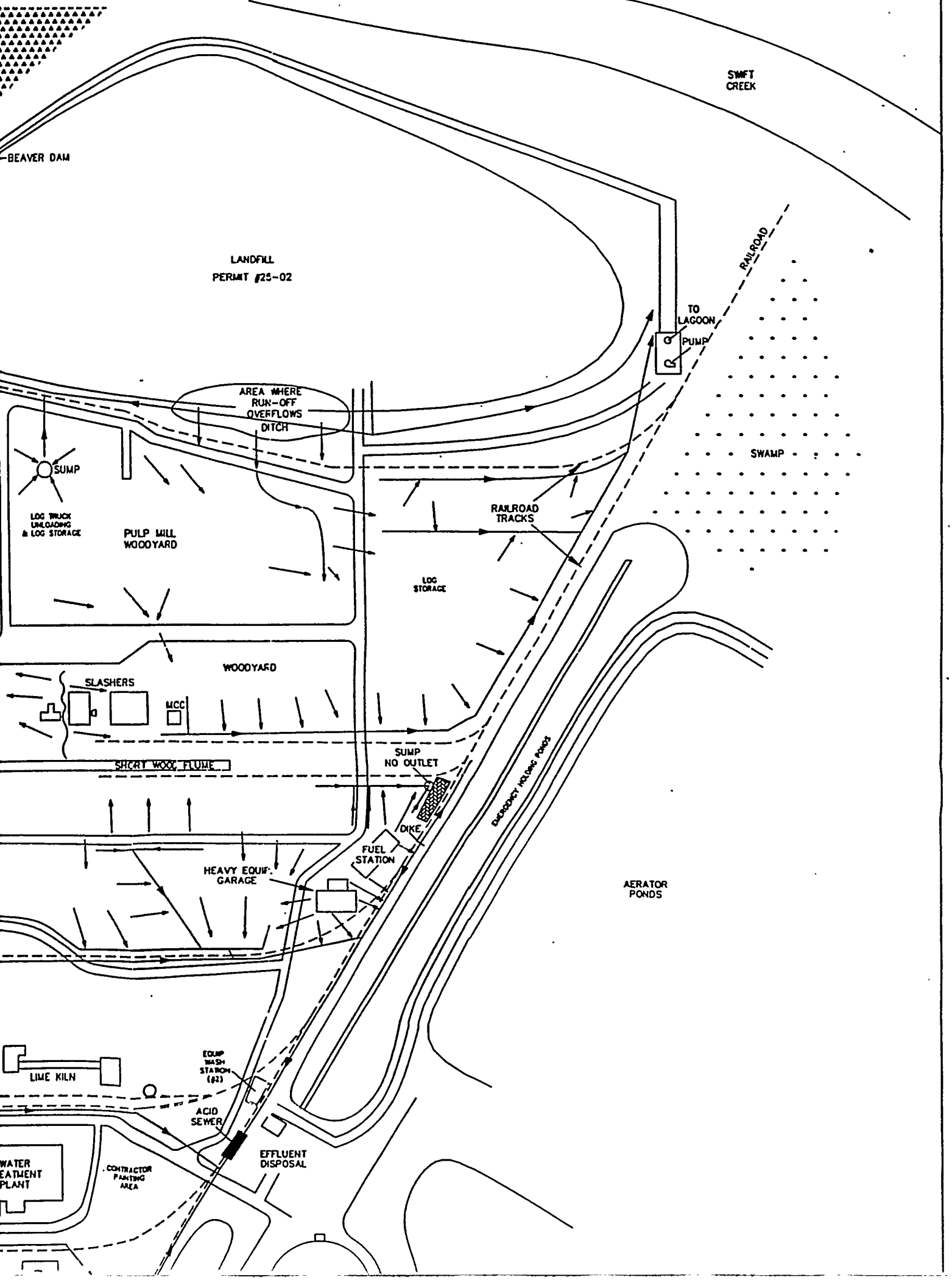
SWIFT CREEK
BEAVER DAM
LANDFILL
PERMIT #25-02
RAILROAD
TO LAGOON
PUMP
AREA WHERE RUN-OFF OVERFLOWS DITCH
SUMP
SWAMP
LOG TRUCK UNLOADING & LOG STORAGE
PULP MILL WOODYARD
RAILROAD TRACKS
LOG STORAGE
WOODYARD
SLASHERS
MCC
SHORT WOOD FLUME
SUMP NO OUTLET
DIKE
FUEL STATION
EMERGENCY HOLDING PONDS
HEAVY EQUIP. GARAGE
AERATOR PONDS
LIME KILN
EQUIP WASH STATION (#2)
ACID SEWER
EFFLUENT DISPOSAL
WATER TREATMENT PLANT
CONTRACTOR PAINTING AREA

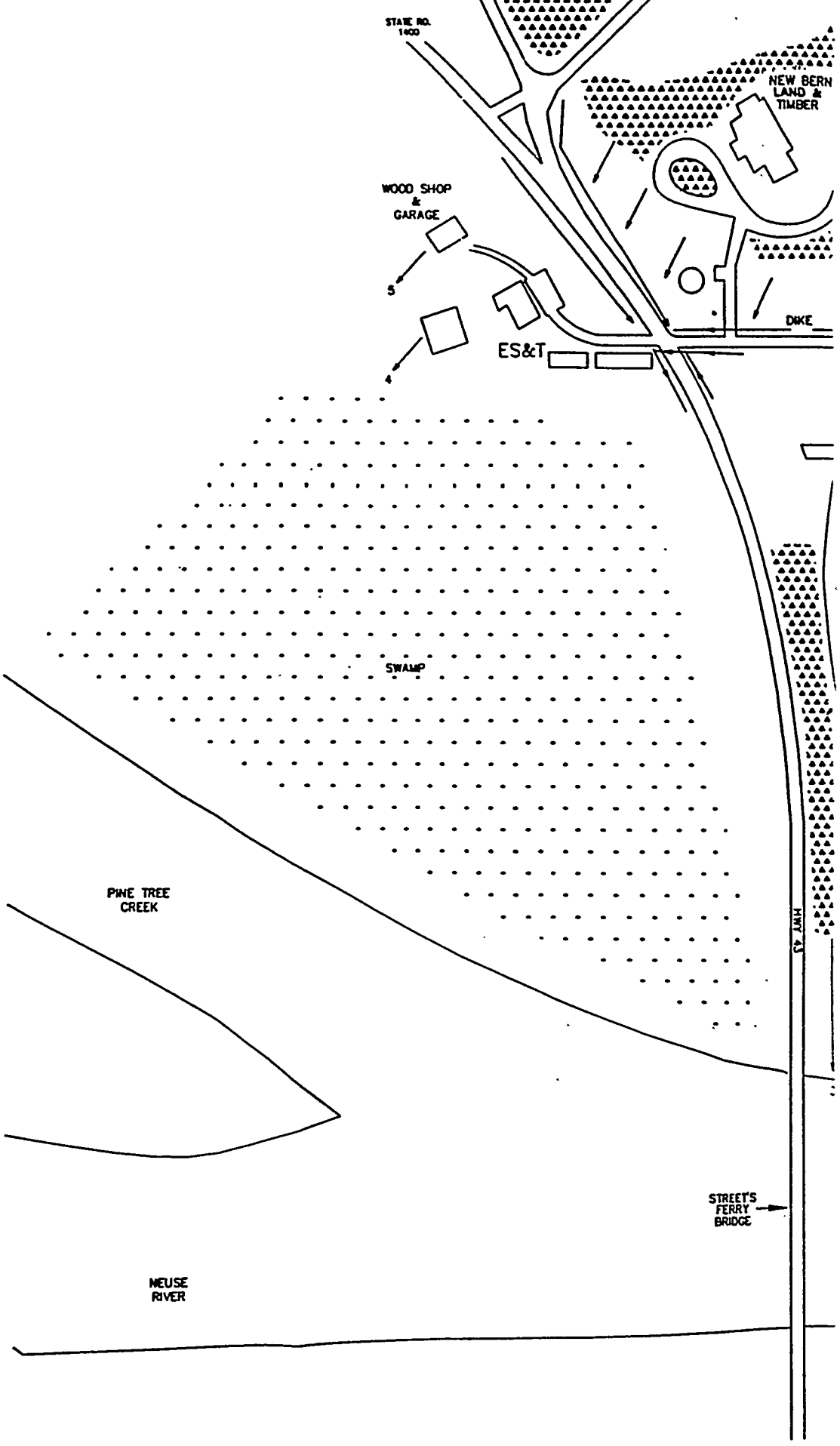
STATE RD. 1400
NEW BERN LAND & TIMBER
WOOD SHOP & GARAGE
5
DIKE
ES&T
4
SWAMP
PINE TREE CREEK
HWY 43
STREET'S FERRY BRIDGE
NEUSE RIVER

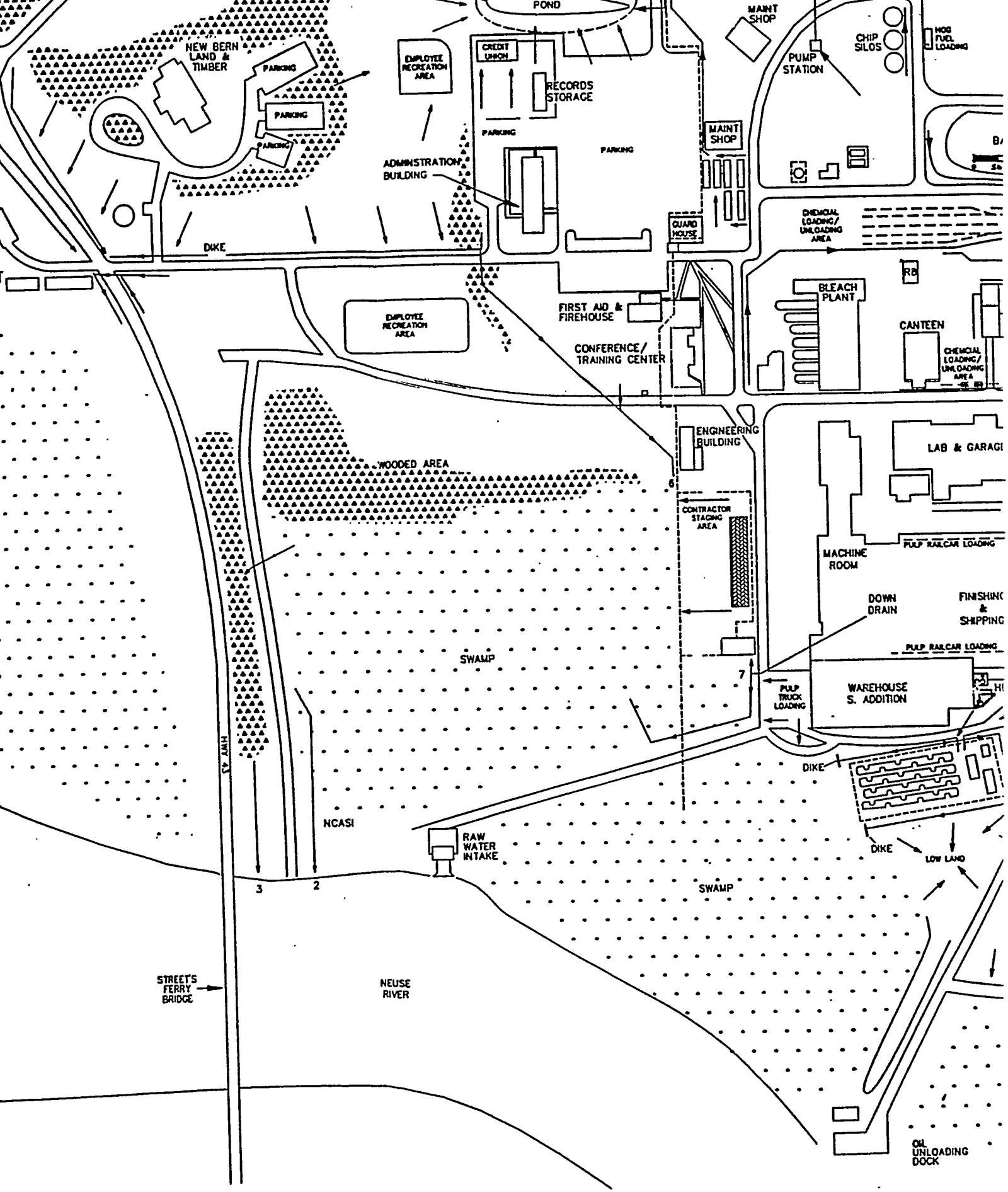

REFERENCE DWGS.	REV.	DATE	DESCRIPTION
	1	11/05/91	RELEASED PER. BRAD
	2	09/01/93	UPDATED

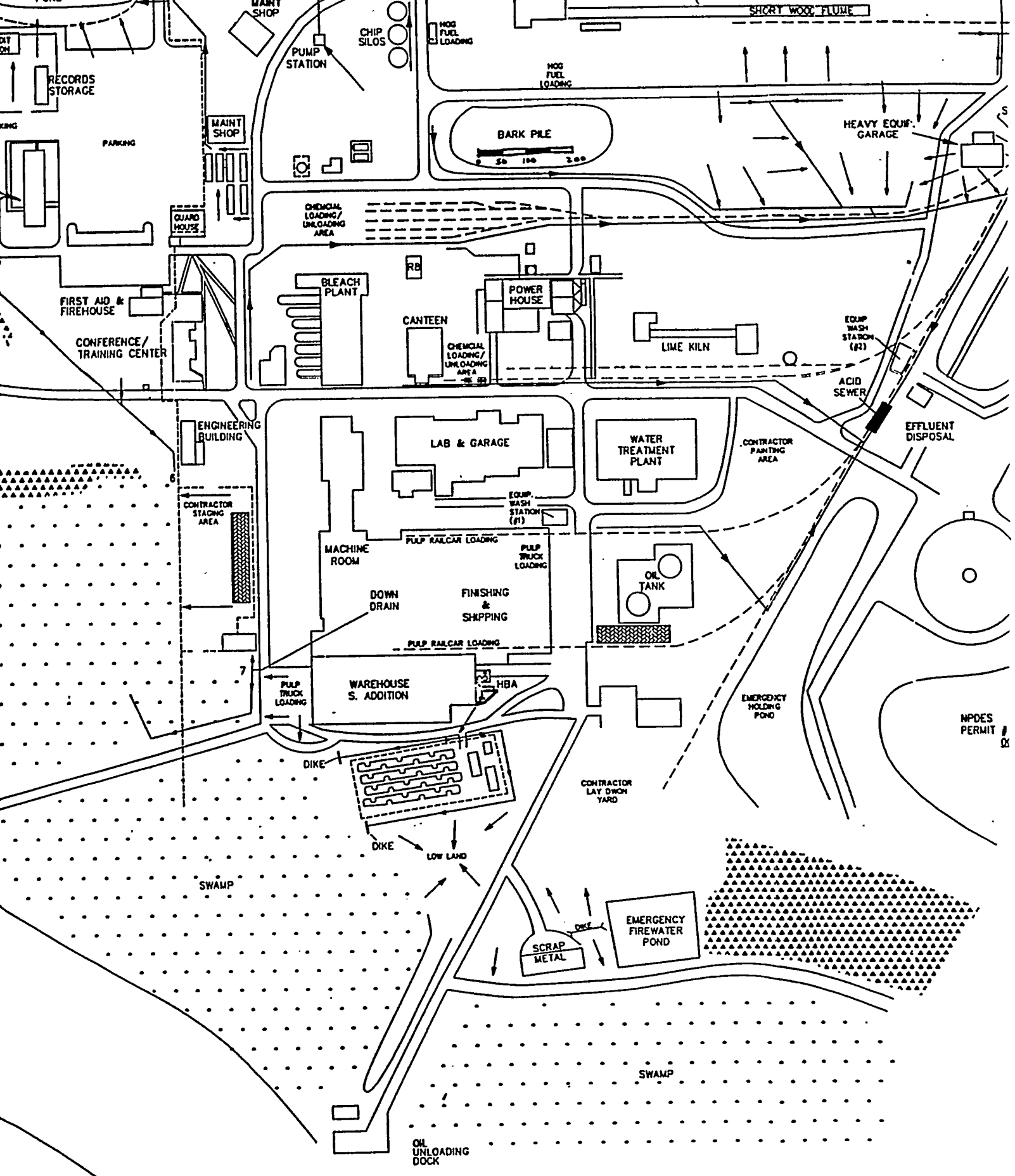

REFERENCE DWGS.	REV.	DATE	DESCRIPTION	BY	REV.	DATE	DESCRIPTION	BY
	1	11/05/91	RELEASED PER. BRAD CHESSON	WGW				
	2	09/01/93	UPDATED	WGW				

Weyerhae

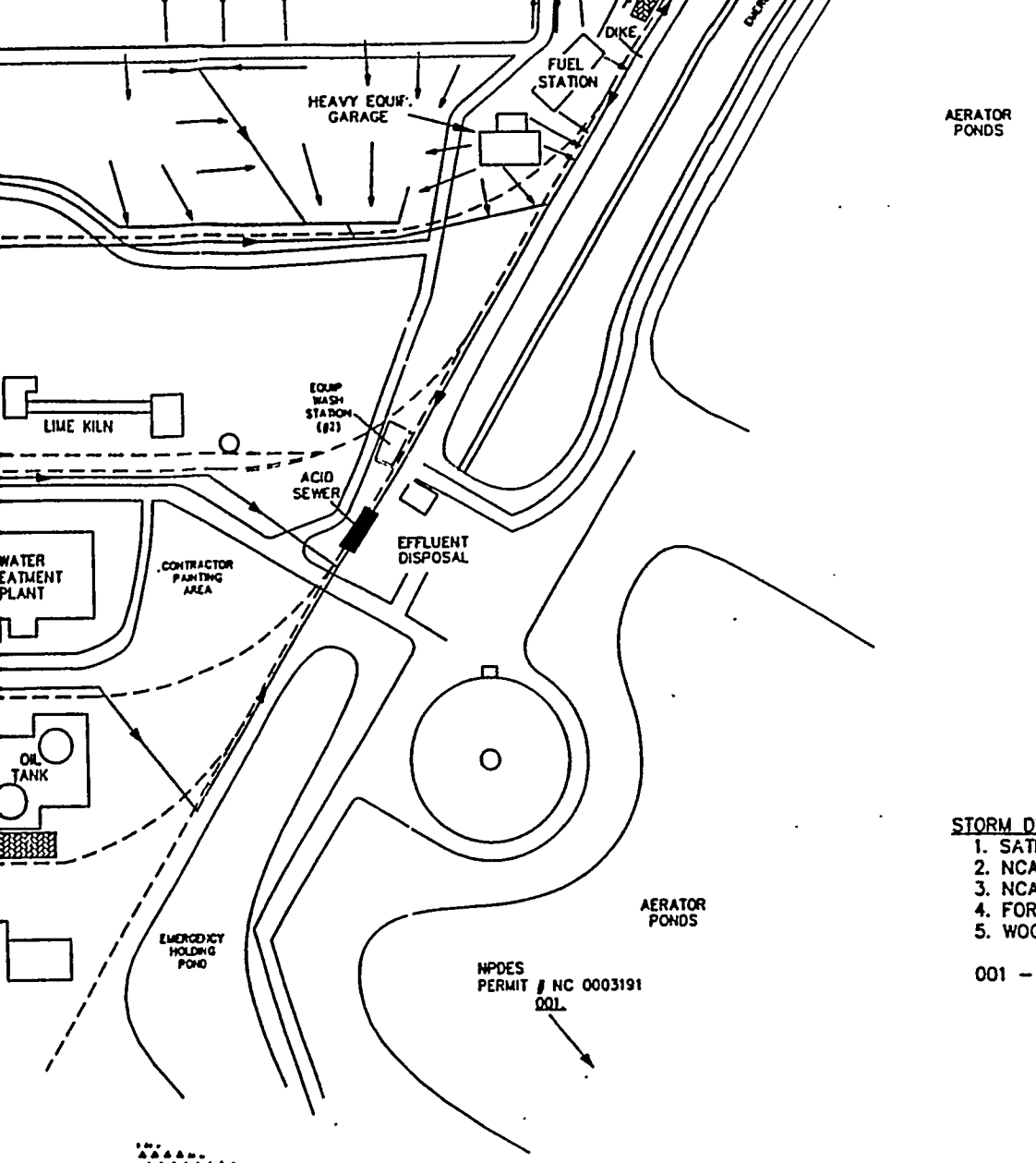

STORM DISCHARGE STATIONS
1. SATELLITE WOODYARD
2. NCASI EAST
3. NCASI WEST
4. FORESTRY RESEARCH
5. WOODSHOP & GARAGE

001 – LAGOON DISCHARGE
N.C. NPDES 0003191
DISCHARGE 001

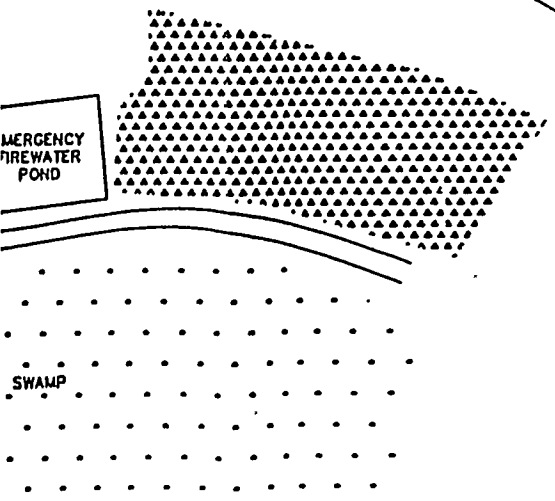

MILL PLOT PLAN

LEGEND
- RUN–OFF FLOWS
- DITCHES, PONDS, & RIVERS
- FENCE LINES
- RAILROAD TRACKS
- BUILDINGS & ROADS
- SWAMP AREAS
- WOODED AREAS
- SALVAGE YARDS

Figure 2-26
Mill Storm Water Collection System

/.	DATE	DESCRIPTION	BY

Weyerhaeuser Company
Pulp Division
New Bern, North Carolina

Weyerhaeuser

MILL STORM WATER COLLECTION SYSTEM

FILENAME: \090\09007--0

DRAWN BY: BILL WICKS
DATE: 11/05/91
SCALE: 1"=150' APROX.

DRAWING NO.
090-09-007

04996-EM-1A-2

SCALES
GATE HOUSE
MAINT SHOP
RECORDS STORAGE
PARKING
MAINT SHOP
GUARD HOUSE
SHOP
CHIP SILOS
HOG FUEL LOADING
COMPRESSORS
ASH SILOS
DOLOMITE SILO
GAS TURBINE GENERATOR
FIREWALL
MAIN STEPUP TRANSFORMER
AUXILIARY TRANSFORMER
GAS-IFIER
ELEC BLDG
BYPASS STA
CHEMICAL LOADING/ UNLOADING AREA
R8
BLEACH PLANT
FIRST AID & FIRE HOUSE
CONFERENCE/ TRAINING CENTER
CANTEEN
CHEMICAL LOADING/ UNLOADING AREA
ENGINEERING BUILDING
LAB & GARAGE
CONTRACTOR STAGING AREA
MACHINE ROOM
FINISHING

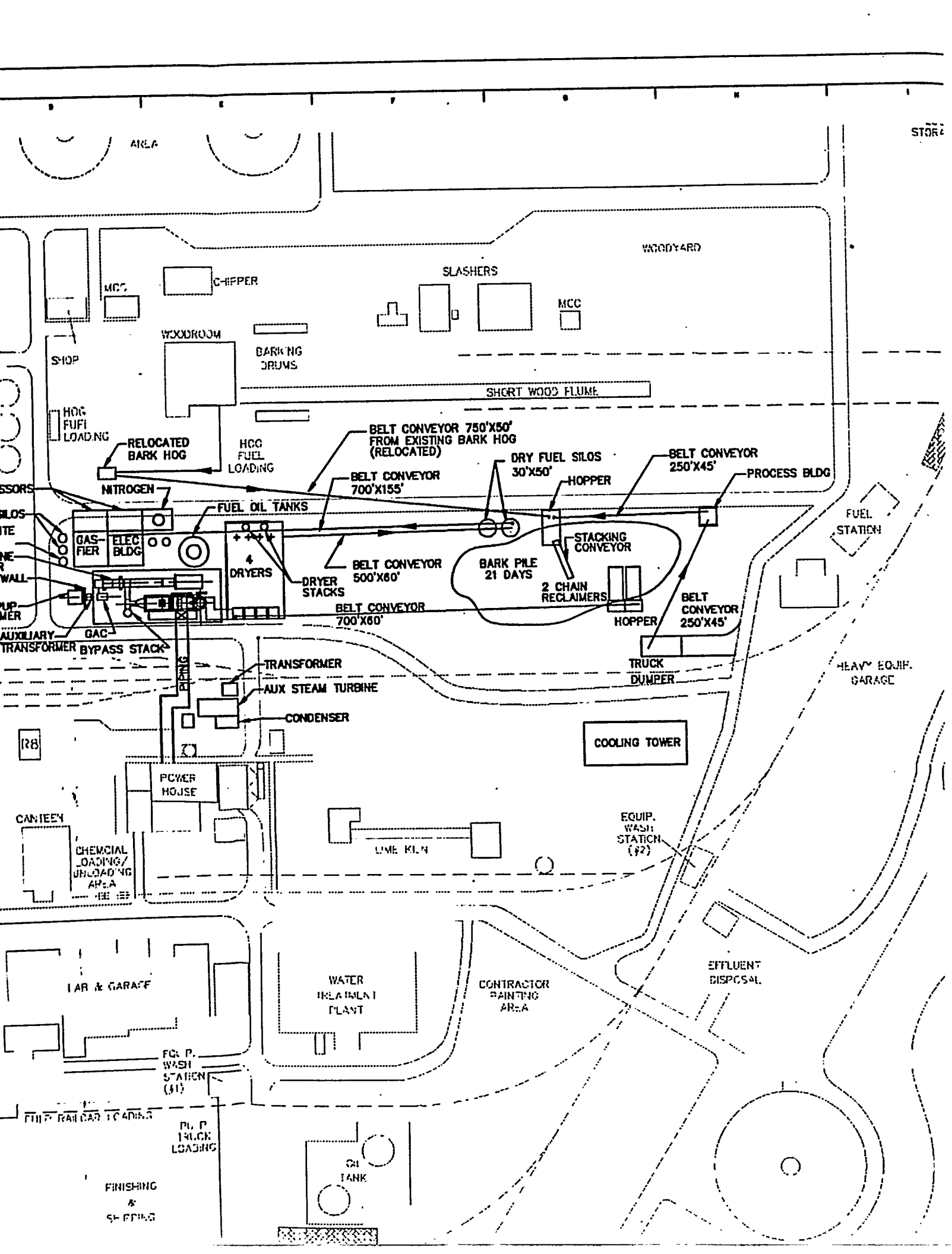
WOODYARD
SLASHERS
MCC
CHIPPER
MCC
WOODROOM
SHOP
BARKING DRUMS
SHORT WOOD FLUME
HOG FUEL LOADING
RELOCATED BARK HOG
HOG FUEL LOADING
BELT CONVEYOR 750'X50' FROM EXISTING BARK HOG (RELOCATED)
DRY FUEL SILOS 30'X50'
BELT CONVEYOR 250'X45'
PROCESS BLDG
HOPPER
BELT CONVEYOR 700'X155'
NITROGEN
FUEL OIL TANKS
GAS-IFIER
ELEC BLDG
4 DRYERS
DRYER STACKS
BELT CONVEYOR 500'X60'
BARK PILE 21 DAYS
STACKING CONVEYOR
2 CHAIN RECLAIMERS
FUEL STATION
BELT CONVEYOR 700'X60'
HOPPER
BELT CONVEYOR 250'X45'
AUXILIARY TRANSFORMER
GAC
BYPASS STACK
TRANSFORMER
AUX STEAM TURBINE
CONDENSER
TRUCK DUMPER
HEAVY EQUIP. GARAGE
COOLING TOWER
POWER HOUSE
CANTEEN
CHEMICAL LOADING/ UNLOADING AREA
LIME KILN
EQUIP. WASH STATION (#2)
LAB & GARAGE
WATER TREATMENT PLANT
CONTRACTOR PAINTING AREA
EFFLUENT DISPOSAL
FOR P. WASH STATION (#1)
PULP RAILCAR LOADING
PULP TRUCK LOADING
OIL TANK
FINISHING & SHIPPING

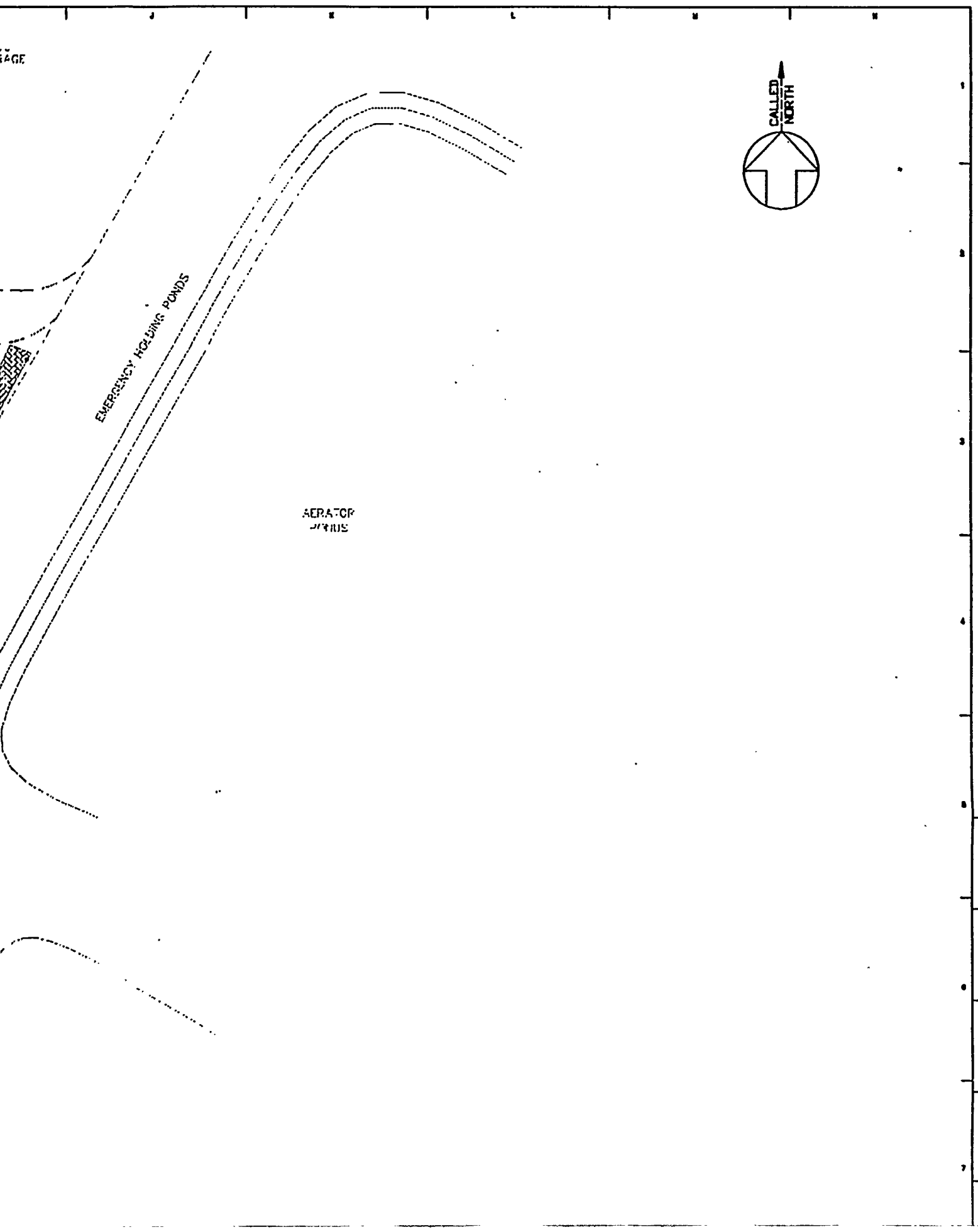
CALLED NORTH
EMERGENCY HOLDING PONDS
AERATOR

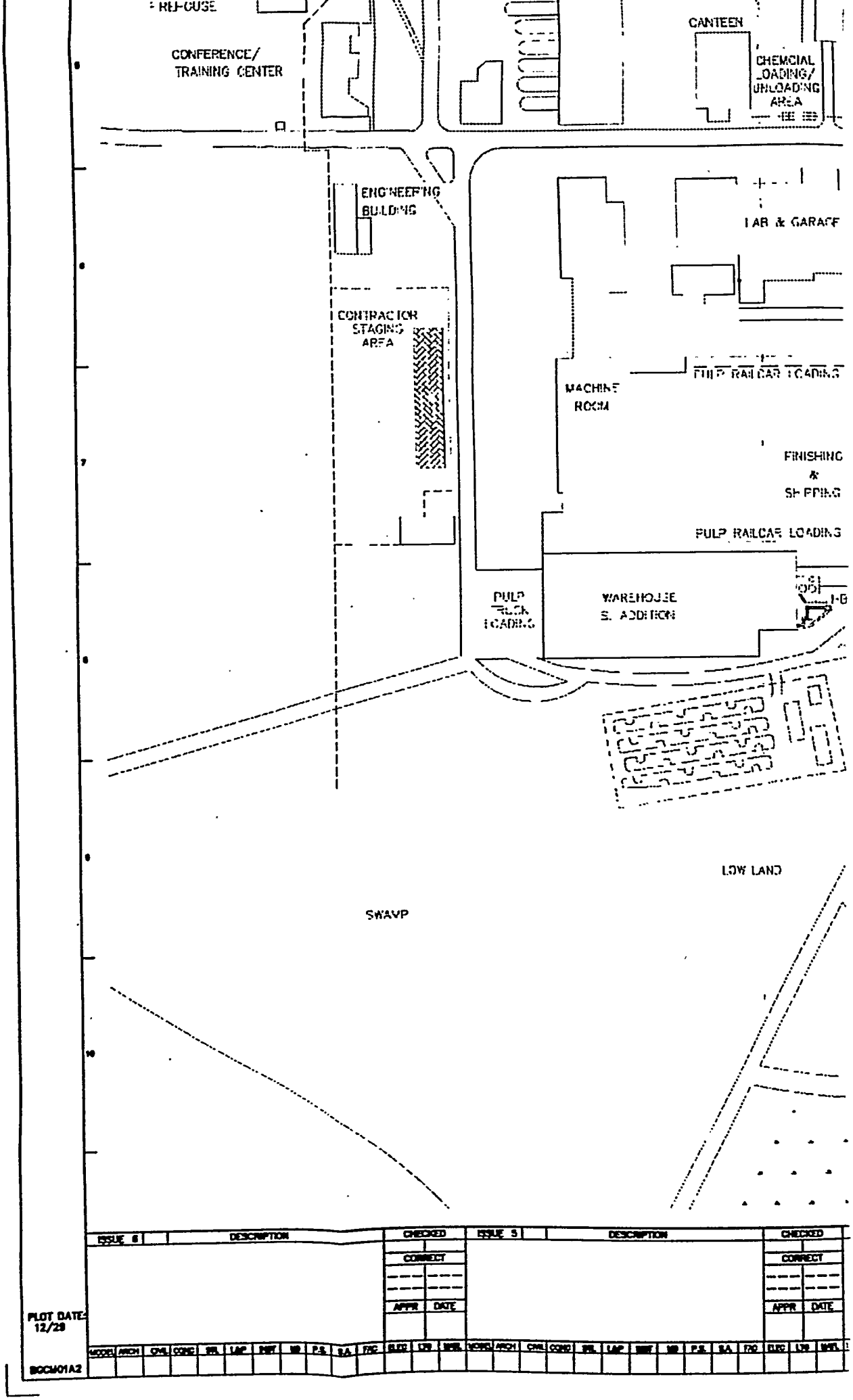

ISSUE	DESCRIPTION	CHECKED	ISSUE	DESCRIPTION	CHECKED
		CORRECT			CORRECT
		APPR DATE			APPR DATE

PLOT DATE=
12/28

BGCM01A2

C:\BGCN01A2 Wed Jan 25 16:27:26 1995

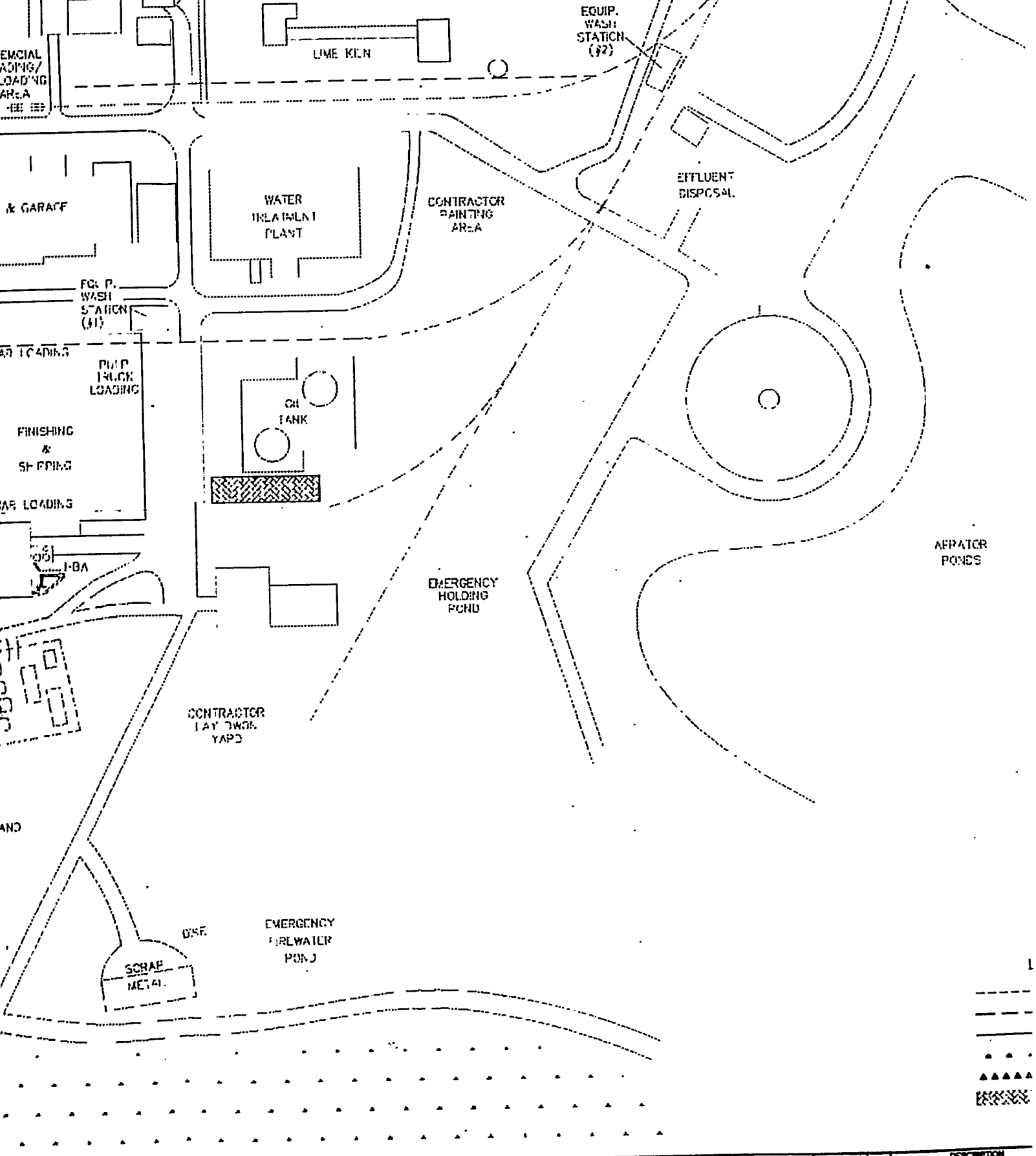

CHECKED	ISSUE 4	DESCRIPTION	CHECKED	ISSUE 3	DESCRIPTION	CHECKED	ISSUE 2	DESCRIPTION
CORRECT			CORRECT			CORRECT		ISSUED FOR REPORT
APPR DATE			APPR DATE			APPR DATE		

PRATOR
PONDS

THIS DRAWING CREATED ELECTRONICALLY

LEGEND

- FENCE LINES
- RAILROAD TRACKS
- BUILDINGS & ROADS
- SWAMP AREAS
- WOODED AREAS
- SALVAGE YARDS

0 100 200 300
GRAPHIC SCALE (FEET)

Figure 2-27
Weyerhaeuser Company
New Bern, North Carolina
BGCC Retrofit
Plot Plan

BOSTON, MASS.
DRAWING NUMBER 04996.00-EM-1A-2

DESCRIPTION	CHECKED	ISSUE 1	DESCRIPTION	CHECKED
	CORRECT	ORIGINAL ISSUE		CORRECT
	APPR DATE			APPR DATE

04996-EM-1B-1

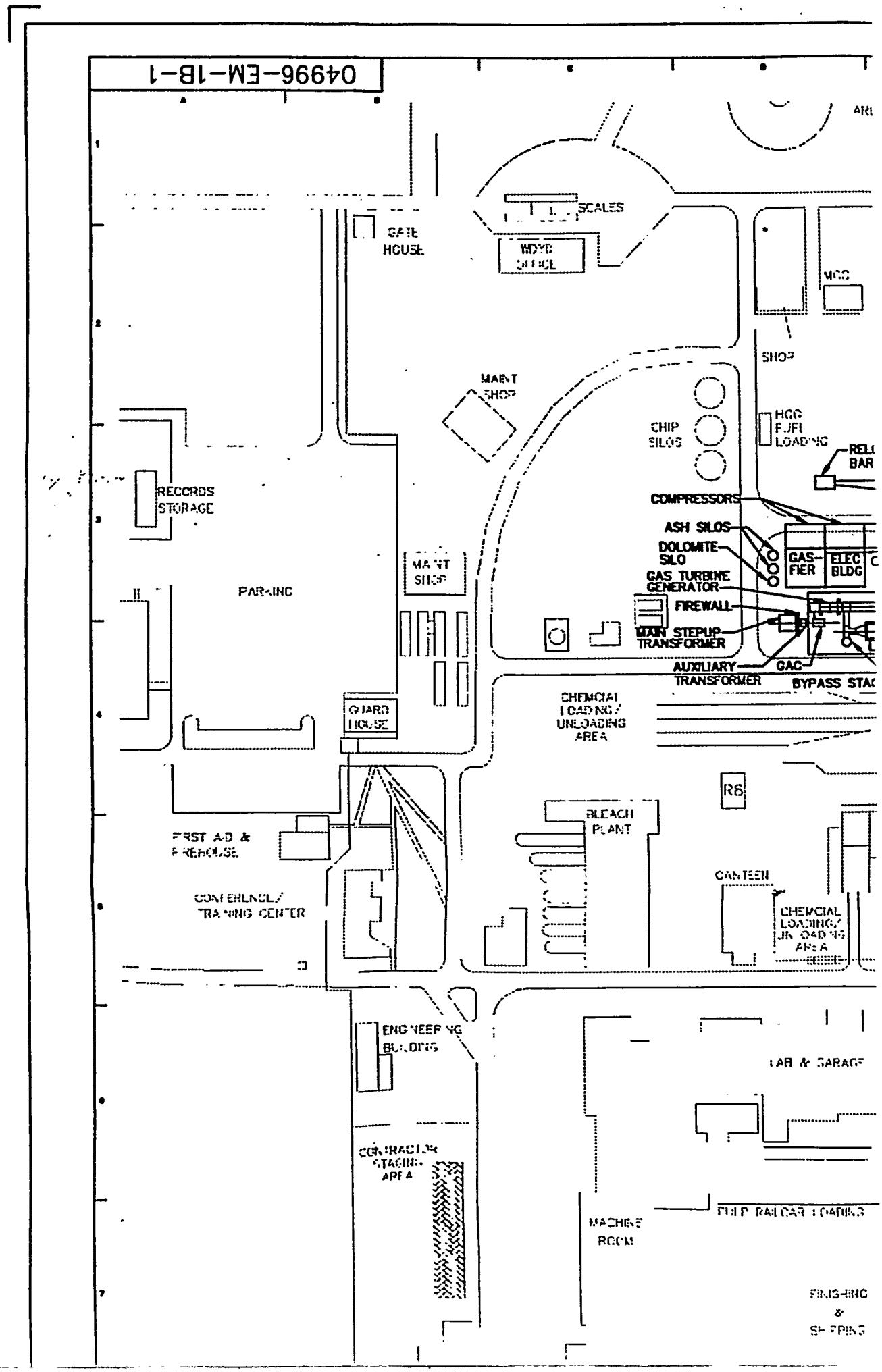
SCALES
GATE HOUSE
WDYD OFFICE
MCC
SHOP
MAINT SHOP
CHIP SILOS
HOG FUEL LOADING
RECORDS STORAGE
COMPRESSORS
ASH SILOS
DOLOMITE SILO
GAS-FIER
ELEC BLDG
GAS TURBINE GENERATOR
FIREWALL
MAIN STEPUP TRANSFORMER
AUXILIARY TRANSFORMER
GAC
BYPASS STAC
PARKING
MAINT SHOP
GUARD HOUSE
CHEMICAL LOADING/ UNLOADING AREA
R6
BLEACH PLANT
FIRST AID & FIREHOUSE
CONFERENCE/ TRAINING CENTER
CANTEEN
CHEMICAL LOADING/ UNLOADING AREA
ENGINEERING BUILDING
CONTRACTOR STAGING AREA
LAB & GARAGE
MACHINE ROOM
FINISHING & SHIPPING

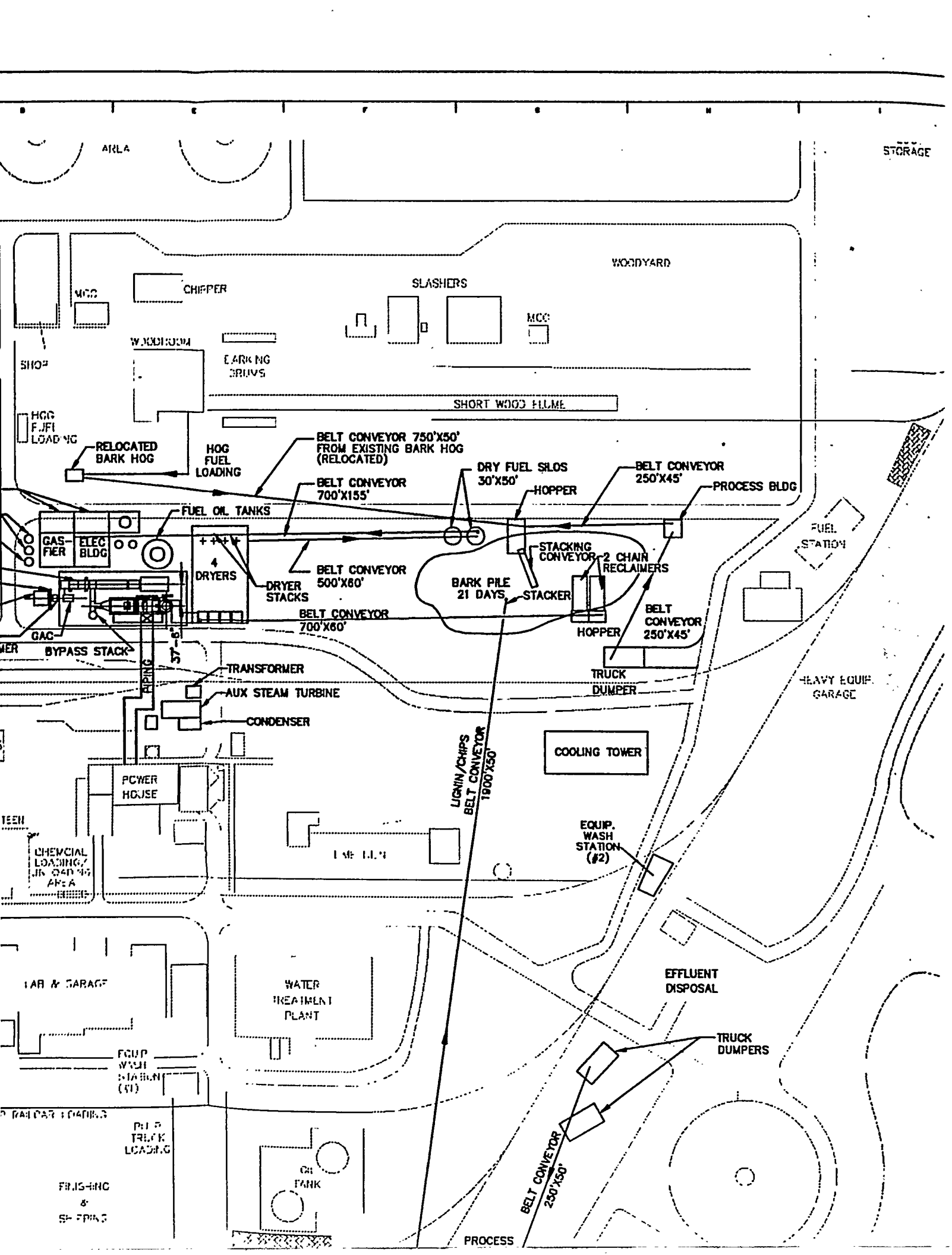
WOODYARD
CHIPPER
SLASHERS
MCC
SHOP
WOODROOM
BARKING DRUMS
SHORT WOOD FLUME
HOG FUEL LOADING
RELOCATED BARK HOG
HOG FUEL LOADING
BELT CONVEYOR 750'X50' FROM EXISTING BARK HOG (RELOCATED)
BELT CONVEYOR 700'X155'
DRY FUEL SILOS 30'X50'
HOPPER
BELT CONVEYOR 250'X45'
PROCESS BLDG
FUEL OIL TANKS
GAS-FIER
ELEC BLDG
4 DRYERS
DRYER STACKS
BELT CONVEYOR 500'X60'
STACKING CONVEYOR
2 CHAIN RECLAIMERS
BARK PILE 21 DAYS
STACKER
BELT CONVEYOR 700'X60'
HOPPER
BELT CONVEYOR 250'X45'
GAC
BYPASS STACK
37'-6"
TRANSFORMER
AUX STEAM TURBINE
CONDENSER
TRUCK DUMPER
FUEL STATION
HEAVY EQUIP. GARAGE
COOLING TOWER
LIGNIN/CHIPS BELT CONVEYOR 1900'X50'
POWER HOUSE
CHEMICAL LOADING/UNLOADING AREA
EQUIP. WASH STATION (#2)
LAB & GARAGE
WATER TREATMENT PLANT
EFFLUENT DISPOSAL
TRUCK DUMPERS
EQUIP WASH STATION (#1)
RAILCAR LOADING
PULP TRUCK LOADING
OIL TANK
FINISHING & SHIPPING
BELT CONVEYOR 250'X50'
PROCESS

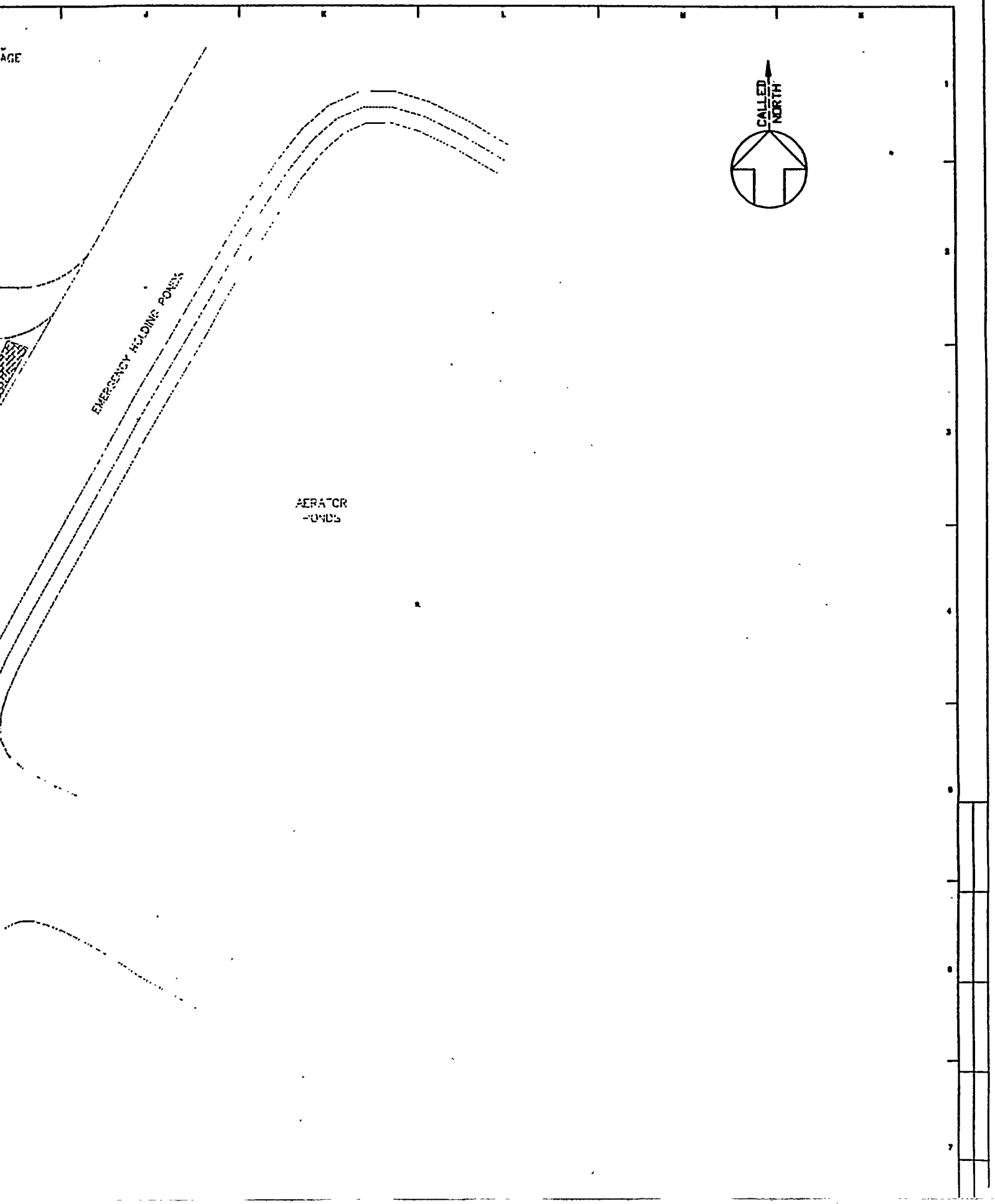
AGE
EMERGENCY HOLDING POND
AERATOR
PONDS
CALLED
NORTH

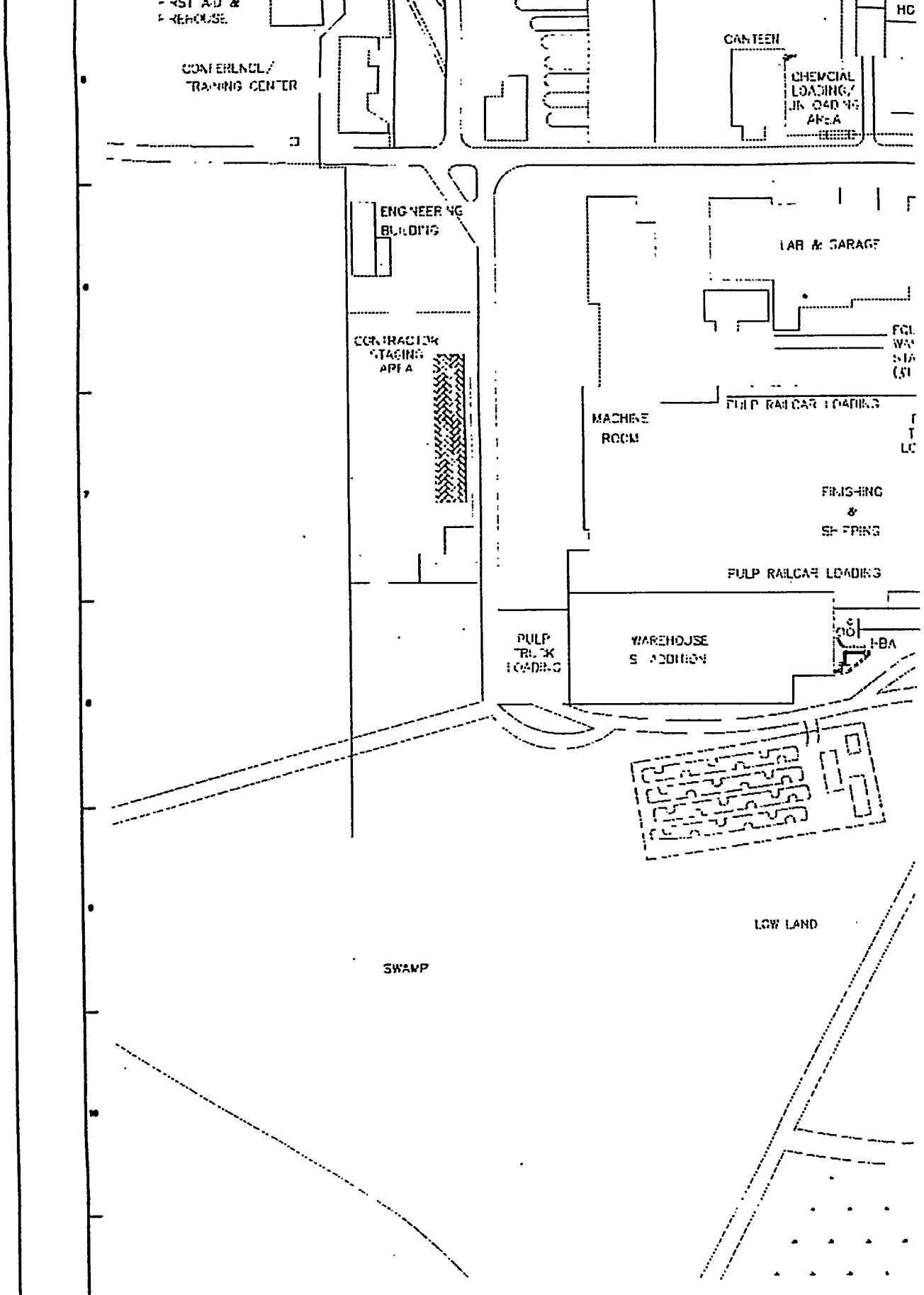

C:\BGCN0181 Wed Jan 25 16:29:11 1995

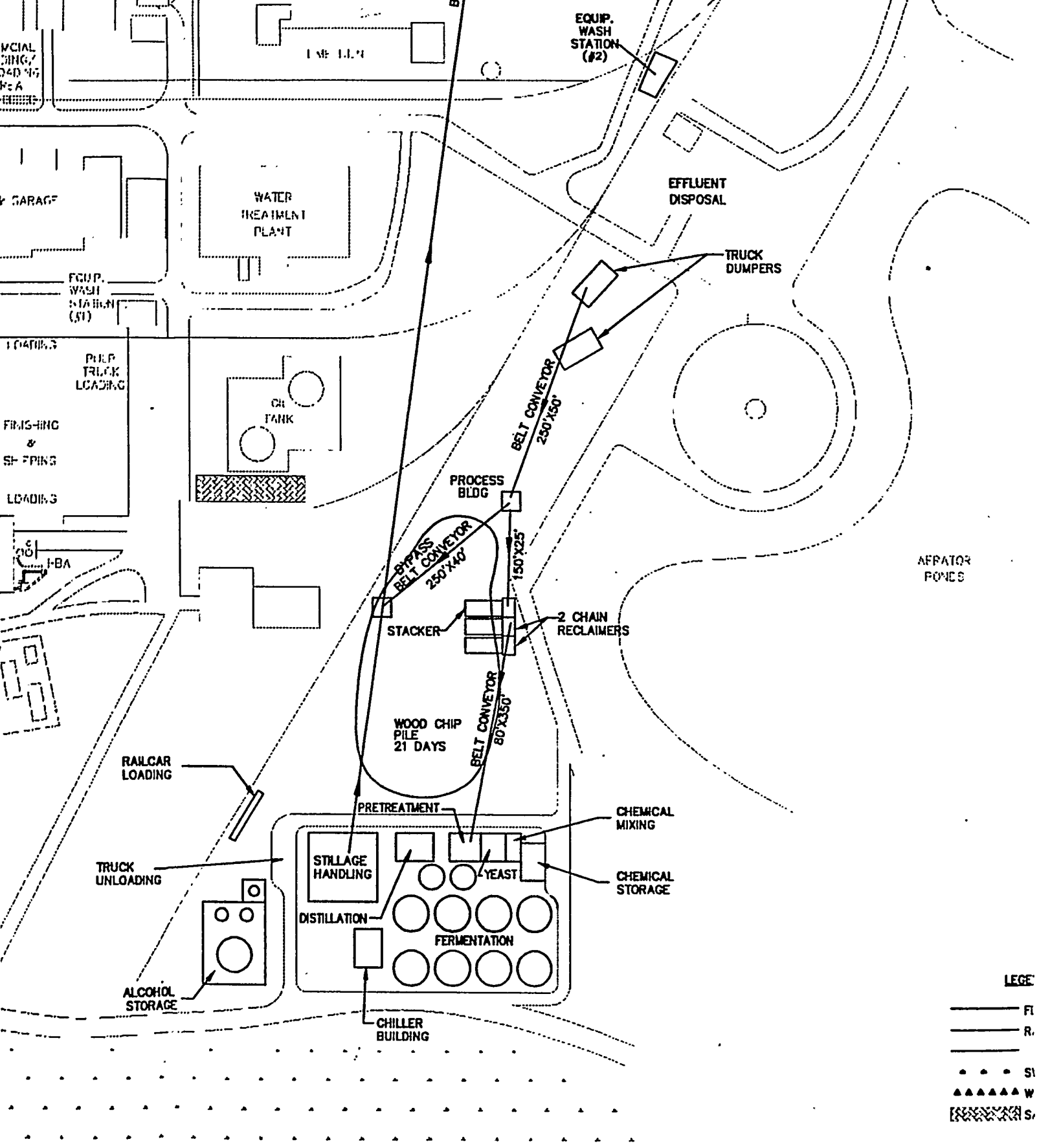

CHECKED	ISSUE 4	DESCRIPTION	CHECKED	ISSUE 3	DESCRIPTION	CHECKED	ISSUE 2	DESCRIPTION
CORRECT			CORRECT			CORRECT		
APPR DATE			APPR DATE			APPR DATE		

THIS DRAWING CREATED ELECTRONICALLY

Figure 2-28
Weyerhaeuser Company
New Bern, North Carolina
BGCC/Ethanol Retrofit
Plot Plan

DRAWING NUMBER 04996.00-EM-1B-1

DESCRIPTION	CHECKED	ISSUE 1	DESCRIPTION	CHECKED
	CORRECT	ORIGINAL ISSUE		CORRECT
	APPR DATE			APPR DATE

DESIGNED BY DRAWN BY
DSGN CHK'D BY CHK'D BY
AREAS LEVELS WORK PKG

2.6 Plant Performance

2.6.1 BGCC Cogen Plants

Since the steam needs of the mill are fixed in all cases, the BGCC plant performance is measured by the biomass fuel consumption, the gross power generation and the auxiliary or internal power consumption. These values define the plant net output and its efficiency. The efficiency of a power plant is usually expressed in terms of net heat rate which is the fuel heat input in Btu/hr divided by the net output in kilowatts. For cogeneration plants, this calculation results in a high and misleading value because it does not take into consideration the steam produced for process use.

One approach for developing a meaningful efficiency for cogeneration plants is to determine that portion of the fuel heat input chargeable to electric generation. This allows the calculation of a fuel chargeable to power (FCP) heat rate. The thermal credit for process steam production is calculated by assuming the steam is generated in a separate natural gas or oil fired boiler with a typical efficiency (e.g., 87.5 percent). From the quality and quantity of the steam and the boiler efficiency, the fuel heat input in Btu/hr required to produce the steam is calculated and subtracted from the total heat input to the cogen plant to determine the fuel heat input used to generate the electric power. This FCP heat rate calculation is used to compare the various BGCC alternatives.

For the BGCC cogen plant at the New Bern Mill, the fuel heat input which would be required to produce the steam sent to the mill is as follows:

Fuel Heat Input for Steam Production, 10^6 Btu/hr	Process Steam
202.5	156,000 lb/hr (825°F, 850 psig)
47.4	45,000 lb/hr (155 psig, sat'd)

The total fuel heat input attributable to steam production is 249.9 x 10^6 Btu/hr. Therefore, for each of the BGCC design cases, the FCP heat rate is calculated as follows:

$$\frac{\text{Biomass Feed Heat Input, Btu/hr} - 249.9 \times 10^6 \text{ Btu/hr}}{\text{net kilowatt output}}$$

Figures 2-29 through 2-32 present summary energy and material balances and performance calculations for the BGCC cases. Figure 2-29 is the TPS gasification-based design presented in Section 2.1. Figure 2-30 presents a modified TPS design (no air extraction) suggested for study by Dr. Erich Larson of Princeton University. The modified design is based on performance information provided by General Electric for throttling the gas turbine compressor using the inlet guide vanes to prevent surge due to the large low Btu fuel gas volumetric flow instead of extracting air from the compressor discharge. For atmospheric gasifiers, extracting high pressure air from the gas turbine compressor to prevent surge and using it to satisfy the low pressure air requirements of the gasifier is a severe energy penalty. To minimize this penalty, instead of throttling to the pressure required by the gasifier, an expander was provided in the TPS BGCC design to generate some additional electricity (refer to Section 2.1 for a description of the expander-compressor-generator). The modified TPS design answers the question of whether throttling the gas turbine compressor to prevent surge is less of an energy penalty than air extraction.

As indicated in Figures 2-29 and 2-30, the heat rate of the air extraction case at 10,885 Btu/kWh is slightly lower than the heat rate of the no air extraction case (11,000 Btu/kWh). However, the expander-compressor-generator cost for the air extraction case may be too high to justify a 115 Btu/kWh improvement in heat rate. TPS has developed a cost-effective air integration design for a smaller gas turbine which should be adaptable to the Frame 6B. The integration issue should be resolved in a design optimization study.

Figures 2-31 and 2-32 depict the pressurized Tampella Gasification-based BGCC plants with a flue gas biomass dryer and with a biomass dryer using steam. The flue gas biomass dryer design, although slightly higher in capital cost (refer to Section 2.7-1), has a better heat rate of 10,764 Btu/kWh versus 12,319 Btu/kWh for the steam dryer case. This difference is due to the fact that to provide the steam for the dryer the HRSG must be supplementary fired with biogass. With the steam dryer case, the steam evaporated from the biomass may be used in a planned mill steam stripper. This steam would reduce the mill steam requirements and should improve the steam dryer case heat rate.

Comparing the TPS case using flue gas to dry the biomass shown in Figure 2-29 and the Tampella Flue Gas Dryer Case shown in Figure 2-30 indicates the pressurized gasifier has a slightly better heat rate than the atmospheric gasifier. However, considering the level of accuracy of the preliminary design, it is only fair to conclude that the heat rates for the Frame 6B size BGCC plant are about the same.

The BGCC heat rate compares favorably with:

- a conventional biomass-fueled fluid bed boiler system of similar capacity ~ 14,000 Btu/kWh
- a new coal-fired power plant 300 MW in size ~ 10,500 - 11,000
- typical utility system overall heat rates

Tables 2-17 through 2-20 are the electrical (motor) load lists for the four BGCC cases which were used to calculate the auxiliary power consumption.

The performance of the four BGCC cases can be summarized as follow:

Case	Biomass Consumption lb/hr (wet)	Biomass Consumption Tons/Yr (Dry)	Net Output, kW	Power Sales, kW	FCP Heat Rate, Btu/kWh
TPS (Flue Gas Dryer)	140,400	261,355	33,800	28,200	10,885
TPS (No Air Extraction)	146,800	273,268	36,000	30,400	11,000
Tampella (Flue Gas Dryer)	152,200	283,320	39,000	33,400	10,764
Tampella (Steam Dryer)	165,700	308,450	38,900	33,300	12,319

The biomass consumption is based on an 85 percent capacity factor for the BGCC plant.

2.6.2 Ethanol Cases

The ethanol plant can be located at the New Bern Mill with or without a BGCC plant. For the case without a BGCC plant, Figure 2-33 shows the overall ethanol plant material balance and interfaces with the mill. The mill provides process water, boiler feedwater and cooling water to the ethanol plant and treats the wastewater stream. The ethanol plant must be provided with a packaged boiler to satisfy its steam needs. To reduce the requirement for outside (trucked in) biomass, the "stand alone" ethanol plant would use some of the mill residuals which are of sufficient quality.

This "stand alone" ethanol plant, converts 19,466 lb/hr (9,733 lb/hr dry basis) of waste biomass from the mill plus 154,134 lb/hr (77,067 lb/hr dry basis) of new biomass (chipped thinnings from forest management) to 21,700 lb/hr (3,292 gal/hr) of anhydrous fuel grade ethanol. The plant also produces 51,126 lb/hr (28,119 lb/hr dry) of a lignin by-product which can be used as fuel in the mill or sold as fuel.

The ethanol plant is capable of a 94 percent annual onstream factor. This translates to a biomass consumption of 357,373 tons/yr of bone dry (or BDT/yr) biomass which is converted to 89,343 tons/yr of ethanol. This is a conversion efficiency of 25 percent.

The ethanol energy requirements are 13.2 MW of electricity and 114×10^6 Btu/hr of fuel oil used to produce the ethanol plant steam requirements in a packaged boiler.

The most significant ethanol plant chemical usage is the enzyme which is used in fermentation. The impact of the enzyme cost on the ethanol plant economics is discussed in Section 4.

Figure 2-34 shows the ethanol plant integrated with a Tampella-based BGCC plant design with a flue gas biomass dryer. The integration with the BGCC plant is very simple. The BGCC plant provides steam to the ethanol plant (in addition to supplying steam to the mill previously supplied by the bark boiler) and the ethanol plant lignin by-product is used to offset a portion of the new (outside) biomass used to fuel the BGCC plant. The BGCC plant also provides electricity to the mill and to the ethanol plant and provides 19.4 MWe of export power to the grid.

The motor load list for the ethanol and BGCC plants is given in Table 2-21.

Table 2-17: Electrical Summary - TPS BGCC (Flue Gas Dryer)

DETAILED ELECTRICAL SUMMARY			ISSUE 1		J.O. NO. 04996.00	
					SHEET 1 0F 1	
SERVICE TPS BGCC (Flue Gas Dryer)			BY DLS	CHECKED PDW	DATE 03/31/95	
ITEM NO.	SERVICE	NOTES	BHP	POWER KW		REV.
	GASIFIER ISLAND			320.0		
G- 201	COMBUSTION TURBINE AUXILIARIES			143.0		
G- 202	EXPANDER/COMPRESSOR AUXILIARIES			50.0		
G- 203	STEAM TURBINE AUXILIARIES		110.0	86.3		
G- 264 A,B	INCREMENTAL COOLING TOWER & PUMPING	2	30.2	23.7		
G- 276 A	GAS TURBINE FUEL OIL PUMP	1	10.0	7.8		
G- 278 A	LOCAL BOILER WATER TREATMENT		1.0	0.8		
P- 201A	BLOW-OFF TRANSFER PUMP		1.0	0.8		
P- 202A/B	CONDENSATE PUMP			10.0		
P- 253	FLARE PROCESS CONDENSATE PUMP	1	5.0	3.9		
P- 254 A	FUEL OIL SUPPLY PUMP	1	10.0	7.8		
R- 201	FUEL GAS BOOSTER COMPRESSOR			12,530.0		
R- 251 A,B	SERVICE & INSTRUMENT AIR COMPRESSOR (60%)		100.0	78.5		
T- 201 A-D	BIOMASS DRYER (FLUE GAS)		2,250.0	1,766.1		
W- 252A/B	TRUCK DUMPER W/ LIVE BOTTOM RECEIVING HOPPER		130.0	102.0		
W- 253	PROCESS BUILDING FEED CONVEYOR		30.0	23.5		
W- 254	REVERSING CONVEYOR WITH MAGNETIC METAL DETECTOR		20.0	15.7		
W- 255	DISK SCREEN		15.0	11.8		
W- 256	WET FUEL HOG		300.0	235.5		
W- 257	WETFUEL STORAGE PILE FEED CONVEYOR		30.0	23.5		
W- 258	WETFUEL STORAGE PILE FEEDER FROM EXISTING HOGGING STATION		25.0	19.6		
W- 260	WETFUEL STACKING CONVEYOR		30.0	23.5		
W- 261A/B	WETFUEL CHAIN RECLAIMER		100.0	78.5		
W- 262	BIOMASS DRYER FEED CHAIN DISTRIBUTION CONVEYOR		50.0	39.2		
W- 264	BIOMASS DRYER FEED CONVEYOR		40.0	31.4		
W- 266A,B,C,D	DRYER FEED SCREW CONVEYOR		60.0	47.1		
W- 267A,B,C,D	DRYER DISCHARGE SCREW CONVEYOR		60.0	47.1		
W- 268	DRY FUEL SILO FEED CONVEYOR		15.0	11.8		
W- 269A,B	DRY FUEL SILO WITH LIVE BOTTOM RECLAIM		115.0	90.3		
W- 270	BIOMASS FEED BELT CONVEYOR		25.0	19.6		
W- 272	BIOMASS FEED REVERSING BELT CONVEYOR		15.0	11.8		
W- 274	DOLOMITE STORAGE SILO WITH LIVE BOTTOM		1.0	0.8		
W- 275	DOLOMITE FEED PNEUMATIC CONVEYOR SYSTEM		40.0	31.4		
W- 276	BOTTOM ASH PNEUMATIC CONVEYOR SYSTEM		40.0	31.4		
W- 277	BOTTOM ASH SILO WITH DISCHARGE SCREW		1.0	0.8		
W- 278	FILTER ASH PNEUMATIC CONVEYOR SYSTEM		45.0	35.3		
W- 279	FILTER ASH SILO WITH DISCHARGE SCREW		1.0	0.8		
N/A	LIGHTING AND MISC. BUILDING LOADS			50.0		
	TOTAL CONNECTED POWER LOAD REQUIREMENTS			15,991.8		
	TOTAL ONLINE POWER CONSUMPTION (83% CONNECT)			13,273.2		

NOTES

1) INTERMITTENT SERVICE, NOT INCLUDED IN TOTAL

2) COOLING SYSTEM AND CONDENSATE SYSTEM INCLUDES ADDITIONAL LOAD FOR 2.9 MW CONDENSING STEAM TURBINE

Table 2-18: Electrical Summary - TPS BGCC (No Extraction Air Case)

DETAILED ELECTRICAL SUMMARY		ISSUE 1			J.O. NO. 04996.00	
					SHEET 1 0F 1	
SERVICE TPS BGCC (No Extraction Air Case)			BY DLS	CHECKED PDW	DATE 03/31/95	
ITEM NO.	SERVICE	NOTES	BHP	POWER KW		REV.
	GASIFIER ISLAND			330.0		
G- 201	COMBUSTION TURBINE AUXILIARIES			143.0		
G- 203	STEAM TURBINE AUXILIARIES		145.0	113.8		
G- 264 A,B	INCREMENTAL COOLING TOWER & PUMPING	2	46.0	36.1		
G- 276 A	GAS TURBINE FUEL OIL PUMP	1	10.0	7.8		
G- 278 A	LOCAL BOILER WATER TREATMENT		1.0	0.8		
P- 201A	BLOW-OFF TRANSFER PUMP		1.0	0.8		
P- 202A/B	CONDENSATE PUMP			13.2		
P- 253	FLARE PROCESS CONDENSATE PUMP	1	5.0	3.9		
P- 254 A	FUEL OIL SUPPLY PUMP	1	10.0	7.8		
R- 201	FUEL GAS BOOSTER COMPRESSOR			13,085.0		
R- 202	GASIFICATION AIR FEED COMPRESSOR			2,000.0		
R- 251 A,B	SERVICE & INSTRUMENT AIR COMPRESSOR (60%)		100.0	78.5		
T- 201 A-D	BIOMASS DRYER (FLUE GAS)		2,350.0	1,844.6		
W- 252A/B	TRUCK DUMPER W/ LIVE BOTTOM RECEIVING HOPPER		130.0	102.0		
W- 253	PROCESS BUILDING FEED CONVEYOR		30.0	23.5		
W- 254	REVERSING CONVEYOR WITH MAGNETIC METAL DETECTOR		20.0	15.7		
W- 255	DISK SCREEN		15.0	11.8		
W- 256	WET FUEL HOG		300.0	235.5		
W- 257	WETFUEL STORAGE PILE FEED CONVEYOR		30.0	23.5		
W- 258	WETFUEL STORAGE PILE FEEDER FROM EXISTING HOGGING STATION		25.0	19.6		
W- 260	WETFUEL STACKING CONVEYOR		30.0	23.5		
W- 261A/B	WETFUEL CHAIN RECLAIMER		100.0	78.5		
W- 262	BIOMASS DRYER FEED CHAIN DISTRIBUTION CONVEYOR		50.0	39.2		
W- 264	BIOMASS DRYER FEED CONVEYOR		40.0	31.4		
W- 266A,B,C,D	DRYER FEED SCREW CONVEYOR		60.0	47.1		
W- 267A,B,C,D	DRYER DISCHARGE SCREW CONVEYOR		60.0	47.1		
W- 268	DRY FUEL SILO FEED CONVEYOR		15.0	11.8		
W- 269A,B	DRY FUEL SILO WITH LIVE BOTTOM RECLAIM		115.0	90.3		
W- 270	BIOMASS FEED BELT CONVEYOR		25.0	19.6		
W- 272	BIOMASS FEED REVERSING BELT CONVEYOR		15.0	11.8		
W- 274	DOLOMITE STORAGE SILO WITH LIVE BOTTOM		1.0	0.8		
W- 275	DOLOMITE FEED PNEUMATIC CONVEYOR SYSTEM		40.0	31.4		
W- 276	BOTTOM ASH PNEUMATIC CONVEYOR SYSTEM		40.0	31.4		
W- 277	BOTTOM ASH SILO WITH DISCHARGE SCREW		1.0	0.8		
W- 278	FILTER ASH PNEUMATIC CONVEYOR SYSTEM		45.0	35.3		
W- 279	FILTER ASH SILO WITH DISCHARGE SCREW		1.0	0.8		
N/A	LIGHTING AND MISC. BUILDING LOADS			50.0		
	TOTAL CONNECTED POWER LOAD REQUIREMENTS			18,628.3		
	TOTAL ONLINE POWER CONSUMPTION (83% CONNECT)			15,461.5		

NOTES

1) INTERMITTENT SERVICE, NOT INCLUDED IN TOTAL

2) COOLING SYSTEM AND CONDENSATE SYSTEM INCLUDES ADDITIONAL LOAD FOR 3.8 MW CONDENSING STEAM TURBINE

Table 2-19: Electrical Summary - Tampella BGCC (Flue Gas Dryer)

DETAILED ELECTRICAL SUMMARY			ISSUE 1			J.O. NO. 04996.00	
						SHEET 1 0F 1	
SERVICE TAMPELLA BGCC (FLUE GAS DRYER)				BY PDW	CHECKED DLS	DATE 03/31/95	
ITEM NO.		SERVICE	NOTE	BHP	POWER KW	EMERG. POWER	REV.
		GASIFIER ISLAND			130.0		
G-	301	COMBUSTION TURBINE AUXILIARIES			143.0		
G-	364	INCREMENTAL COOLING TOWER & PUMPING	2		6.7		
G-	376	GAS TURBINE FUEL OIL PUMP	1	10.0	7.8		
G-	378	LOCAL BOILER WATER TREATMENT		1.0	0.8		
P-	303A/B	BLOWOFF TRANSFER PUMP		1.0	0.8		
P-	353	FLARE PROCESS CONDENSATE PUMP	1	5.0	3.9		
P-	354	FUEL OIL SUPPLY PUMP	1	10.0	7.8		
R-	301	AIR BOOSTER COMPRESSOR			1,400.0		
R-	351A	SERVICE & INSTRUMENT AIR COMPRESSOR (60%)		100.0	78.5		
T-	301A-D	BIOMASS DRYER SYSTEM		2,360.0	1,852.5		
W-	352 A/B	TRUCK DUMPER W/ LIVE BOTTOM RECEIVING HOPPER		130.0	102.0		
W-	353	PROCESS BUILDING FEED CONV.		30.0	23.5		
W-	354	REVERSING CONVEYOR WITH MAG METAL DETECTOR		20.0	15.7		
W-	355	DISC SCREEN		15.0	11.8		
W-	356	WET FUEL HOG		300.0	235.5		
W-	357	WET FUEL STORAGE PILE FEED CONVEYOR		30.0	23.5		
W-	358	WET FUEL STORAGE PILE FEEDER FROM EXISTING HOG		25.0	19.6		
W-	360	WET FUEL STACKING CONVEYER		30.0	23.5		
W-	361A/B	WET FUEL CHAIN RECLAIMER		100.0	78.5		
W-	362	BIOMASS FEED CHAIN DISTRIBUTION CONVEYOR		50.0	39.2		
W-	364	BIOMASS DRYER FEED CONVEYOR		40.0	31.4		
W-	366A-D	DRYER FEED SCREW CONVEYOR		60.0	47.1		
W-	367A-D	DRYER DISCHARGE SCREW CONVEYOR		60.0	47.1		
W-	368	DRY FUEL SILO FEED CONVEYOR		15.0	11.8		
W-	369A,B	DRY SILO WITH LIVE BOTTOM RECLAIM		115.0	90.3		
W-	370	BIOMASS FEED BELT CONVEYOR		25.0	19.6		
W-	371	BIOMASS FEED DIVERTER GATE		1.0	0.8		
W-	372	BIOMASS FEED (REV) SHUTTLE CONVEYOR		10.5	8.2		
W-	373A,B	BIOMASS FEED TRANSFER CONVEYOR		15.0	11.8		
W-	374	DOLOMITE FEED STORAGE SILO W/LIVE BOTTOM		1.0	0.8		
W-	375	DOLOMITE FEED PNEUMATIC SYSTEM		40.0	31.4		
W-	376A/B	BOTTOM ASH PNEUMATIC SYSTEM		40.0	31.4		
W-	377	BOTTOM ASH SILO W/SCREW CONVEYOR		1.0	0.8		
W-	378	FILTER ASH PNEUMATIC SYSTEM		45.0	35.3		
W-	379	FILTER ASH SILO W/SCREW CONVEYOR		1.0	0.8		
		LIGHTING AND MISC. BUILDING LOADS			50.0		
		TOTAL CONNECTED POWER LOAD REQUIREMENTS			4,553.8		
		TOTAL ONLINE POWER CONSUMPTION (83% CONNECT)			3,779.6		

NOTES

1) INTERMITTENT SERVICE, NOT INCLUDED IN TOTAL

2) COOLING SYSTEM AND CONDENSATE SYSTEM LOAD TO SUPPORT 10 MW CONDENSING STEAM TURBINE NOT INCLUDED

Table 2-20: Electrical Summary - Tampella BGCC (Steam Dryer)

DETAILED ELECTRICAL SUMMARY			ISSUE 1			J.O. NO. 04996.00	
						SHEET 1 0F 1	
SERVICE TAMPELLA BGCC (STEAM DRYER)			BY PDW	CHECKED DLS	DATE 03/31/95		
ITEM NO.	SERVICE	NOTES	BHP	POWER KW			REV.
	GASIFIER ISLAND			141.5			
G- 401	COMBUSTION TURBINE AUXILIARIES			143.0			
G- 464	INCREMENTAL COOLING TOWER & PUMPING	2		7.3			
G- 476	GAS TURBINE FUEL OIL PUMP	1	10.0	7.8			
G- 478	LOCAL BOILER WATER TREATMENT		1.4	1.1			
P- 403	BLOWOFF TRANSFER PUMP		1.4	1.1			
P- 453	FLARE PROCESS CONDENSATE PUMP	1	5.0	3.9			
P- 454	FUEL OIL SUPPLY PUMP	1	10.0	7.8			
R- 401	AIR BOOSTER COMPRESSOR			1,523.8			
R- 451A	SERVICE & INSTRUMENT AIR COMPRESSOR (60%)		100.0	78.5			
T- 401	BIOMASS STEAM DRYER SYSTEM			1,060.0			
W- 452A/B	TRUCK DUMPER W/LIVE BOTTOM RECEIVING HOPPER		130.0	102.0			
W- 453	PROCESS BUILDING FEED CONV.		30.0	23.5			
W- 454	REVERSING CONVEYOR WITH MAG. METAL DETECTOR		20.0	15.7			
W- 455	DISC SCREEN		15.0	11.8			
W- 456	WET FUEL HOG		300.0	235.5			
W- 457	WET FUEL STORAGE PILE FEED		30.0	23.5			
W- 458	WET FUEL STORAGE PILE FEEDER FROM EXISTING HOG		25.0	19.6			
W- 460	WET FUEL STACKING CONVEYER		30.0	23.5			
W- 461A/B	WET FUEL CHAIN RECLAIMER		100.0	78.5			
W- 462	BIOMASS FEED CHAIN DISTRIBUTION CONVEYOR		50.0	39.2			
W- 464	BIOMASS DRYER FEED CONVEYOR		40.0	31.4			
W- 466A-D	DRYER FEED SCREW CONVEYOR		60.0	47.1			
W- 467A-D	DRYER DISCHARGE SCREW CONVEYOR		60.0	47.1			
W- 468	DRY FUEL SILO FEED CONVEYOR		15.0	11.8			
W- 469A,B	DRY SILO WITH LIVE BOTTOM RECLAIM		115.0	90.3			
W- 470	BIOMASS FEED BELT CONVEYOR		25.0	19.6			
W- 471	BIOMASS FEED DIVERTER GATE		1.0	0.8			
W- 472	BIOMASS FEED (REV) SHUTTLE CONVEYOR		10.5	8.2			
W- 473A,B	BIOMASS FEED TRANSFER CONVEYOR		15.0	11.8			
W- 474	DOLOMITE FEED STORAGE SILO W/LIVE BOTTOM		1.0	0.8			
W- 475	DOLOMITE FEED PNEUMATIC SYSTEM		40.0	31.4			
W- 476A/B	BOTTOM ASH PNEUMATIC SYSTEM		40.0	31.4			
W- 477	BOTTOM ASH SILO W/SCREW CONVEYOR		1.0	0.8			
W- 478	FILTER ASH PNEUMATIC SYSTEM		45.0	35.3			
W- 479	FILTER ASH SILO W/SCREW CONVEYOR		1.0	0.8			
	LIGHTING AND MISC. BUILDING LOADS			50.0			
	TOTAL CONNECTED POWER LOAD REQUIREMENTS			3,947.9			
	TOTAL ONLINE POWER CONSUMPTION (83% CONNECT)			3,276.8			
NOTES							
1) INTERMITTENT SERVICE, NOT INCLUDED IN TOTAL							
2) COOLING SYSTEM AND CONDENSATE SYSTEM LOAD TO SUPPORT 10 MW CONDENSING STEAM TURBINE NOT INCLUDED							

Table 2-21: Electrical Summary - Tampella BGCC/Ethanol Plant (Flue Gas Dryer)

DETAILED ELECTRICAL SUMMARY					J.O. NO. 04996.00	
					SHEET 1 0F 1	
SERVICE TAMPELLA BGCC/ETHANOL (FLUE GAS DRYER)			BY PDW	CHECKED DLS	DATE 03/31/95	
ITEM NO.	SERVICE	NOTE	BHP	POWER KW	EMERG. POWER	REV.
	GASIFIER ISLAND			145.9		
G- 701	COMBUSTION TURBINE AUXILIARIES			143.0		
G- 764	INCREMENTAL COOLING TOWER & PUMPING	2		24.6		
G- 772	WATER CHILLER (2 MOTORS)		2,500.0	1,962.4		
G- 776	GAS TURBINE FUEL OIL PUMP	1	10.0	7.8		
G- 778	LOCAL BOILER WATER TREATMENT		1.5	1.2		
P- 703A	BLOWOFF TRANSFER PUMP		1.5	1.2		
P- 753	FLARE PROCESS CONDENSATE PUMP	1	5.0	3.9		
P- 754	FUEL OIL SUPPLY PUMP	1	10.0	7.8		
R- 701	AIR BOOSTER COMPRESSOR			1,644.9		
R- 751	SERVICE & INST. AIR COMPRESSOR - BGCC (150 HP)		100.0	78.5		
R- 752	SERVICE & INST. AIR COMPRESSOR - EtOH (100 HP)		50.0	39.2		
T- 701A-D	BIOMASS DRYER SYSTEM		2,336.4	1,834.0		
W- 143	WOOD CHIP STACKING CONVEYOR		43.0	33.8		
W- 144A/B	WOOD CHIP RECLAIM DRAG CHAIN CONVEYOR		100.0	78.5		
W- 147	BIOMASS ETHANOL FEED BELT CONVEYOR		40.0	31.4		
W- 152A,B/C	TRUCK DUMPER W/LIVE BOTTOM RECEIVING HOPPER		255.0	200.2		
W- 153	PROCESS BUILDING FEED CONV.		30.0	23.5		
W- 154	REVERSING CONVEYOR WITH MAG METAL DETECTOR		20.0	15.7		
W- 155	DISC SCREEN		15.0	11.8		
W- 156	WET FUEL HOG		300.0	235.5		
W- 157	WET FUEL STORAGE PILE FEED		30.0	23.5		
W- 741	WOOD CHIP BYPASS BELT CONVEYOR		15.0	11.8		
W- 742	LIGNIN FEED BELT CONVEYOR		60.0	47.1		
W- 758	WET FUEL STORAGE PILE FEEDER FROM EXISTING HOG		25.0	19.6		
W- 760	WET FUEL STACKING CONVEYER & FLINGER		50.0	39.2		
W- 761A/B	WET FUEL CHAIN RECLAIMER		100.0	78.5		
W- 762	BIOMASS FEED CHAIN DISTRIBUTION CONVEYOR		50.0	39.2		
W- 764	BIOMASS DRYER FEED CONVEYOR		40.0	31.4		
W- 766A,B,C,D	DRYER FEED SCREW CONVEYOR		60.0	47.1		
W- 767A,B,C,D	DRYER DISCHARGE SCREW CONVEYOR		60.0	47.1		
W- 768	DRY FUEL SILO FEED CONVEYOR		15.0	11.8		
W- 769A,B	DRY SILO WITH LIVE BOTTOM RECLAIM		115.0	90.3		
W- 770	BIOMASS FEED BELT CONVEYOR		25.0	19.6		
W- 771	BIOMASS FEED DIVERTER GATE		1.0	0.8		
W- 772	BIOMASS FEED (REV) SHUTTLE CONVEYOR		10.5	8.2		
W- 773A,B	BIOMASS FEED TRANSFER CONVEYOR		15.0	11.8		
W- 774	DOLOMITE FEED STORAGE SILO W/LIVE BOTTOM		1.0	0.8		
W- 775	DOLOMITE FEED PNEUMATIC SYSTEM		40.0	31.4		
W- 776A,B	BOTTOM ASH PNEUMATIC SYSTEM		40.0	31.4		
W- 777	BOTTOM ASH SILO W/SCREW CONVEYOR		1.0	0.8		
W- 778	FILTER ASH PNEUMATIC SYSTEM		45.0	35.3		
W- 779	FILTER ASH SILO W/SCREW CONVEYOR		1.0	0.8		
200	PRETREATMENT AREA			5,300.0		
300	SSF FERMENTATION AREA			5,300.0		
400	DISTILLATION AREA			193.0		
500	STILLAGE HANDLING AREA			2,248.0		
600	CHEMICAL STORAGE AREA			94.0		
	LIGHTING AND MISC. BUILDING LOADS			50.0		
	TOTAL CONNECTED POWER LOAD REQUIREMENTS			20,317.7		
	TOTAL ONLINE POWER CONSUMPTION (83% CONNECT)			16,863.7		

NOTES

1) INTERMITTENT SERVICE, NOT INCLUDED IN TOTAL

2) COOLING SYSTEM AND CONDENSATE SYSTEM LOAD TO SUPPORT 10 MW CONDENSING STEAM TURBINE NOT INCLUDED

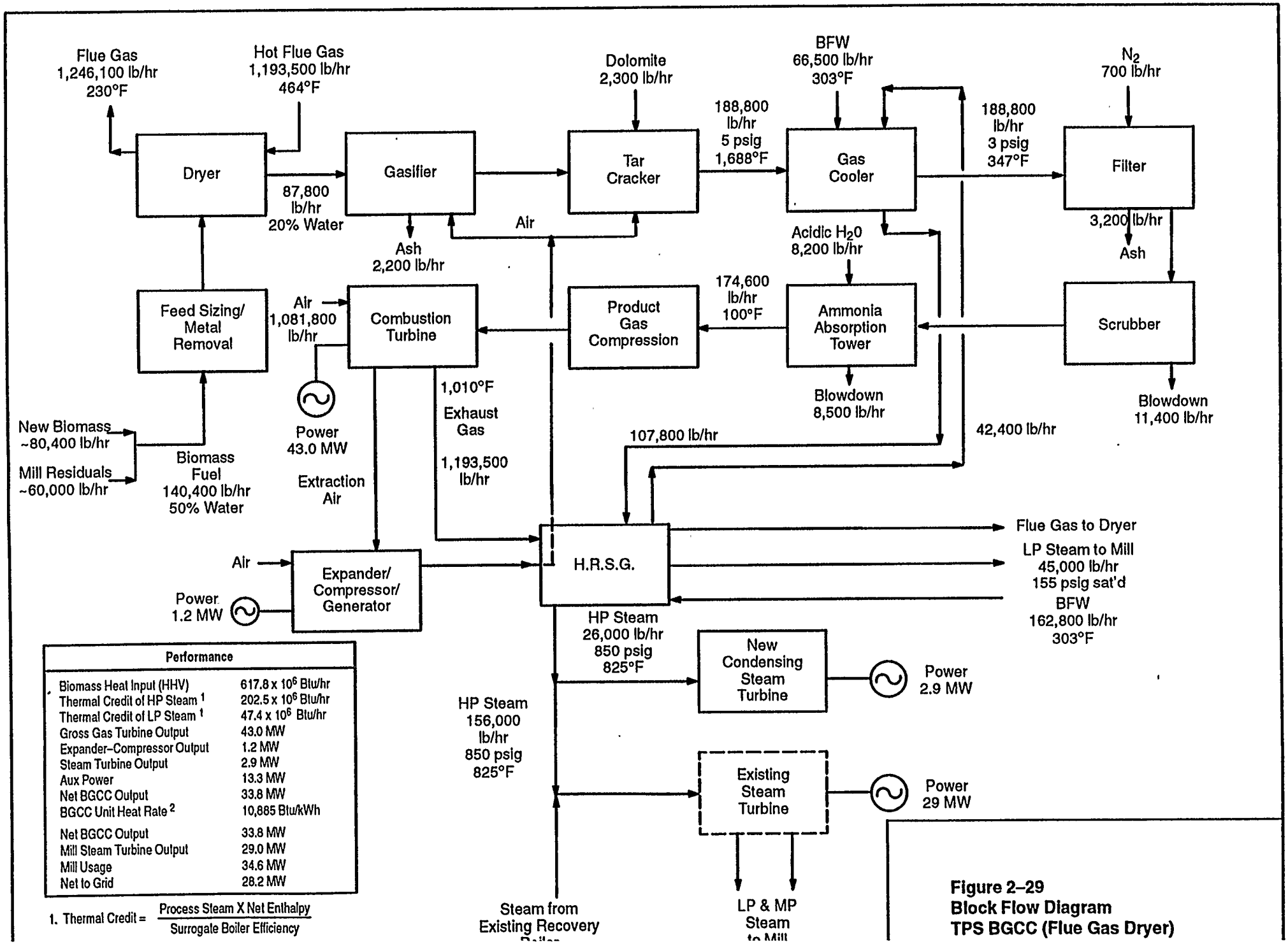

Performance	
Biomass Heat Input (HHV)	617.8 x 10^6 Btu/hr
Thermal Credit of HP Steam [1]	202.5 x 10^6 Btu/hr
Thermal Credit of LP Steam [1]	47.4 x 10^6 Btu/hr
Gross Gas Turbine Output	43.0 MW
Expander–Compressor Output	1.2 MW
Steam Turbine Output	2.9 MW
Aux Power	13.3 MW
Net BGCC Output	33.8 MW
BGCC Unit Heat Rate [2]	10,885 Btu/kWh
Net BGCC Output	33.8 MW
Mill Steam Turbine Output	29.0 MW
Mill Usage	34.6 MW
Net to Grid	28.2 MW

1. Thermal Credit = $\frac{\text{Process Steam X Net Enthalpy}}{\text{Surrogate Boiler Efficiency}}$

Figure 2–29
Block Flow Diagram
TPS BGCC (Flue Gas Dryer)

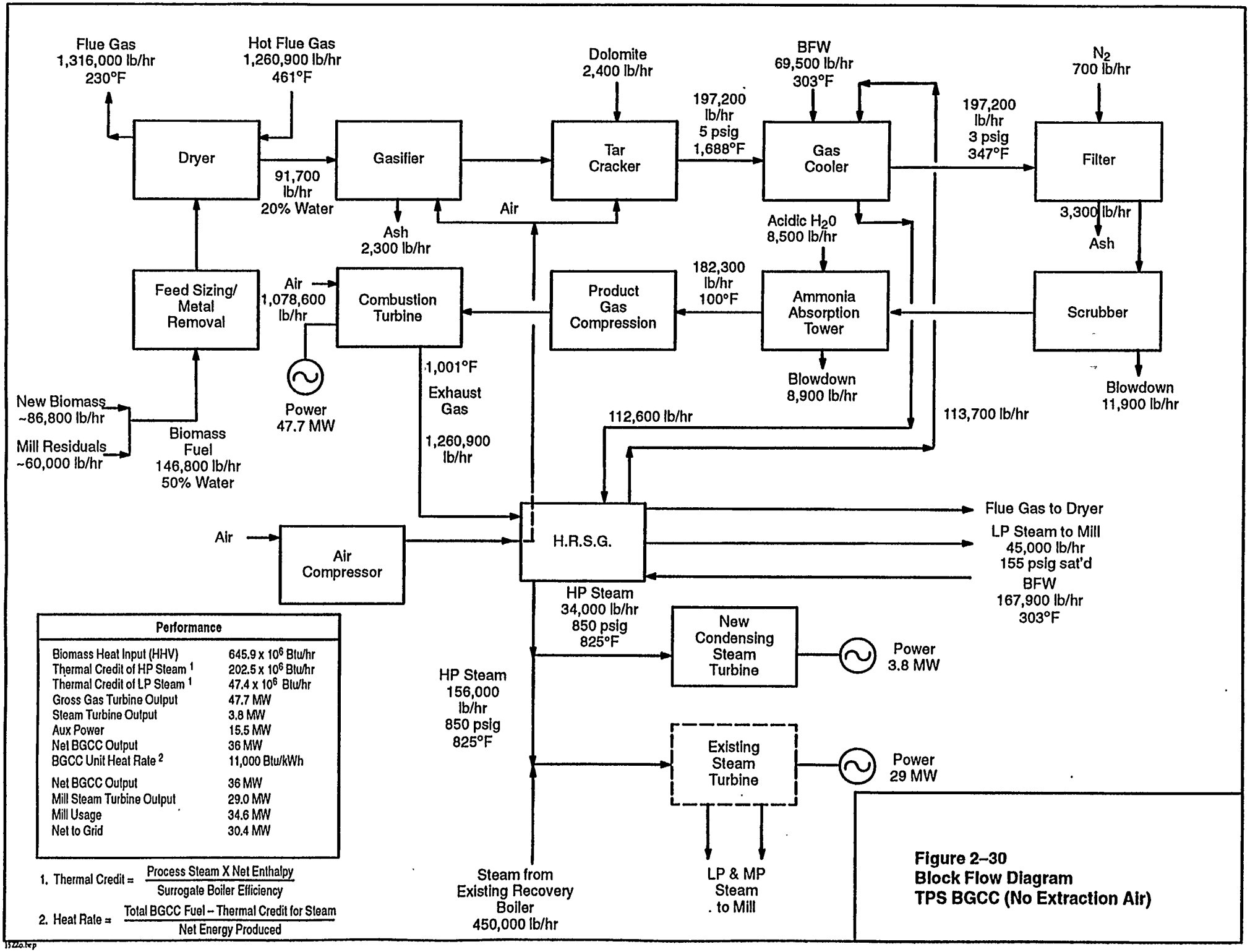

Performance	
Biomass Heat Input (HHV)	645.9 x 10^6 Btu/hr
Thermal Credit of HP Steam [1]	202.5 x 10^6 Btu/hr
Thermal Credit of LP Steam [1]	47.4 x 10^6 Btu/hr
Gross Gas Turbine Output	47.7 MW
Steam Turbine Output	3.8 MW
Aux Power	15.5 MW
Net BGCC Output	36 MW
BGCC Unit Heat Rate [2]	11,000 Btu/kWh
Net BGCC Output	36 MW
Mill Steam Turbine Output	29.0 MW
Mill Usage	34.6 MW
Net to Grid	30.4 MW

1. Thermal Credit = $\frac{\text{Process Steam X Net Enthalpy}}{\text{Surrogate Boiler Efficiency}}$

2. Heat Rate = $\frac{\text{Total BGCC Fuel – Thermal Credit for Steam}}{\text{Net Energy Produced}}$

Figure 2–30
Block Flow Diagram
TPS BGCC (No Extraction Air)

15Z2o.fwp

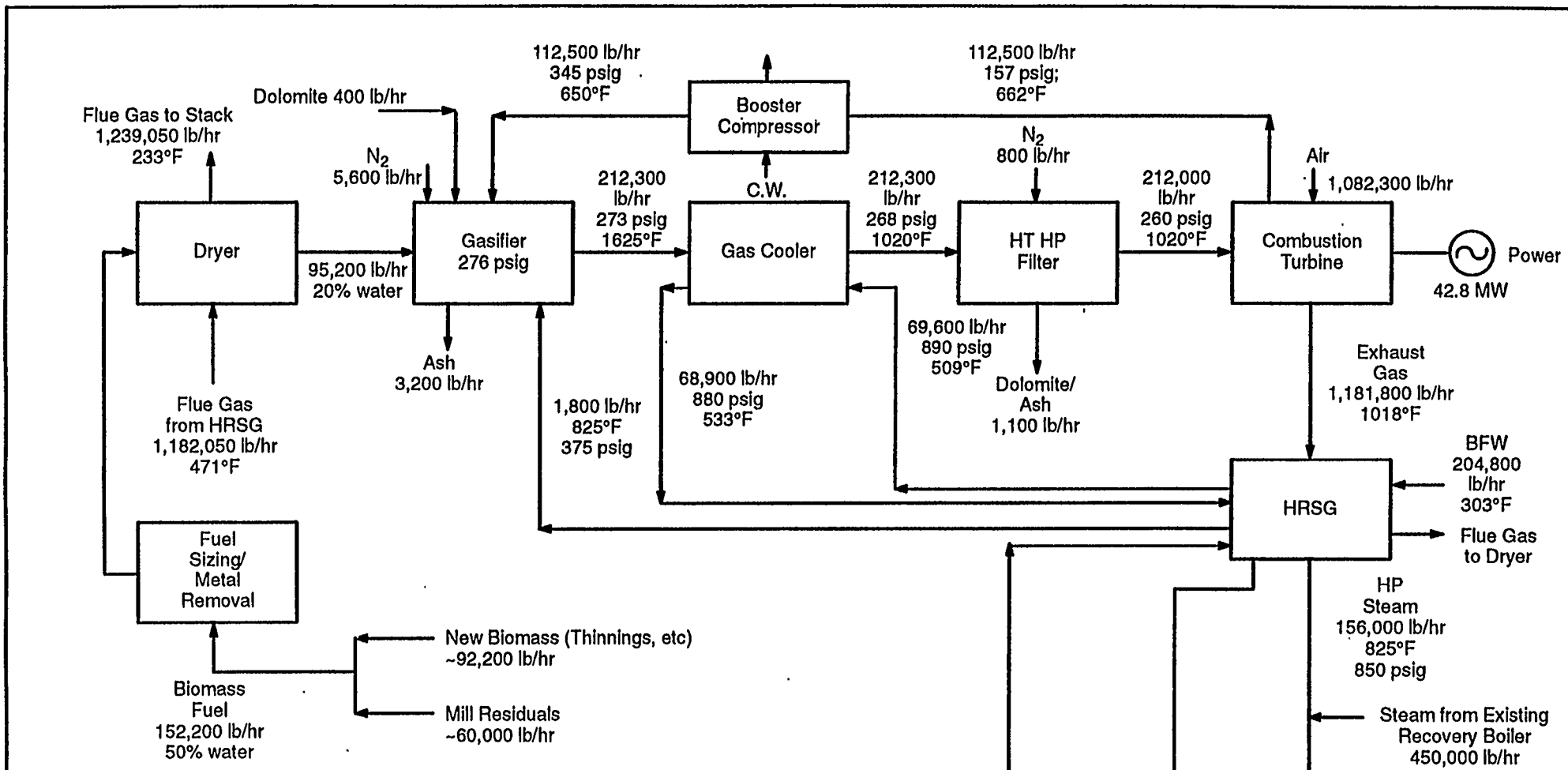

Performance	
Biomass Heat Input (HHV)	669.7 x 10^6 Btu/hr
Thermal Credit of HP Steam [1]	202.5 x 10^6 Btu/hr
Thermal Credit of LP Steam [1]	47.4 x 10^6 Btu/hr
Gross Gas Turbine Output	42.8 MW
Aux Power	3.8 MW
Net BGCC Output	39.0 MW
BGCC Unit Heat Rate [2]	10,764 Btu/kWh
Net BGCC Output	39.0 MW
Mill Steam Turbine Output	29.0 MW
Mill Usage	34.6 MW
Net to Grid	33.4 MW

1. Thermal Credit = $\frac{\text{Process Steam X Net Enthalpy}}{\text{Surrogate Boiler Efficiency}}$

2. Heat Rate = $\frac{\text{Total BGCC Fuel} - \text{Thermal Credit for Steam}}{\text{Net Energy Produced}}$

Figure 2–31
Block Flow Diagram
Tampella BGCC (Flue Gas Dryer)

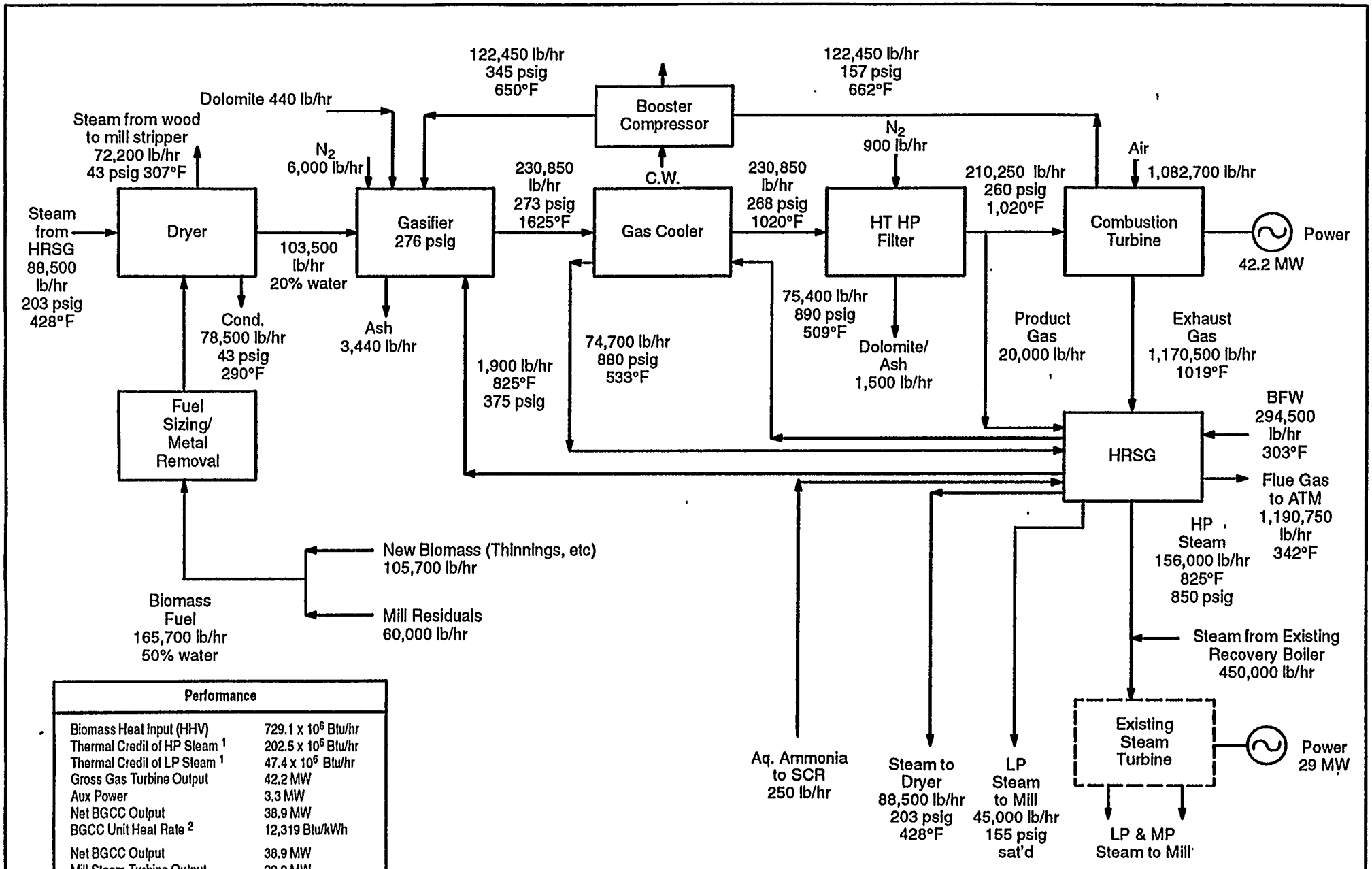

Performance	
Biomass Heat Input (HHV)	729.1 x 10^6 Btu/hr
Thermal Credit of HP Steam [1]	202.5 x 10^6 Btu/hr
Thermal Credit of LP Steam [1]	47.4 x 10^6 Btu/hr
Gross Gas Turbine Output	42.2 MW
Aux Power	3.3 MW
Net BGCC Output	38.9 MW
BGCC Unit Heat Rate [2]	12,319 Btu/kWh
Net BGCC Output	38.9 MW
Mill Steam Turbine Output	29.0 MW
Mill Usage	34.6 MW
Net to Grid	33.3 MW

1. Thermal Credit = $\frac{\text{Process Steam X Net Enthalpy}}{\text{Surrogate Boiler Efficiency}}$

2. Heat Rate = $\frac{\text{Total BGCC Fuel – Thermal Credit for Steam}}{\text{Net Energy Produced}}$

Figure 2–32
Block Flow Diagram
Tampella BGCC (Steam Dryer)

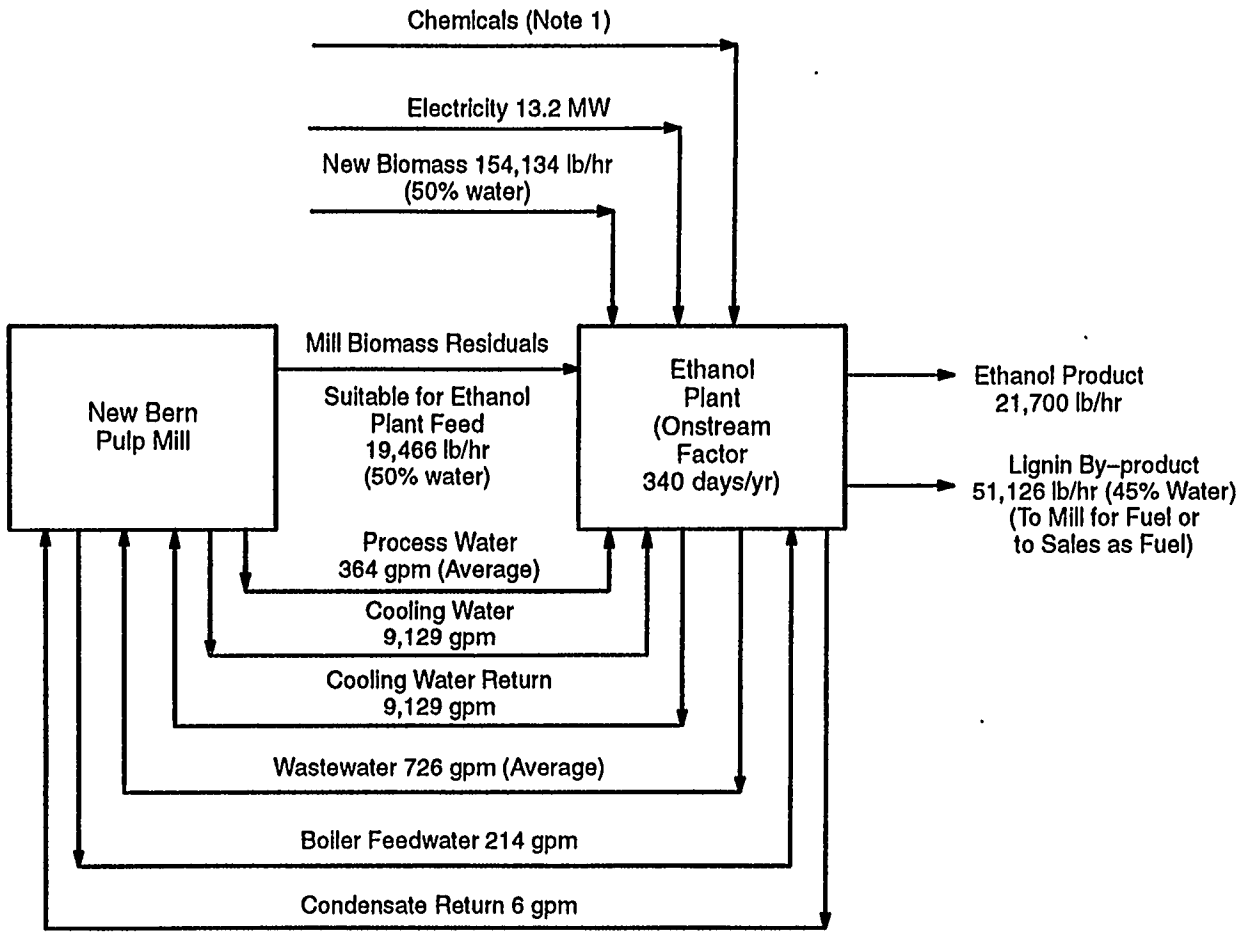

Note 1

Chemicals Summary:

	Average Hourly Requirement
Cellulase Enzyme (Wet Basis)	290 gal
Sulfuric Acid (93 wt%)	450 lbs
Aqueous Ammonia (30 wt%)	27.5 lbs
Corn Steep Liquor (45 wt%)	83.3 lbs
Phosphoric Acid	5.8 lbs
Lime	175 lbs
Sodium Hydroxide (50 wt%)	15 lbs
Antifoam	41.7 lbs
Denaturant (Gasoline)	67.2 gal
Fuel Oil (for Packaged Boiler)	760.5 gal

Figure 2–33
Ethanol Plant
Overall Material Balance and Mill Interfaces

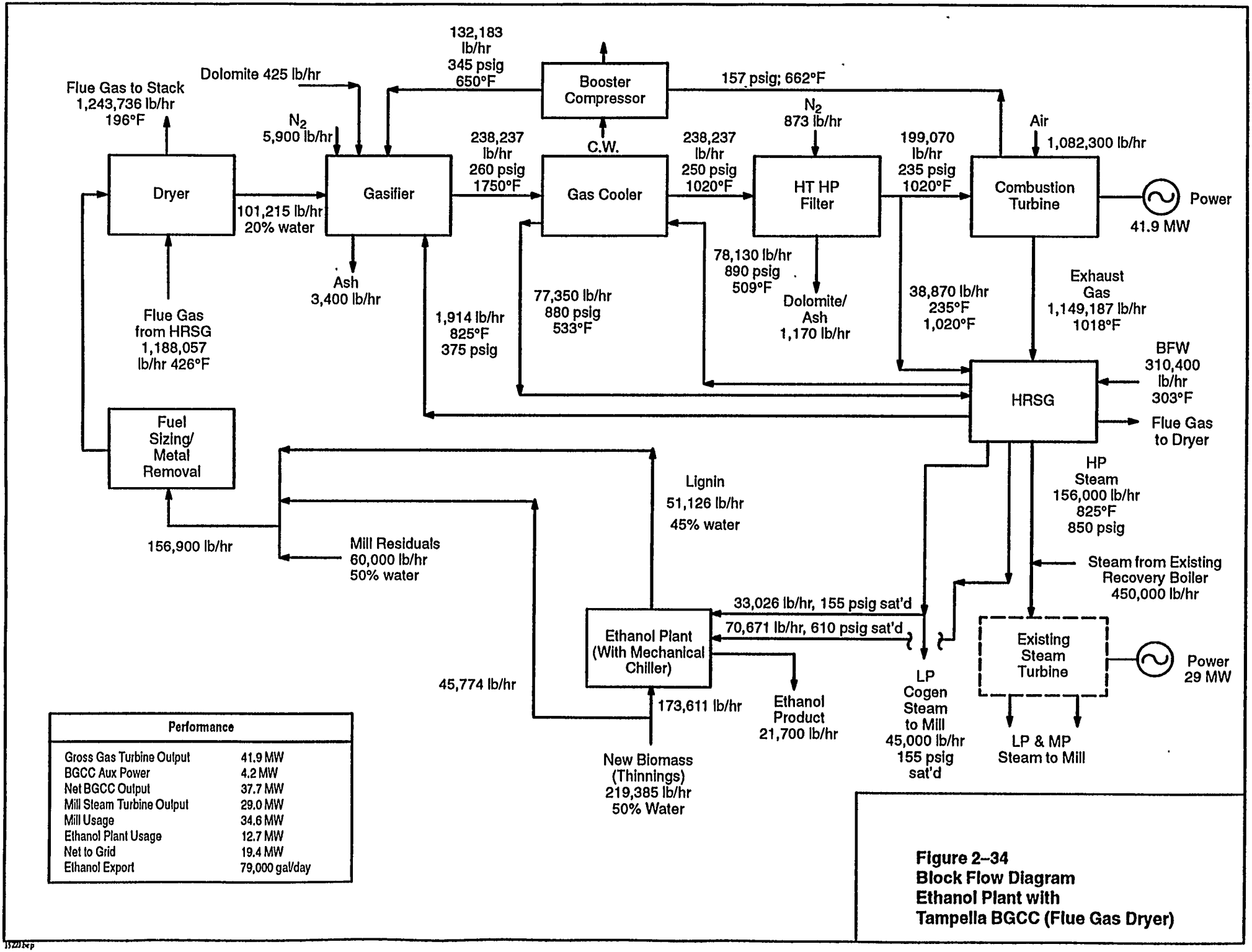

Performance	
Gross Gas Turbine Output	41.9 MW
BGCC Aux Power	4.2 MW
Net BGCC Output	37.7 MW
Mill Steam Turbine Output	29.0 MW
Mill Usage	34.6 MW
Ethanol Plant Usage	12.7 MW
Net to Grid	19.4 MW
Ethanol Export	79,000 gal/day

Figure 2–34
Block Flow Diagram
Ethanol Plant with
Tampella BGCC (Flue Gas Dryer)

2.7 Cost Estimates

Stone & Webster prepared capital cost estimates and operating and maintenance cost estimates for the BGCC cogeneration plants and for the ethanol plant. Weyerhaeuser provided corresponding cost information for a "Base Case" which is refurbishment of the existing bark boiler to extend its life and to allow it once again to burn mill residuals in compliance with emission limits. For all cases, including the Base Case, Stone & Webster included the cost for the 10 MW condensing steam turbine to allow the mill steam production to remain constant during most swings in mill steam usage and to eliminate reductions in electrical generation.

2.7.1 Capital Cost Estimates

The approach for developing the capital cost estimates for the BGCC cases was as follows:

- Gasification technology suppliers were requested to provide costs for major equipment within the gasification island.

- Stone & Webster reviewed and checked pricing provided by gasification technology suppliers. The costs provided by Tampella included all the piping within the gasifier island. TPS submitted installed costs for the gasifier and tar cracker, including support steel and auxiliaries such as fuel and dolomite feed systems, cyclones, ash removal, and local instrumentation and control. TPS also provided "ball park" costs for the dryer, fuel gas compressor, fuel gas particulate filter (baghouse), water scrubber, and ammonia scrubber. Stone & Webster obtained actual quotes for the dryer and the TPS fuel gas compressor. Stone & Webster also priced the air supply system for TPS and designed and costed the TPS water scrubber and ammonia absorption tower.

- Stone & Webster obtained pricing for major equipment/systems required for material handling, the cogeneration unit (power block), cooling water, service and instrument air, flare, distillate oil storage and supply, and overall plant control.

- Stone & Webster estimated the costs of buildings and structures based on dimensions and materials of construction.

- Material costs for civil/structural, instruments and controls (with the exception of the distributed control system and the continuous emission monitoring system which were priced), electrical, piping and valves, insulation, fire protection and painting, and site improvements were calculated as percentages of total equipment costs based on factors Stone & Webster developed from detailed estimates of gasification plants and combined cycle plants. These factors were adjusted to compensate for piping included in the Tampella-provided costs and support steel and instrumentation and controls in the TPS-provided costs.

- Installation (labor) costs for major equipment were based on a combination of vendor recommendations and Stone & Webster experience.

- Installation labor for bulk materials was based on usual material/labor splits.

- Head office (engineering, procurement, other project services, and field support) costs and construction management costs were calculated as a percentage of the total direct cost based on Stone & Webster experience.

- A 10 percent allowance for indeterminate (AFI) was added to arrive at the total installed plant cost. AFI covers items not yet defined at this stage of engineering.

Stone & Webster believes that the accuracy of the installed cost estimate is ±30 percent. Prepaid royalties, preproduction (startup) costs, spare parts, working capital and the initial fill of catalyst and chemicals costs must be added to obtain a total "overnight" capital cost. The initial process charge of catalyst and chemicals is small and was ignored. The other items were estimated based on the following procedure from the "Technical Assessment Guide" published by the Electric Power Research Institute:

- Prepaid royalties at 0.5 percent of the process capital.

- Preproduction (startup costs) totalling one month fixed operating cost, three months variable operating cost, 25 percent of full capacity fuel cost for one month and 2 percent of total installed cost.

- Working (inventory) capital equivalent to 30 days' supply of fuel plus consumables.

- Spare parts at 0.5 percent of the total installed cost.

The estimate summaries for the Tampella flue gas dryer-based BGCC plant, the Tampella steam dryer-based BGCC plant, and the TPS (flue gas dryer-based) BGCC plant are given in Tables 2-22, 2-23, and 2-24.

Two ethanol plant estimates were prepared. The first estimate is for an ethanol plant which would be added to the Base Case (the mill with the refurbished bark-fired boiler). An oil-fired packaged boiler is included in the ethanol plant to supply the ethanol plant steam requirements and the stillage or lignin waste from the ethanol plant is sold as fuel. The second estimate is for an ethanol plant integrated with a BGCC plant at the mill. In this case, the BGCC plant is sized to replace the mill's bark-fired boiler and provide steam to the ethanol plant. The lignin from the ethanol plant satisfies a portion of BGCC plant feed requirement.

Stone & Webster was given sufficient process information to size and cost all of the equipment in the ethanol plant with the exception of the pretreatment section. Amoco, the technology licensor, provided a lump sum estimated cost for the pretreatment step. Stone & Webster applied recent in-house experience from two other biomass-to-ethanol projects in developing some equipment costs and in establishing factors for bulk materials and labor. The majority of the equipment costs were based on new quotes.

Indirect costs were developed as follows:

- Head office (engineering, procurement, other project services, and field support) costs and the cost for construction management were calculated as a percentage of the total direct cost based on Stone & Webster experience.

- A 10 percent allowance for indeterminates (AFI) was added to cover items not yet defined at this stage of engineering design.

- Estimates for prepaid royalties, spare parts, working capital and preproduction (startup) were developed using the approach given in the "Technical Assessment Guide" (TAG) published by the Electric Power Research Institute. Prepaid royalties are assumed to be 0.5 percent of the process capital. The spare parts allowance is 0.5 percent of the total installed cost. Working capital covers 30 days' supply of feedstock plus consumables. Start-up costs for the ethanol plant

were assumed to be equal to the sum of one month fixed operating costs (to cover training), 25 percent of the full capacity biomass feed cost for one month (to account for inefficient operation) and 2 percent of the total installed cost (to cover modifications needed to bring the unit to full capacity). Normally, one to three months variable operating cost is included in the startup cost estimate. However, as discussed in Section 2.7.2, the ethanol plant variable cost is high due to the assumed cost of the proprietary enzyme. Since the enzyme cost is uncertain, adding variable cost to the start-up cost estimate was considered to be unreasonable.

The cost estimate summary for the ethanol plant (excluding the cost of the Base Case mill's refurbished bark-fired boiler and new condensing steam turbine) is shown in Table 2-25. The cost estimate summary for the integrated BGCC-ethanol plant is given in Table 2-26. Stone & Webster believes the accuracy of the estimates is ±30 percent. The estimates are present day overnight costs (no escalation or interest during construction) and do not include permitting costs.

The Base Case capital cost was developed as follows:

Cost to Refurbish Bark-Fired Boiler	$14.0 million
Installed Cost for New Condensing Steam Turbine, Auxiliaries, and Associated Equipment	$6.2 million
Total Installed Cost	20.2 million
Startup	0.6 million
Spare Parts	0.1 million
Working Capital	0.2 million
Total (Overnight) Capital Cost	$21.1 million

The total capital cost for all of the cases studied are as follows:

Case	Overnight Capital Cost
Tampella BGCC (Flue Gas Dryer Design)	$97,930,000
Tampella BGCC (Steam Dryer Design)	$97,689,000
TPS BGCC (Flue Gas Dryer Design)	$106,470,000
Base Case Mill	$21,100,000
Ethanol Plant	$96,830,000
Base Case Mill plus Ethanol Plant	$117,930,000
Integrated BGCC-Ethanol Plant	$189,802,000

The economic analyses in Section 4 compare the Base Case mill, the Tampella (flue gas dryer design) BGCC plant, the Base Case mill with the ethanol plant, and the integrated BGCC/ethanol plant.

It must be emphasized that the above costs for the BGCC and ethanol plants are not exactly comparable to greenfield plants. The design and costs of the BGCC plants and the ethanol plant were impacted by mill integration. The integration benefitted from usage of the existing mill demineralized, service, potable boiler feedwater and cooling water systems and both the ethanol plant and the TPS BGCC Plant have

wastewater which is sent to the mill wastewater treatment system. In addition, although a steam turbine was included for the BGCC plants, it is smaller than would have been required for a greenfield BGCC power plant.

Although the capital cost estimates show the TPS BGCC cogen plant capital cost being 10 percent higher than the Tampella BGCC plant, the accuracy of the cost estimating of the gasifier area is insufficient to substantiate this difference. The only conclusion that can be reached is that the capital cost of the atmospheric and pressurized BGCC designs at the 60 MW equivalent plant size are very close.

Extrapolating from the data developed for the New Bern BGCC Cogen retrofit, a greenfield BGCC power plant (no cogeneration) based on the General Electric Frame 6B gas turbine would have the following cost and performance:

- Total Plant Investment - $1,750/kW
- Net Output - 59 MW
- Biomass to Net Electricity Conversion Efficiency - 30 percent

EPRI provided the following cost and performance information for a BGCC power plant based on an advanced General Electric 6FA gas turbine:

- Total Plant Investment - $1,765/kW
- Net Output - 100 MW
- Efficiency - 35.5%

By capacity factoring from the New Bern data, Stone & Webster would have expected the capital cost for a 100 MW BGCC power plant to be $1,535/kW, which is slightly lower than EPRI's cost. The higher efficiency of the 100 MW plant is attributable to the advanced gas turbine.

The BGCC plant cost, especially for the advanced pressurized gasifier, hot gas cleanup designs, is expected to decrease as the technology matures. Reductions can occur as a result of the following:

- Reduction in contingencies, due to increased confidence
- Competitive pressures
- Reduction in manufacturing costs for the advanced technology components, e.g., hot gas filters
- Reduction in engineering costs due to standardization
- Improvements in constructability
- Design improvements which reduce equipment costs or sparing requirements

It is interesting to note that the development of coal gasification combined cycle technology focused on maximizing efficiency and not minimizing capital cost. The developers have now turned their attention to reducing capital cost and have identified several innovations which should produce cost reductions on the order of 20 percent without any significant decrease in efficiency. BGCC technology affords the same opportunity for cost reduction.

As discussed in Section 2.3, the ethanol plant design is conservative in many areas due to lack of physical data on process streams. Also the mild climate in New Bern required a sizeable chilled water system.

Further process development and design optimization studies have the potential to yield significant cost reductions.

2.7.2 Operating and Maintenance Cost Estimates

Operating and maintenance costs were calculated for the Base Case, each of the three BGCC cases, the ethanol plant, and the BGCC/ethanol plant. The costs are comprised of fixed and variable operating costs which are divided as follows:

a. Fixed Operating Costs (independent of production)

- Permanent plant operating and maintenance staff including supervision and administration.
- Maintenance performed on a regular schedule, not specifically tied to the quantity of fuel or feed consumption; this includes materials and any purchased (contract) labor in addition to the permanent maintenance staff.

b. Variable Operating Costs (related to production)

- Consumables such as water, chemicals, and catalysts
- Ash disposal.
- Combustion turbine maintenance including materials and any purchased (contract) labor.
- Credits for sales of by-products.

The total annual operating and maintenance cost is the fixed cost plus the variable cost. Since the variable cost is dependent on the annual plant output, the anticipated capacity factor must be defined in order to calculate the annual variable cost. The capacity factor is the actual annual production divided by the theoretical annual production if the plant operated continuously at full capacity. An 85 percent capacity factor was used for the BGCC plant based on Tampella's recommendation. A 92 percent capacity factor was used for the ethanol plant, although fermentation plants should be able to achieve a capacity factor of 94 percent.

The biomass fuel or feedstock cost is not included in the total annual operating and maintenance cost.

The operating and maintenance costs were calculated using a spreadsheet program which clearly shows the basis for the calculation. The spreadsheet outputs for the cases are presented in Tables 2-27 through 2-32.

The results compare as follows:

Case	Annual Fixed O&M Cost, $	Hourly Variable O&M Cost, $	Total Annual O&M Cost
Tampella BGCC (Flue Gas Dryer)	$3.7 million	$199	$5.2 million
Tampella BGCC (Steam Dryer)	$3.7 million	$212	$5.3 million
TPS BGCC (Flue Gas Dryer)	$3.7 million	$132	$4.7 million
Ethanol Plant	$3.3 million	$3,040	$27.8 million
BGCC/Ethanol Plant	$6.6 million	$2,556	$27.1 million
Base Case Mill	$1.7 million	$23	$1.9 million

Table 2-22 Estimate Summary - Tampella BGCC (Flue Gas Drying)

CLIENT	STATION
Weyerhaeuser	New Bern Facility, NC

DESCRIPTION OF WORK

Tampella BGCC Plant (Flue Gas Drying Case)

DESCRIPTION	1ST QUARTER 1995 U.S. $ MATERIAL	LABOR	TOTAL
PLANT EQUIPMENT :			
DRYER	$4,000,000	$2,500,000	$6,500,000
GASIFIER FEED SYSTEM (Material Costs include piping)	$4,800,000	$864,000	$5,664,000
GASIFICATION SYSTEM (Material Costs include piping)	$14,900,000	$2,682,000	$17,582,000
POWER BLOCK	$16,379,000	$1,373,000	$17,752,000
BALANCE OF PLANT - COOLING TOWER	$200,000	$24,000	$224,000
BALANCE OF PLANT - FLARE SYSTEM	$300,000	$50,000	$350,000
BALANCE OF PLANT - GAS TURBINE FUEL OIL SYSTEM	$187,000	$23,000	$210,000
MATERIAL HANDLING SYSTEM	$6,228,000	$758,000	$6,986,000
SUB-TOTAL EQUIPMENT	$46,994,000	$8,274,000	$55,268,000
BULK MATERIALS :			
CIVIL & STRUCTURAL INCL PIPERACKS	$470,000	$470,000	$940,000
INSTRUMENTATION/CONTROLS - DCS	$1,100,000	$30,000	$1,130,000
INSTRUMENTATION/CONTROLS - CONTINUOUS EMISSION CONTROL	$236,000	$11,000	$247,000
BALANCE OF INSTRUMENTATION & CONTROLS	$705,000	$176,000	$881,000
ELECTRICAL	$3,300,000	$3,300,000	$6,600,000
PIPING & VALVES	$2,115,000	$2,115,000	$4,230,000
INSULATION, FIRE PROTECTION SYS & PAINTING	$470,000	$470,000	$940,000
BUILDINGS(INCL EQUIPT FDN INSIDE) & STRUCTURES	$2,244,800	$1,843,200	$4,088,000
SITE IMPROVEMENTS	$470,000	$470,000	$940,000
SUB-TOTAL BULKS	$11,110,800	$8,885,200	$19,996,000
TOTAL DIRECT COST	$58,104,800	$17,159,200	$75,264,000
INDIRECT COST :			
HEAD OFFICE COST			$7,526,000
CONSTRUCTION MANAGEMENT			$2,258,000
TOTAL INDIRECT COST			$9,784,000
TOTAL ESTIMATED COST			$85,048,000
AFI (ALLOWANCE FOR INDETERMINATES)			$8,505,000
TOTAL INSTALLED COST			$93,553,000
PREPAID ROYALTIES			$462,000
PREPRODUCTION (STARTUP)			$2,767,000
SPARE PARTS			$468,000
WORKING CAPITAL			$680,000
TOTAL CAPITAL COST			$97,930,000

NOTE: EXCLUDES ESCALATION,INTEREST DURING CONSTRUCTION, AND PERMITTING COSTS

The difference between the Tampella and TPS BGCC plants operating and maintenance costs is due to consumables. Tampella uses more nitrogen and requires ammonia and catalyst for the selective catalytic reduction (SCR) NO_x control unit in the heat recovery steam generator. Since ammonia is removed from the TPS fuel gas prior to combustion, an SCR unit should not be necessary.

The ethanol plant operating and maintenance cost is dominated by the cost of the proprietary enzyme. The enzyme was assumed to cost $2/liter which, by itself, results in an hourly variable cost of $2,195. A comparison of the ethanol plant cost with and without the enzyme cost is as follows:

	With Enzyme Cost	**Without Enzyme Cost**
Fixed Annual O&M	$3.3 million	$3.3 million
Variable Hourly O&M	$3,040	$845
Total Annual O&M	$27.8 million	$10.1 million

Approximately 65 percent of the annual operating and maintenance cost of the ethanol plant (excluding the cost of the biomass feed) is contributed by the enzyme cost at $2/liter. Enzyme cost is one of the major parameters affecting ethanol plant economics and its impact is studied in Section 4.

For the ethanol plant alone which would be combined with the Base Case Mill costs, it is assumed that the lignin waste (stillage) from the ethanol plant is sold as fuel for $0.96/million Btu (HHV basis). In the case of the integrated BGCC/ethanol plant, the lignin is used as fuel in the BGCC plant, reducing the outside biomass purchases. In this instance, a credit is not given for the lignin by-product in the O&M cost estimate.

Table 2-23 Estimate Summary - Tampella BGCC (Steam Drying)

CLIENT	STATION
Weyerhaeuser	New Bern Facility, NC

DESCRIPTION OF WORK
Tampella BGCC Plant (Steam Drying Case)

DESCRIPTION	1ST QUARTER 1995 U.S. $ MATERIAL	LABOR	TOTAL
PLANT EQUIPMENT :			
DRYER	$5,000,000	$3,000,000	$8,000,000
GASIFIER FEED SYSTEM (Material Costs include piping)	$4,800,000	$864,000	$5,664,000
GASIFICATION SYSTEM (Material Costs include piping)	$15,800,000	$2,844,000	$18,644,000
POWER BLOCK	$14,422,000	$1,261,000	$15,683,000
BALANCE OF PLANT - COOLING TOWER	$200,000	$24,000	$224,000
BALANCE OF PLANT - FLARE SYSTEM	$300,000	$50,000	$350,000
BALANCE OF PLANT - GAS TURBINE FUEL OIL SYSTEM	$187,000	$23,000	$210,000
MATERIAL HANDLING SYSTEM	$5,595,000	$682,000	$6,277,000
SUB-TOTAL EQUIPMENT	$46,304,000	$8,748,000	$55,052,000
BULK MATERIALS :			
CIVIL & STRUCTURAL INCL PIPERACKS	$463,000	$463,000	$926,000
INSTRUMENTATION/CONTROLS - DCS	$1,100,000	$30,000	$1,130,000
INSTRUMENTATION/CONTROLS - CONTINUOUS EMISSION CONTROL	$236,000	$11,000	$247,000
BALANCE OF INSTRUMENTATION & CONTROLS	$695,000	$174,000	$869,000
ELECTRICAL	$3,300,000	$3,300,000	$6,600,000
PIPING & VALVES	$2,084,000	$2,084,000	$4,168,000
INSULATION, FIRE PROTECTION SYS & PAINTING	$463,000	$463,000	$926,000
BUILDINGS(INCL EQUIPT FDN INSIDE) & STRUCTURES	$2,244,800	$1,843,200	$4,088,000
SITE IMPROVEMENTS	$463,000	$463,000	$926,000
SUB-TOTAL BULKS	$11,048,800	$8,831,200	$19,880,000
TOTAL DIRECT COST	$57,352,800	$17,579,200	$74,932,000
INDIRECT COST :			
HEAD OFFICE COST			$7,493,000
CONSTRUCTION MANAGEMENT			$2,248,000
TOTAL INDIRECT COST			$9,741,000
TOTAL ESTIMATED COST			$84,673,000
AFI (ALLOWANCE FOR INDETERMINATES)			$8,467,000
TOTAL INSTALLED COST			$93,140,000
PREPAID ROYALTIES			$460,000
PREPRODUCTION (STARTUP)			$2,806,000
SPARE PARTS			$466,000
WORKING CAPITAL			$817,000
TOTAL CAPITAL COST			$97,689,000

NOTE: EXCLUDES ESCALATION, INTEREST DURING CONSTRUCTION, AND PERMITTING COSTS.

Table 2-24 Estimate Summary - TPS BGCC (Flue Gas Drying)

CLIENT	STATION
Weyerhaeuser	New Bern Facility, NC

DESCRIPTION OF WORK
TPS BGCC Plant

DESCRIPTION	1ST QUARTER 1995 U.S. $ MATERIAL	LABOR	TOTAL
PLANT EQUIPMENT :			
DRYER	$4,000,000	$2,500,000	$6,500,000
GASIFICATION SYSTEM	$22,923,000	$2,515,000	$25,438,000
POWER BLOCK	$16,341,000	$1,402,000	$17,743,000
BALANCE OF PLANT - COOLING TOWER	$200,000	$24,000	$224,000
BALANCE OF PLANT - FLARE SYSTEM	$300,000	$50,000	$350,000
BALANCE OF PLANT - GAS TURBINE FUEL OIL SYSTEM	$187,000	$23,000	$210,000
MATERIAL HANDLING SYSTEM	$6,185,000	$752,000	$6,937,000
SUB-TOTAL EQUIPMENT	$50,136,000	$7,266,000	$57,402,000
BULK MATERIALS :			
CIVIL & STRUCTURAL INCL PIPERACKS	$501,000	$501,000	$1,002,000
INSTRUMENTATION/CONTROLS - DCS	$1,100,000	$30,000	$1,130,000
INSTRUMENTATION/CONTROLS - CONTINUOUS EMISSION CONTROL	$236,000	$11,000	$247,000
BALANCE OF INSTRUMENTATION & CONTROLS	$608,000	$152,000	$760,000
ELECTRICAL	$3,500,000	$3,500,000	$7,000,000
PIPING & VALVES	$4,512,000	$4,512,000	$9,024,000
INSULATION, FIRE PROTECTION SYS & PAINTING	$501,000	$501,000	$1,002,000
BUILDINGS(INCL EQUIPT FDN INSIDE) & STRUCTURES	$1,881,800	$1,698,200	$3,580,000
SITE IMPROVEMENTS	$501,000	$501,000	$1,002,000
SUB-TOTAL BULKS	$13,340,800	$11,406,200	$24,747,000
TOTAL DIRECT COST	$63,476,800	$18,672,200	$82,149,000
INDIRECT COST :			
HEAD OFFICE COST			$8,215,000
CONSTRUCTION MANAGEMENT			$2,464,000
TOTAL INDIRECT COST			$10,679,000
TOTAL ESTIMATED COST			$92,828,000
AFI (ALLOWANCE FOR INDETERMINATES)			$9,283,000
TOTAL INSTALLED COST			$102,111,000
PREPAID ROYALTIES			$504,000
PREPRODUCTION (STARTUP)			$2,778,000
SPARE PARTS			$511,000
WORKING CAPITAL			$566,000
TOTAL CAPITAL COST			$106,470,000

NOTE: EXCLUDES ESCALATION, INTEREST DURING CONSTRUCTION, AND PERMITTING COSTS.

Table 2-25 Estimate Summary - Ethanol Plant

CLIENT	STATION
Weyerhaeuser	New Bern Facility, NC

DESCRIPTION OF WORK
Ethanol Plant

DESCRIPTION	1ST QUARTER 1995 U.S. $ MATERIAL	LABOR	TOTAL
ETHANOL PLANT (EXCLUDING UTILITIES)			
TOWERS	$880,000	$44,000	$924,000
DRUMS/VESSELS	$6,140,000	$245,600	$6,385,600
PUMPS	$1,920,000	$230,400	$2,150,400
STORAGE TANKS	$1,140,000	$57,000	$1,197,000
HEAT EXCHANGERS	$1,430,000	$42,900	$1,472,900
SPECIAL EQUIPMENT	$19,466,000	$1,621,920	$21,087,920
SOLIDS HANDLING EQUIPMENT	$3,685,000	$267,950	$3,952,950
SUB-TOTAL EQUIPMENT	$34,661,000	$2,509,770	$37,170,770
BULK INSTALLATION MATERIALS			
CIVIL & STRUCTURAL	$2,231,198	$3,640,376	$5,871,573
INSTRUMENTATION AND CONTROLS	$4,272,618	$1,942,099	$6,214,717
ELECTRICAL	$2,034,936	$2,817,604	$4,852,540
PIPING & VALVES	$4,825,951	$7,755,992	$12,581,943
INSULATION, FIRE PROTECTION SYS AND PAINTING	$430,274	$956,166	$1,386,440
BUILDINGS	$1,784,500	$1,215,500	$3,000,000
SITE IMPROVEMENTS	$82,416	$659,329	$741,745
RAIL SPUR EXTENSION	$53,333	$66,667	$120,000
SUB-TOTAL BULKS	$15,715,227	$19,053,732	$34,768,959
DIRECT COST	$50,376,227	$21,563,502	$71,939,729
ETHANOL PLANT UTILITIES			
POWER BLOCK PACKAGE BOILER	$900,000	$100,000	$1,000,000
BALANCE OF PLANT - COOLING TOWER	$250,000	$30,000	$280,000
BALANCE OF PLANT - FLARE SYSTEM AND CHILLER	$520,000	$112,000	$632,000
SUB-TOTAL EQUIPMENT	$770,000	$152,000	$1,912,000
BULK MATERIALS :			
CIVIL & STRUCTURAL INCL PIPERACKS	$8,000	$8,000	$16,000
BALANCE OF INSTRUMENTATION & CONTROLS	$12,000	$3,000	$15,000
ELECTRICAL	$23,000	$23,000	$46,000
PIPING & VALVES	$35,000	$35,000	$70,000
INSULATION, FIRE PROTECTION SYS & PAINTING	$8,000	$8,000	$16,000
SITE IMPROVEMENTS	$8,000	$8,000	$16,000
SUB-TOTAL BULKS	$94,000	$85,000	$179,000
DIRECT COST	$864,000	$237,000	$2,091,000
DIRECT COST - ETHANOL PLANT			$71,940,000
DIRECT COST - UTILITIES SUPPORT			$2,091,000
TOTAL DIRECT COST			$74,031,000
HEAD OFFICE COST			$7,403,000
CONSTRUCTION MANAGEMENT			$2,221,000
TOTAL INDIRECT COST			$9,624,000
TOTAL ESTIMATED COST			$83,655,000
AFI (ALLOWANCE FOR INDETERMINATES)			$8,366,000
TOTAL INSTALLED COST			$90,925,000
PREPAID ROYALTIES			$455,000
PREPRODUCTION (STARTUP)			$2,312,000
SPARE PARTS			$460,000
WORKING CAPITAL			$2,678,000
TOTAL CAPITAL COST			$96,830,000

NOTE:EXCLUDES ESCALATION, INTEREST DURING CONSTRUCTION, AND PERMITTING COSTS

Table 2-26 Estimate Summary - Tampella BGCC/Ethanol Plant

CLIENT	STATION
Weyerhaeuser	New Bern Facility, NC

DESCRIPTION OF WORK

BGCC/ETHANOL COMBINED PLANT

DESCRIPTION	BGCC			ETHANOL			1ST QUARTER 1995 U.S. $K TOTAL
	MATERIAL	LABOR	TOTAL	MATERIAL	LABOR	TOTAL	
PLANT EQUIPMENT	$44,762	$8,153	$52,915	$34,661	$2,500	$37,161	$90,076
SUB-TOTAL EQUIPMENT	$44,762	$8,153	$52,915	$34,661	$2,500	$37,161	$90,076
BULK MATERIALS :							
CIVIL & STRUCTURAL	$448	$448	$896	$2,231	$3,640	$5,871	$6,767
INSTRUMENTATION/CONTROLS - DCS	$1,100	$30	$1,130	-	-	-	$1,130
INSTRN/CONTROLS - CONTINUOUS EMISSION CONTROL	$236	$11	$247	-	-	-	$247
BALANCE OF INSTRUMENTATION & CONTROLS	$671	$168	$839	$4,273	$1,942	$6,215	$7,054
ELECTRICAL	$3,300	$3,300	$6,600	$2,035	$2,818	$4,853	$11,453
PIPING & VALVES	$2,014	$2,014	$4,028	$4,826	$7,756	$12,582	$16,610
INSULATION, FIRE PROTECTION SYS & PAINTING	$448	$448	$896	$430	$956	$1,386	$2,282
BUILDINGS(INCL EQUIPT FDN INSIDE) & STRUCTURES	$2,245	$1,843	$4,088	$1,785	$1,216	$3,001	$7,089
SITE IMPROVEMENTS	$448	$448	$896	$82	$659	$741	$1,637
RAIL SPUR EXTENSION	-	-	-	$53	$67	$120	$120
SUB-TOTAL BULKS	$10,910	$8,710	$19,620	$15,715	$19,054	$34,769	$54,389
TOTAL DIRECT COST	$55,672	$16,863	$72,535	$50,376	$21,554	$71,930	$144,465
INDIRECT COST :							
HEAD OFFICE COST			$7,254			$7,193	$14,447
CONSTRUCTION MANAGEMENT			$2,176			$2,158	$4,334
TOTAL INDIRECT COST			$9,430			$9,351	$18,781
TOTAL ESTIMATED COST			$81,965			$81,281	$163,246
AFI (ALLOWANCE FOR INDETERMINATES)			$8,196			$8,128	$16,324
TOTAL INSTALLED COST			$90,161			$89,409	$179,570
						PREPAID ROYALTIES	$897
						PREPRODUCTION (STARTUP)	$5,079
						SPARE PARTS	$898
						WORKING CAPITAL	$3,358
						TOTAL CAPITAL COST	$189,802

NOTE: EXCLUDES ESCALATION, INTEREST DURING CONSTRUCTION, AND PERMITTING COSTS

TAMPELLA BGCC FLUE GAS DRYER DESIGN

O&M COST SUMMARY EXCLUDING BIOMASS COST

ACCT DESCRIPTION			
TOTAL O&M	5155	k$/yr	Based on Capacity Factor of 85 %
FIXED O&M	3,656	k$/yr	
Fixed mat'l O&M	1,305	k$/yr	
Fixed labor O&M	2,351	k$/yr	
VARIABLE O&M	1,499	k$/yr	0.301 $/MBtu HHV
Variable labor O&M	98	k$/yr	
Variable mat'l O&M	1,401	k$/yr	

Basis for calculation of O&M costs:

Plant Capital Cost	98	M$
Full load heat input	670	Biomass 10^6 Btu/hr HHV basis
Capacity factor	85	%
Annual operation	7,446	hrs per year at full load
Operating labor rate	20.00	$/hr (salary)
Staff maint labor rate	15.00	$/hr (salary)
Labor Supervision	30	% of labor
Overhead	30	% of labor & supervision
Contract labor rate	49.50	$/hr
Contract Supervision	10	% of contract labor

FIXED O&M

Operating staff	6.25	# workers at site per shift (4 shifts)
Truck Unloading	40	Hours per week
Wood Pile	2	# workers managing wood pile per shift
Gasifier	1	# workers operating gasifier per shift
Cntrl Rm Ops-BGCC	2	# workers in BGCC control room per shift
Roving Ops - BGCC	1	# operators roving BGCC plant per shift
Cntrl Rm Ops-EtOH	0	# workers in EtOH control room per shift
Roving Ops - EtOH	0	# operators roving EtOH plant per shift
Operating labor cost	1,040	k$/yr [6.25 x 2080 hr/yr x 4 shifts x 20 $/hr /1000]
Supervision	312	k$/yr [30/100 x operating labor cost]
Labor overhead	406	k$/yr [30/100 x (operating + supervision costs)]
Total operating labor cost	*1,758*	$k/yr [total of labor cost, supervision, and overhead]
Maintenance staff	3	# workers at site (1 shift only)
Maint labor cost	94	$k/yr [*3* x 2080 hr/yr x *15* $/hr / 1000]
Supervision	28	$k/yr [*30* /100 x maintenance labor cost]
Labor overhead	37	$k/yr [*30* /100 x (maint labor + supervision)]
Total fixed maint labor cost	*158*	$k/yr [total of labor cost, supervision, and overhead]

Maintenance materials and contract labor

Major equipment maintenance

	Period months	Materials $ k	Contract Labor hours	Contract Labor $ k	Average Cost Materials $ k/yr	Average Cost Labor $ k/yr	note
Gasifier Package	12	1,005	8,000	436	1,005	436	1
HRSG	12	50	0	0	50	0	
Stm turbine - major	60	0	0	0	0	0	
Stm turbine - minor	18	0	0	0	0	0	
Ethanol Plant	18	0	0	0	0	0	
B.O.P. - major	60	0	0	0	0	0	
B.O.P. - minor	12	250	0	0	250	0	
					1,305	*436*	

Annual fixed maintenance: 1.94 % of plant capital cost of $98 million — Note 2

1 Contract labor is calculated as hours (plus supervision) times contract labor rate. Totals per maintenance cycle are divided by (period in months/12).

2 Includes permanent plant maintenance staff labor cost.

SUMMARY OF FIXED O&M

	$k/yr
Operating labor	*1,758*
Maintenance labor	*158*
Contract labor	*436*
Maintenance materials	*1,305*
Total fixed O&M materials	*1,305*
Total fixed O&M labor	*2,351*

Note: Shaded cells are for spreadsheet inputs; clear cells are calculated

VARIABLE O&M

Consumables

Process water

Usage rate	0	gal/hr
Unit cost	0.06	$/kgal
Process water cost	*0.00*	*$/hr*
	0	$k/yr

Cooling system makeup

Usage rate	30	gpm
Raw water unit cost	0.06	$/kgal
Raw water cost	*0.10*	*$/hr*
	1	$k/yr

Demineralized water for feedwater makeup

Usage rate	240	gal/hr
Raw water unit cost	0.06	$/kgal
Demineralization unit cost	1.45	$/kgal
Demin water cost	*0.36*	$/hr
	3	*$k/yr*

Catalysts and chemicals

Item	Usage	Rate	$/Unit	Units	$/hr	k$/yr
Dolomite	0.20	TPH	25	Tons	5	37
Continuous N2	3.0	TPH	25	Tons	74	549
Liquid N2	72	TPY	150	Tons	1	11
Aqueous NH3	255	PPH	175	Tons	22	166
SCR Catalyst	1	Lot	75,000	Lot	9	75
Enzyme	0	GPD	2	Liter	0	0
Sulfuric Acid	0	TPD	75	Ton	0	0
Glucose Syrup	0	TPD	0.06	Lb	0	0
Denaturant	0	GPD	0.65	Gal	0	0
Pkgd Boiler Fuel Oil	0	MBTU/Hr	2.86	MBTU	0	0
Misc.	8760	Hrs	5	Hrs	5	44
				Total	116	882

Total consumables: *886* *$k/yr*

Other Variable O&M Costs

Ash Disposal

Production Rate	2.2	tons/hr
Disposal Cost	12.00	$/ton
	26	*$/hr*

Incremental Maintenance on Combustion Turbine

Number of CT's: 1

Cost of Maintenance and Overhauls per CT

CT - Combustion Inspection	500	contract labor hours per inspection
Contract labor/inspection	27	k$ [labor hrs x $49.50/hr x (1 + 10/100)]
Mat'ls cost per inspection	125	k$
Time between inspections	8,000	hrs
Incremental material cost	*15.63*	*$/hr per CT, materials*
Incremental labor cost	*3.40*	*$/hr per CT [labor hrs x $49.50/hr x (1+10/100)]*
CT Hot Section Inspection	1,925	contract labor hours per inspection
Contract labor cost	105	k$ [labor hrs x $49.50/hr x (1 + 10/100)]
Mat'ls cost per inspection	72	k$
Time between inspections	24,000	hrs
Incremental material cost	*3.00*	*$/hr per CT, materials*
Incremental labor cost	*4.37*	*$/hr per CT [labor hrs x $49.50/hr x (1+10/100)]*
CT Major Inspection	3,520	contract labor hours per inspection
Contract labor cost	192	k$ [labor hrs x $49.50/hr x (1 + 10/100)]
Mat'ls cost per inspection	895	k$
Time between inspections	36,000	hrs
Incremental material cost	*24.86*	*$/hr per CT, materials*
Incremental labor cost	*5.32*	*$/hr per CT [labor hrs x $49.50/hr x (1+10/100)]*

Total incremental mat'l cost *43.49* *$/hr [total of above materials x number of CT's]*
Total incremental labor cost *13.09* *$/hr [total of above labor x number of CT's]*

SUMMARY OF VARIABLE O&M	$k/yr	$/hr
Consumables	886	116.32
Other Variable O&M Costs	192	25.80
CT Maintenance materials	324	43.49
Total variable O&M material	1,401	186
Total variable O&M labor	98	13

TAMPELLA BGCC STEAM DRYER DESIGN

O&M COST SUMMARY EXCLUDING BIOMASS COST

ACCT DESCRIPTION			
TOTAL O&M	5256	k$/yr	Based on Capacity Factor of 85 %
FIXED O&M	3,656	k$/yr	
Fixed mat'l O&M	1,305	k$/yr	
Fixed labor O&M	2,351	k$/yr	
VARIABLE O&M	1,599	k$/yr	0.295 $/MBtu HHV
Variable labor O&M	98	k$/yr	
Variable mat'l O&M	1,502	k$/yr	

Basis for calculation of O&M costs:

Plant Capital Cost	98	M$
Full load heat input	729	Biomass 10^6 Btu/hr HHV basis
Capacity factor	85	%
Annual operation	7,446	hrs per year at full load
Operating labor rate	20.00	$/hr (salary)
Staff maint labor rate	15.00	$/hr (salary)
Labor Supervision	30	% of labor
Overhead	30	% of labor & supervision
Contract labor rate	49.50	$/hr
Contract Supervision	10	% of contract labor

FIXED O&M

Operating staff	6.25	# workers at site per shift (4 shifts)
Truck Unloading	40	Hours per week
Wood Pile	2	# workers managing wood pile per shift
Gasifier	1	# workers operating gasifier per shift
Cntrl Rm Ops-BGCC	2	# workers in BGCC control room per shift
Roving Ops - BGCC	1	# operators roving BGCC plant per shift
Cntrl Rm Ops-EtOH	0	# workers in EtOH control room per shift
Roving Ops - EtOH	0	# operators roving EtOH plant per shift
Operating labor cost	1,040	k$/yr [6.25 x 2080 hr/yr x 4 shifts x 20 $/hr /1000]
Supervision	312	k$/yr [30/100 x operating labor cost]
Labor overhead	406	k$/yr [30/100 x (operating + supervision costs)]
Total operating labor cost	*1,758*	$k/yr [total of labor cost, supervision, and overhead]
Maintenance staff	3	# workers at site (1 shift only)
Maint labor cost	94	$k/yr [*3* x 2080 hr/yr x *15* $/hr / 1000]
Supervision	28	$k/yr [*30* /100 x maintenance labor cost]
Labor overhead	37	$k/yr [*30* /100 x (maint labor + supervision)]
Total fixed maint labor cost	*158*	$k/yr [total of labor cost, supervision, and overhead]

Maintenance materials and contract labor

Major equipment maintenance	Period months	Materials $ k	Contract Labor hours	Contract Labor $ k	Average Cost Materials $ k/yr	Average Cost Labor $ k/yr	note
Gasifier Package	12	1,005	8,000	436	1,005	436	1
HRSG	12	50	0	0	50	0	
Stm turbine - major	60	0	0	0	0	0	
Stm turbine - minor	18	0	0	0	0	0	
Ethanol Plant	18	0	0	0	0	0	
B.O.P. - major	60	0	0	0	0	0	
B.O.P. - minor	12	250	0	0	250	0	
					1,305	*436*	
Annual fixed maintenance	1.94	% of plant capital cost of $98 million			Note 2		

1 Contract labor is calculated as hours (plus supervision) times contract labor rate.
Totals per maintenance cycle are divided by (period in months/12).

2 Includes permanent plant maintenance staff labor cost

SUMMARY OF FIXED O&M	$k/yr
Operating labor	*1,758*
Maintenance labor	*158*
Contract labor	*436*
Maintenance materials	*1,305*
Total fixed O&M materials	*1,305*
Total fixed O&M labor	*2,351*

Note: Shaded cells are for spreadsheet inputs; clear cells are calculated

VARIABLE O&M

Consumables

Process water

Usage rate	0	gal/hr
Unit cost	0.06	$/kgal
Process water cost	*0.00*	*$/hr*
	0	$k/yr

Cooling system makeup

Usage rate	30	gpm
Raw water unit cost	0.06	$/kgal
Raw water cost	*0.10*	*$/hr*
	1	$k/yr

Demineralized water for feedwater makeup

Usage rate	1,575	gal/hr
Raw water unit cost	0.06	$/kgal
Demineralization unit cost	1.45	$/kgal
Demin water cost	*2.51*	$/hr
	19	*$k/yr*

Catalysts and chemicals

Item	Usage	Rate	$/Unit	Units	$/hr	k$/yr
Dolomite	0.22	TPH	25	Tons	6	41
Continuous N2	3.2	TPH	25	Tons	81	601
Liquid N2	72	TPY	150	Tons	1	11
Aqueous NH3	255	PPH	175	Tons	22	166
SCR Catalyst	1	Lot	75,000	Lot	9	75
Enzyme	0	GPD	2	Liter	0	0
Sulfuric Acid	0	TPD	75	Ton	0	0
Glucose Syrup	0	TPD	0.08	Lb	0	0
Denaturant	0	GPD	0.65	Gal	0	0
Pkgd Boiler Fuel Oil	0	MBTU/Hr	2.86	MBTU	0	0
Misc.	8760	Hrs	5	Hrs	5	44
				Total	123	938

Total consumables	*957*	*$k/yr*

Other Variable O&M Costs

Ash Disposal

Production Rate	2.5	tons/hr
Disposal Cost	12.00	$/ton
	30	*$/hr*

Incremental Maintenance on Combustion Turbine

Number of CT's: 1

Cost of Maintenance and Overhauls per CT

CT Combustion Inspection	500	contract labor hours per inspection
Contract labor/inspection	27	k$ [labor hrs x $49.50/hr x (1 + 10/100)]
Mat'ls cost per inspection	125	k$
Time between inspections	8,000	hrs
Incremental material cost	*15.63*	*$/hr per CT, materials*
Incremental labor cost	*3.40*	*$/hr per CT [labor hrs x $49.50/hr x (1+10/100)]*
CT Hot Section Inspection	1,925	contract labor hours per inspection
Contract labor cost	105	k$ [labor hrs x $49.50/hr x (1 + 10/100)]
Mat'ls cost per inspection	72	k$
Time between inspections	24,000	hrs
Incremental material cost	*3.00*	*$/hr per CT, materials*
Incremental labor cost	*4.37*	*$/hr per CT [labor hrs x $49.50/hr x (1+10/100)]*
CT Major Inspection	3,520	contract labor hours per inspection
Contract labor cost	192	k$ [labor hrs x $49.50/hr x (1 + 10/100)]
Mat'ls cost per inspection	895	k$
Time between inspections	36,000	hrs
Incremental material cost	*24.86*	*$/hr per CT, materials*
Incremental labor cost	*5.32*	*$/hr per CT [labor hrs x $49.50/hr x (1+10/100)]*

Total incremental mat'l cost	*43.49*	*$/hr [total of above materials x number of CT's]*
Total incremental labor cost	*13.09*	*$/hr [total of above labor x number of CT's]*

SUMMARY OF VARIABLE O&M	$k/yr	$/hr
Consumables	957	126
Other Variable O&M Costs	221	30
CT Maintenance materials	324	43
Total variable O&M material	1,502	199
Total variable O&M labor	98	13

TPS BGCC FLUE GAS DRYER DESIGN

O&M COST SUMMARY EXCLUDING BIOMASS COST

ACCT DESCRIPTION			
TOTAL O&M	4694	k$/yr	Based on Capacity Factor of 85 %
FIXED O&M	3,703	k$/yr	
Fixed mat'l O&M	1,347	k$/yr	
Fixed labor O&M	2,356	k$/yr	
VARIABLE O&M	990	k$/yr	0.215 $/MBtu HHV
Variable labor O&M	98	k$/yr	
Variable mat'l O&M	893	k$/yr	

Basis for calculation of O&M costs:

Plant Capital Cost	106	M$
Full load heat input	618	Biomass 10^6 Btu/hr HHV basis
Capacity factor	85	%
Annual operation	7,446	hrs per year at full load
Operating labor rate	20.00	$/hr (salary)
Staff maint labor rate	15.00	$/hr (salary)
Labor Supervision	30	% of labor
Overhead	30	% of labor & supervision
Contract labor rate	49.50	$/hr
Contract Supervision	10	% of contract labor

FIXED O&M

Operating staff	6.25	# workers at site per shift (4 shifts)
Truck Unloading	40	Hours per week
Wood Pile	2	# workers managing wood pile per shift
Gasifier	1	# workers operating gasifier per shift
Cntrl Rm Ops-BGCC	2	# workers in BGCC control room per shift
Roving Ops - BGCC	1	# operators roving BGCC plant per shift
Cntrl Rm Ops-EtOH	0	# workers in EtOH control room per shift
Roving Ops - EtOH	0	# operators roving EtOH plant per shift
Operating labor cost	1,040	k$/yr [6.25 x 2080 hr/yr x 4 shifts x 20 $/hr /1000]
Supervision	312	k$/yr [30/100 x operating labor cost]
Labor overhead	406	k$/yr [30/100 x (operating + supervision costs)]
Total operating labor cost	*1,758*	$k/yr [total of labor cost, supervision, and overhead]
Maintenance staff	3	# workers at site (1 shift only)
Maint labor cost	94	$k/yr [*3* x 2080 hr/yr x *15* $/hr / 1000]
Supervision	28	$k/yr [*30* /100 x maintenance labor cost]
Labor overhead	37	$k/yr [*30* /100 x (maint labor + supervision)]
Total fixed maint labor cost	*158*	$k/yr [total of labor cost, supervision, and overhead]

Maintenance materials and contract labor

Major equipment maintenance

	Period months	Materials $ k	Contract Labor hours	Contract Labor $ k	Average Cost Materials $ k/yr	Average Cost Labor $ k/yr	note
Gasifier Package	12	1,005	8,000	436	1,005	436	1
HRSG	12	50	0	0	50	0	
Stm turbine - major	60	144	175	10	29	2	note
Stm turbine - minor	18	20	80	4	13	3	2
Ethanol Plant	18	0	0	0	0	0	
B.O.P. - major	60	0	0	0	0	0	
B.O.P. - minor	12	250	0	0	250	0	
					1,347	*440*	

Annual fixed maintenance 1.84 % of plant capital cost of $106 million Note 3

1 Contract labor is calculated as hours (plus supervision) times contract labor rate. Totals per maintenance cycle are divided by (period in months/12).

2 Steam turbine maintenance costs are prorated to cover the portion of the total steam turbine maintenance cost attributable to the steam flow provided by the BGCC plant, i.e. does not include the 10 MW condensing steam turbine capacity provided to debottleneck the existing mill backpressure steam turbine.

3 Includes permanent plant maintenance staff labor cost

SUMMARY OF FIXED O&M

	$k/yr
Operating labor	*1,758*
Maintenance labor	*158*
Contract labor	*440*
Maintenance materials	*1,347*
Total fixed O&M materials	*1,347*
Total fixed O&M labor	*2,356*

Note: Shaded cells are for spreadsheet inputs; clear cells are calculated

VARIABLE O&M

Consumables

Process water

Usage rate	0	gal/hr
Unit cost	0.06	$/kgal
Process water cost	*0.00*	*$/hr*
	0	$k/yr

Cooling system makeup

Usage rate	120	gpm
Raw water unit cost	0.06	$/kgal
Raw water cost	*0.40*	*$/hr*
	3	$k/yr

Demineralized water for feedwater makeup

Usage rate	175	gal/hr
Raw water unit cost	0.06	$/kgal
Demineralization unit cost	1.45	$/kgal
Demin water cost	*0.26*	$/hr
	2	*$k/yr*

Catalysts and chemicals

Item	Usage	Rate	$/Unit	Units	$/hr	k$/yr
Dolomite	1.15	TPH	25	Tons	29	214
Continuous N2	0.4	TPH	25	Tons	9	65
Liquid N2	0	TPY	150	Tons	0	0
Aqueous NH3	0	PPH	175	Tons	0	0
SCR Catalyst	0	Lot	75,000	Lot	0	0
Enzyme	0	GPD	2	Liter	0	0
Sulfuric Acid	0	TPD	75	Ton	0	0
Glucose Syrup	0	TPD	0.08	Lb	0	0
Denaturant	0	GPD	0.85	Gal	0	0
Pkgd Boiler Fuel Oil	0	MBTU/Hr	2.86	MBTU	0	0
Misc.	8760	Hrs	5	Hrs	5	44
				Total	43	323

Total consumables 328 *$k/yr*

Other Variable O&M Costs

Ash Disposal

Production Rate	2.7	tons/hr
Disposal Cost	12.00	$/ton
	32	*$/hr*

Incremental Maintenance on Combustion Turbine

Number of CT's: 1

Cost of Maintenance and Overhauls per CT

CT Combustion Inspection	500	contract labor hours per inspection
Contract labor/inspection	27	k$ [labor hrs x $49.50/hr x (1 + 10/100)]
Mat'ls cost per inspection	125	k$
Time between inspections	8,000	hrs
Incremental material cost	*15.63*	*$/hr per CT, materials*
Incremental labor cost	*3.40*	*$/hr per CT [labor hrs x $49.50/hr x (1+10/100)]*
CT Hot Section Inspection	1,825	contract labor hours per inspection
Contract labor cost	105	k$ [labor hrs x $49.50/hr x (1 + 10/100)]
Mat'ls cost per inspection	72	k$
Time between inspections	24,000	hrs
Incremental material cost	*3.00*	*$/hr per CT, materials*
Incremental labor cost	*4.37*	*$/hr per CT [labor hrs x $49.50/hr x (1+10/100)]*
CT Major Inspection	3,520	contract labor hours per inspection
Contract labor cost	192	k$ [labor hrs x $49.50/hr x (1 + 10/100)]
Mat'ls cost per inspection	895	k$
Time between inspections	36,000	hrs
Incremental material cost	*24.86*	*$/hr per CT, materials*
Incremental labor cost	*5.32*	*$/hr per CT [labor hrs x $49.50/hr x (1+10/100)]*

Total incremental mat'l cost *43.49* *$/hr [total of above materials x number of CT's]*
Total incremental labor cost *13.09* *$/hr [total of above labor x number of CT's]*

SUMMARY OF VARIABLE O&M	$k/yr	$/hr
Consumables	328	43.21
Other Variable O&M Costs	241	32.40
CT Maintenance materials	324	43.49
Total variable O&M material	893	119
Total variable O&M labor	98	13

ETHANOL PLANT

O&M COST SUMMARY EXCLUDING BIOMASS COST

ACCT	DESCRIPTION				
	TOTAL O&M	27829	k$/yr	Based on Capacity Factor of 92 %	
	FIXED O&M	3,294	k$/yr		
	Fixed mat'l O&M	1,300	k$/yr		
	Fixed labor O&M	1,994	k$/yr		
	VARIABLE O&M	24,535	k$/yr	3.986	$/MBtu HHV of feed

Basis for calculation of O&M costs:

Plant Capital Cost	98	M$
Feed heat input	764	Biomass 10^6 Btu/hr HHV basis
Capacity factor	92	%
Annual operation	8,059	hrs per year at full load
Operating labor ra	20.00	$/hr (salary)
Staff maint labor ra	15.00	$/hr (salary)
Labor Supervision	30	% of labor
Overhead	30	% of labor & supervision
Contract labor rate	49.50	$/hr
Contract Supervision	10	% of contract labor

FIXED O&M

Operating staff	5.25	# workers at site per shift (4 shifts)
Truck Unloading	40	Hours per week
Wood Pile	1	# workers managing wood pile per shift
Cntrl Rm Ops-EtOH	1	# workers in EtOH control room per shift
Roving Ops - EtOH	3	# operators roving EtOH plant per shift
Operating labor cost	874	k$/yr [5.25 x 2080 hr/yr x 4 shifts x 20 $/hr /1000]
Supervision	262	k$/yr [30/100 x operating labor cost]
Labor overhead	341	k$/yr [30/100 x (operating + supervision costs)]
Total operating labor cost	*1,476*	$k/yr [total of labor cost, supervision, and overhead]

Maintenance staff	6	# workers at site (1 shift only)
Maint labor cost	187	$k/yr [*6* x 2080 hr/yr x *15* $/hr / 1000]
Supervision	56	$k/yr [*30* /100 x maintenance labor cost]
Labor overhead	73	$k/yr [*30* /100 x (maint labor + supervision)]
Total fixed maint labor cost	*316*	$k/yr [total of labor cost, supervision, and overhead]

Maintenance materials and contract labor

Major equipment maintenance	Period months	Materials $ k	Contract Labor hours	Contract Labor $ k	Average Cost Materials $ k/yr	Average Cost Labor $ k/yr	note
Ethanol Plant	12	1,300	3,700	201	1,300	201	
B.O.P. - major	60	0	0	0	0	0	
B.O.P. - minor	12	0	0	0	0	0	
					1,300	*201*	

Annual fixed maintenance 1.85 % of plant capital cost of $98 million Note 2

1 Contract labor is calculated as hours (plus supervision) times contract labor rate. Totals per maintenance cycle are divided by (period in months/12).

2 Includes permanent plant maintenance staff labor cost

SUMMARY OF FIXED O&M	$k/yr
Operating labor	*1,476*
Maintenance labor	*316*
Contract labor	*201*
Maintenance materials	*1,300*
Total fixed O&M materials	*1,300*
Total fixed O&M labor	*1,994*

Note: Shaded cells are for spreadsheet inputs; clear cells are calculated

VARIABLE O&M

Consumables

Process water

Usage rate	21,600	gal/hr
Unit cost	0.06	$/kgal
Process water cost	1.20	*$/hr*
	10	$k/yr

Cooling system makeup

Usage rate	235	gpm
Raw water unit cost	0.06	$/kgal
CT MU water cost	0.78	*$/hr*
	6	$k/yr

Demineralized water for feedwater makeup

Usage rate	12,772	gal/hr
Raw water unit cost	0.06	$/kgal
Demineralization unit cost	1.45	$/kgal
Demin water cost	19.16	$/hr
	154	*$k/yr*

Electricity

Usage rate	13,200	kWhr/hr
Elect unit cost	0.05	$/Kwhr
	660	$/hr
	5,319	*$k/yr*

Catalysts and chemicals

Item	Usage	Rate	$/Unit	Units	$/hr	k$/yr
Enzyme	6960	GPD	2	Liter	2195	17688
Sulfuric Acid	5	TPD	75	Ton	16	126
Glucose Syrup	5	TPD	0.08	Lb	33	269
Denaturant	1612	GPD	0.65	Gal	44	352
Pkgd Boiler Fuel Oil	114	MBTU/HR	3	MBTU	328	2646
Misc.	8760	Hrs	50	Hrs	50	438
				Total	2666	21518

Total consumables 27,007 *$k/yr*

Other Variable O&M Costs

Credit for Lignin (stillage) Byproduct Sales (for fuel)

Production Rate	25.56	tons/hr
Sales Price	12.00	$/ton
Credit	307	*$/hr*

SUMMARY OF VARIABLE O&M	$k/yr	$/hr
Consumables	27,007	3,347
Other Variable O&M Costs	(2,472)	(307)
Total variable O&M	24,535	3,040

INTEGRATED BGCC-ETHANOL PLANT

O&M COST SUMMARY EXCLUDING BIOMASS COST

ACCT DESCRIPTION			
TOTAL O&M	27090	k$/yr	Based on Capacity Factor of 92 %
FIXED O&M	6,599	k$/yr	
Fixed mat'l O&M	2,605	k$/yr	
Fixed labor O&M	3,994	k$/yr	
VARIABLE O&M	20,491	k$/yr	2.065 $/MBtu HHV
Variable labor O&M	106	k$/yr	
Variable mat'l O&M	20,385	k$/yr	

Basis for calculation of O&M costs:

Plant Capital Cost	190	M$
Biomass heat input	1,231	10^6 Btu/hr HHV basis
Capacity factor	92	% (BGCC CF on biomass is 85%; GT fired with No.2 oil for 613.2 hrs)
Annual operation	8,059	hrs per year at full load
Operating labor rate	20.00	$/hr (salary)
Staff maint labor rate	15.00	$/hr (salary)
Labor Supervision	30	% of labor
Overhea	30	% of labor & supervision
Contract labor rate	49.50	$/hr
Contract Supervision	10	% of contract labor

FIXED O&M

Operating staff	10.25	# workers at site per shift (4 shifts)
Truck Unloading	40	Hours per week
Wood Pile	2	# workers managing wood pile per shift
.Gasifier	1	# workers operating gasifier per shift
Cntrl Rm Ops-BGCC	2	# workers in BGCC control room per shift
Roving Ops - BGCC	1	# operators roving BGCC plant per shift
Cntrl Rm Ops-EtOH	1	# workers in EtOH control room per shift
Roving Ops - EtOH	3	# operators roving EtOH plant per shift
Operating labor cost	1,706	k$/yr [10.25 x 2080 hr/yr x 4 shifts x 20 $/hr /1000]
Supervision	512	k$/yr [30/100 x operating labor cost]
Labor overhead	665	k$/yr [30/100 x (operating + supervision costs)]
Total operating labor cost	2,882	$k/yr [total of labor cost, supervision, and overhead]

Maintenance staff	9	# workers at site (1 shift only)
Maint labor cost	281	$k/yr [9 x 2080 hr/yr x 15 $/hr / 1000]
Supervision	84	$k/yr [30 /100 x maintenance labor cost]
Labor overhead	110	$k/yr [30 /100 x (maint labor + supervision)]
Total fixed maint labor cost	475	$k/yr [total of labor cost, supervision, and overhead]

Maintenance materials and contract labor

Major equipment maintenance	Period months	Materials $ k	Contract Labor hours	Contract Labor $ k	Average Cost Materials $ k/yr	Average Cost Labor $ k/yr	note
Gasifier Package	12	1,005	8,000	436	1,005	436	1
HRSG	12	50	0	0	50	0	
Stm turbine - major	60	0	0	0	0	0	
Stm turbine - minor	18	0	0	0	0	0	
Ethanol Plant	12	1,300	3,700	201	1,300	201	
B.O.P. - major	60	0	0	0	0	0	
B.O.P. - minor	12	250	0	0	250	0	
					2,605	637	
Annual fixed maintenance	1.96	% of plant capital cost of $190 million			Note 2		

1 Contract labor is calculated as hours (plus supervision) times contract labor rate. Totals per maintenance cycle are divided by (period in months/12).

2 Includes permanent plant maintenance staff labor cost

SUMMARY OF FIXED O&M	$k/yr
Operating labor	2,882
Maintenance labor	475
Contract labor	637
Maintenance materials	2,605
Total fixed O&M materials	2,605
Total fixed O&M labor	3,994

Note: Shaded cells are for spreadsheet inputs; clear cells are calculated

VARIABLE O&M

Consumables

Process water

Usage rate	21,800	gal/hr
Unit cost	0.06	$/kgal
Process water cost	1.20	$/hr
	10	$k/yr

Cooling system makeup

Usage rate	265	gpm
Raw water unit cost	0.06	$/kgal
Raw water cost	0.87	$/hr
	7	$k/yr

Demineralized water for feedwater makeup

Usage rate	12,772	gal/hr
Raw water unit cost	0.06	$/kgal
Demineralization unit cost	1.45	$/kgal
Demin water cost	19.16	$/hr
	154	$k/yr

Catalysts and chemicals

Item	Usage	Rate	$/Unit	Units	$/hr	k$/yr
Dolomite	0.21	TPH	25	Tons	5	42
Continuous N2	3.1	TPH	25	Tons	79	633
Liquid N2	72	TPY	150	Tons	1	11
Aqueous NH3	315	PPH	175	Tons	28	74
SCR Catalyst	1	Lot	75,000	Lot	9	75
Enzyme	6960	GPD	2	Liter	2187	17622
Sulfuric Acid	5	TPD	75	Ton	16	126
Glucose Syrup	5	TPD	0.08	Lb	33	269
Denaturant	1612	GPD	0.65	Gal	44	352
Pkgd Boiler Fuel Oil	0	MBTU/Hr	2.86	MBTU	0	0
Misc.	8760	Hrs	50	Hrs	50	438
				Total	2450	19641

Total consumables 19,813 $k/yr

Other Variable O&M Costs

Ash Disposal

Production Rate	2.3	tons/hr
Disposal Cost	12.00	$/ton
	28	$/hr

Incremental Maintenance on Combustion Turbine

Number of CT's: 1

Cost of Maintenance and Overhauls per CT

CT Combustion Inspection	500	contract labor hours per inspection
Contract labor/inspection	27	k$ [labor hrs x $49.50/hr x (1 + 10/100)]
Mat'ls cost per inspection	125	k$
Time between inspections	8,000	hrs
Incremental material cost	15.63	$/hr per CT, materials
Incremental labor cost	3.40	$/hr per CT [labor hrs x $49.50/hr x (1+10/100)]

CT Hot Section Inspection	1,925	contract labor hours per inspection
Contract labor cost	105	k$ [labor hrs x $49.50/hr x (1 + 10/100)]
Mat'ls cost per inspection	72	k$
Time between inspections	24,000	hrs
Incremental material cost	3.00	$/hr per CT, materials
Incremental labor cost	4.37	$/hr per CT [labor hrs x $49.50/hr x (1+10/100)]

CT Major Inspection	3,520	contract labor hours per inspection
Contract labor cost	192	k$ [labor hrs x $49.50/hr x (1 + 10/100)]
Mat'ls cost per inspection	895	k$
Time between inspections	36,000	hrs
Incremental material cost	24.86	$/hr per CT, materials
Incremental labor cost	5.32	$/hr per CT [labor hrs x $49.50/hr x (1+10/100)]

Total incremental mat'l cost	43.49	$/hr [total of above materials x number of CT's]
Total incremental labor cost	13.09	$/hr [total of above labor x number of CT's]

SUMMARY OF VARIABLE O&M	$k/yr	$/hr
Consumables	19,813	2,472
Other Variable O&M Costs	222	28
CT Maintenance materials	350	43
Total variable O&M material	20,385	2,543
Total variable O&M labor	106	13

BASE CASE (MODIFIED BARK BOILER)

O&M COST SUMMARY EXCLUDING BIOMASS COST

ACCT DESCRIPTION				
TOTAL O&M	1903	k$/yr	Based on Capacity Factor of 92 %	
FIXED O&M	1,711	k$/yr		
Fixed mat'l O&M	500	k$/yr		
Fixed labor O&M	1,211	k$/yr		
VARIABLE O&M	192	k$/yr	0.070	$/MBtu HHV

Basis for calculation of O&M costs:

Full load heat input	340	Biomass 10^6 Btu/hr HHV basis
Capacity factor	92	%
Annual operation	8,059	hrs per year at full load
Operating labor rate	20.00	$/hr (salary)
Staff maint labor rate	15.00	$/hr (salary)
Labor Supervision	30	% of labor
Overhead	30	% of labor & supervision
Contract labor rate	49.50	$/hr
Contract Supervision	10	% of contract labor

FIXED O&M

Operating staff	3.25	# workers at site per shift (4 shifts)
Truck Unloading	40	Hours per week
Wood Pile	1	# workers managing wood pile per shift
Cntrl Rm Ops	1	# workers in BGCC control room per shift
Roving Ops	1	# operators roving BGCC plant per shift
Operating labor cost	541	k$/yr [3.25 x 2080 hr/yr x 4 shifts x 20 $/hr /1000]
Supervision	162	k$/yr [30/100 x operating labor cost]
Labor overhead	211	k$/yr [30/100 x (operating + supervision costs)]
Total operating labor cost	*914*	$k/yr [total of labor cost, supervision, and overhead]
Maintenance staff	2	# workers at site (1 shift only)
Maint labor cost	47	$k/yr [*2* x 2080 hr/yr x *15* $/hr / 1000]
Supervision	14	$k/yr [*30* /100 x maintenance labor cost]
Labor overhead	18	$k/yr [*30* /100 x (maint labor + supervision)]
Total fixed maint labor cost	*79*	$k/yr [total of labor cost, supervision, and overhead]

Maintenance materials and contract labor

Major equipment maintenance	Period months	Materials $ k	Contract Labor hours	Contract Labor $ k	Average Cost Materials $ k/yr	Average Cost Labor $ k/yr	
Boiler	12	500	4,000	218	500	218	note 1
					500	*218*	

1 Contract labor is calculated as hours (plus supervision) times contract labor rate. Totals per maintenance cycle are divided by (period in months/12)

SUMMARY OF FIXED O&M	$k/yr
Operating labor	*914*
Maintenance labor	*79*
Contract labor	*218*
Maintenance materials	*500*
Total fixed O&M materials	*500*
Total fixed O&M labor	*1,211*

Note: Shaded cells are for spreadsheet inputs; clear cells are calculated

VARIABLE O&M

Consumables

Process water

Usage rate	0	gal/hr
Unit cost	0.06	$/kgal
Process water cost	*0.00*	*$/hr*
	0	$k/yr

Cooling system makeup

Usage rate	0	gpm
Raw water unit cost	0.06	$/kgal
Raw water cost	*0.00*	*$/hr*
	0	$k/yr

Demineralized water for feedwater makeup

Usage rate	240	gal/hr
Raw water unit cost	0.06	$/kgal
Demineralization unit cost	1.45	$/kgal
Demin water cost	*0.36*	$/hr
	3	*$k/yr*

Catalysts and chemicals

Item	Usage	Rate	$/Unit	Units	$/hr	k$/yr
Misc.	8760	Hrs	5	Hrs	5	44

Total consumables	*47*	*$k/yr*

Other Variable O&M Costs

Ash Disposal

Production Rate	1.5	tons/hr
Disposal Cost	12.00	$/ton
	18	*$/hr*

SUMMARY OF VARIABLE O&M	$k/yr	$/hr
Consumables	47	5.36
Other Variable O&M Costs	145	18.00
Total variable O&M material	192	23

2.8 Project Schedule

Figure 2-35 presents the proposed schedule for implementing a BGCC cogeneration plant at the New Bern Mill. The schedule allows 9 to 12 months for the gasification technology supplier to test the specific New Bern biomass feed and develop a process design for the gasification island

Consistent with Weyerhaeuser practice, a $\pm$ 10 percent project cost estimate must be completed in order to request corporate funding for the project.

Authorization to proceed with procurement and construction could be received as early as September, 1996.

The in-service date for the project is February 3, 1999.

For the ethanol plant several process design issues must be resolved regarding agitation requirements and stillage (lignin) dewatering before the technology is ready for large-scale demonstration. Consequently, additional time will be required before the ethanol process will be ready for specific feedstock testing and preparation of the process design package. However, once these issues are resolved the overall duration of the engineering/procurement and construction schedule should be similar to that of the BGCC plant (i.e., about three years).

BGCC PROJECT SCHEDULE

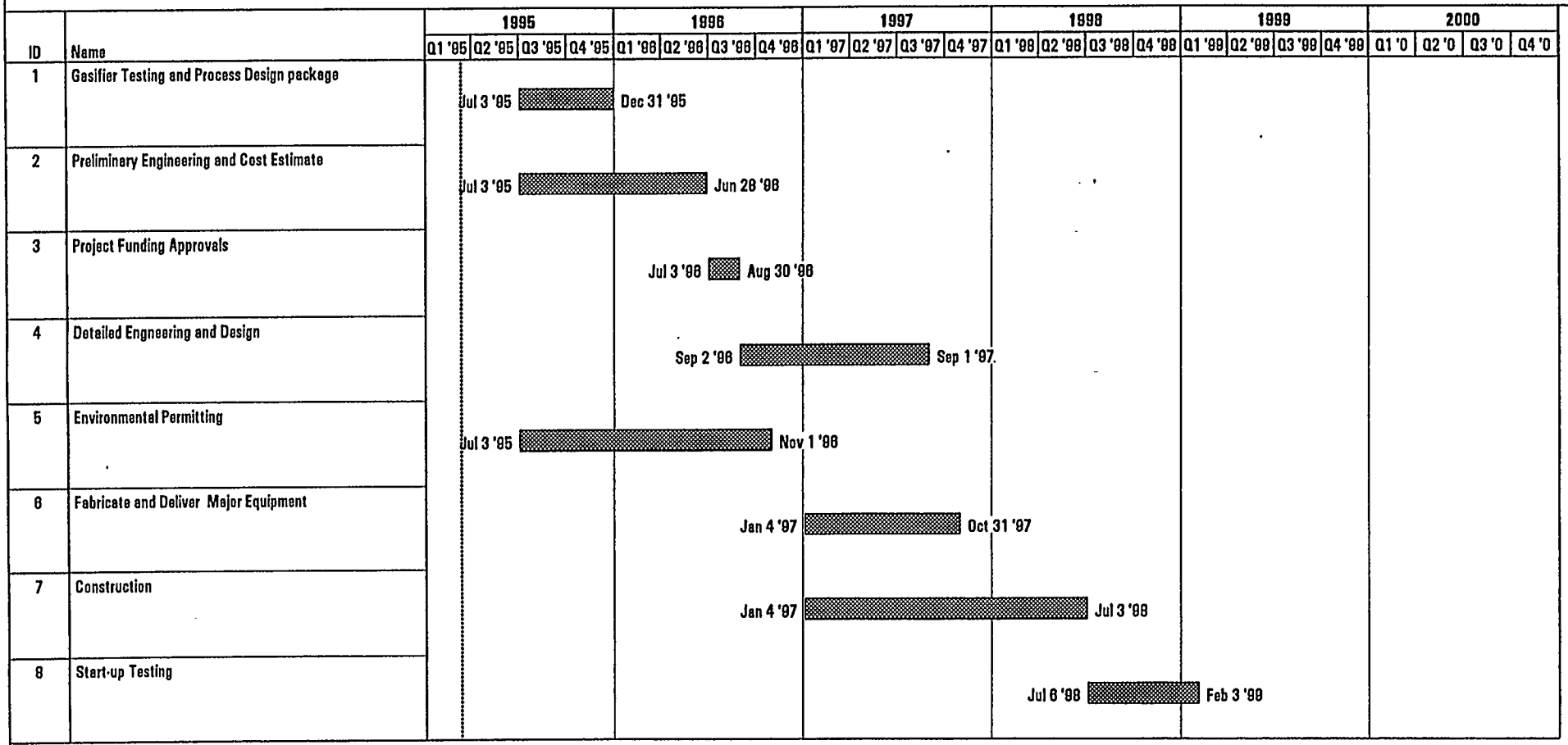

Figure 2-35
BGCC Project Schedule

Critical
Noncritical
Progress
Milestone
Summary
Rolled Up

3/9/95

Section 3

Regional Biomass Supply System

3.1 Scope and Objectives

The objectives of this task included developing a description of the fuel supply and fuel costs for the BGCC and ethanol plants. To address both existing and potential supplies, six strategies were developed to account for alternative sources, future costs, and environmental benefits. The strategies have been developed sufficiently to address real costs and benefits, in dollars, fuel supply, and sustainable forest management practices.

3.2 Findings

There is sufficient biomass fuel available from the feedstock system surrounding New Bern to satisfy the range of feedstock needs of the various BGCC and ethanol alternatives considered in this study (294,700 bone dry tons (BDT)/year to 350,000 BDT/year) at an average cost of $20 to $24/BDT. This biomass is made up of Weyerhaeuser mill residuals and woods residuals from the final harvest of natural stands and is all within a 60 mile transportation radius of New Bern. Residual resources are presented in Figure 3-1 and Figure 3-2. A requirement of 600,000 BDT raises the average cost to $26/BDT, increases the transportation distance to about 80 miles and adds residuals from Plymouth wood products, plantations, and non-Weyerhaeuser mills. A requirement of 900,000 BDT is available and it raises the average cost to $28/BDT, increases the transportation distance to 100 miles and adds residuals to each of the above components (Figures 3-2 and 3-3).

The predominant residual component available to New Bern is that available from final harvest as it accounts for more than 65 percent of the more than 900,000 BDT available. The least cost and most readily committed components are the residuals available from the New Bern sawmill, pulp mill and chip mill and these amount to 120,000 BDT (see Table 3-1). If poultry-house residuals can be utilized, average costs can be reduced significantly (by $3 to $4/BDT).

3.3 Approach

Availability and costs for volume from Weyerhaeuser forests and facilities were obtained from historical records and knowledgeable people in the company who have the responsibility for managing the forests and supplying the raw material for the mills. Information on plantation growth and economics was backed up by strategic planners and researchers who utilized computer runs on Weyerhaeuser's proprietary financial models. These models rely on extensive information collected and verified over many years on volume, growth and field operations. Estimates for items such as harvesting, collecting, transporting, site prepping, and planning were based on data from actual experience modified for the specific situation. Cost, volume, and growth estimates were generally modified towards optimism in an attempt to include a particular component such as biomass from plantations or from short rotation forestry. However, when it was apparent that inclusion of the component was not feasible, conservative estimates (those tending to reduce the quantity) were used to identify the quantity actually available for use in an energy facility (Tables 3-1 through 3-7, Figures 3-1 through 3-5.)

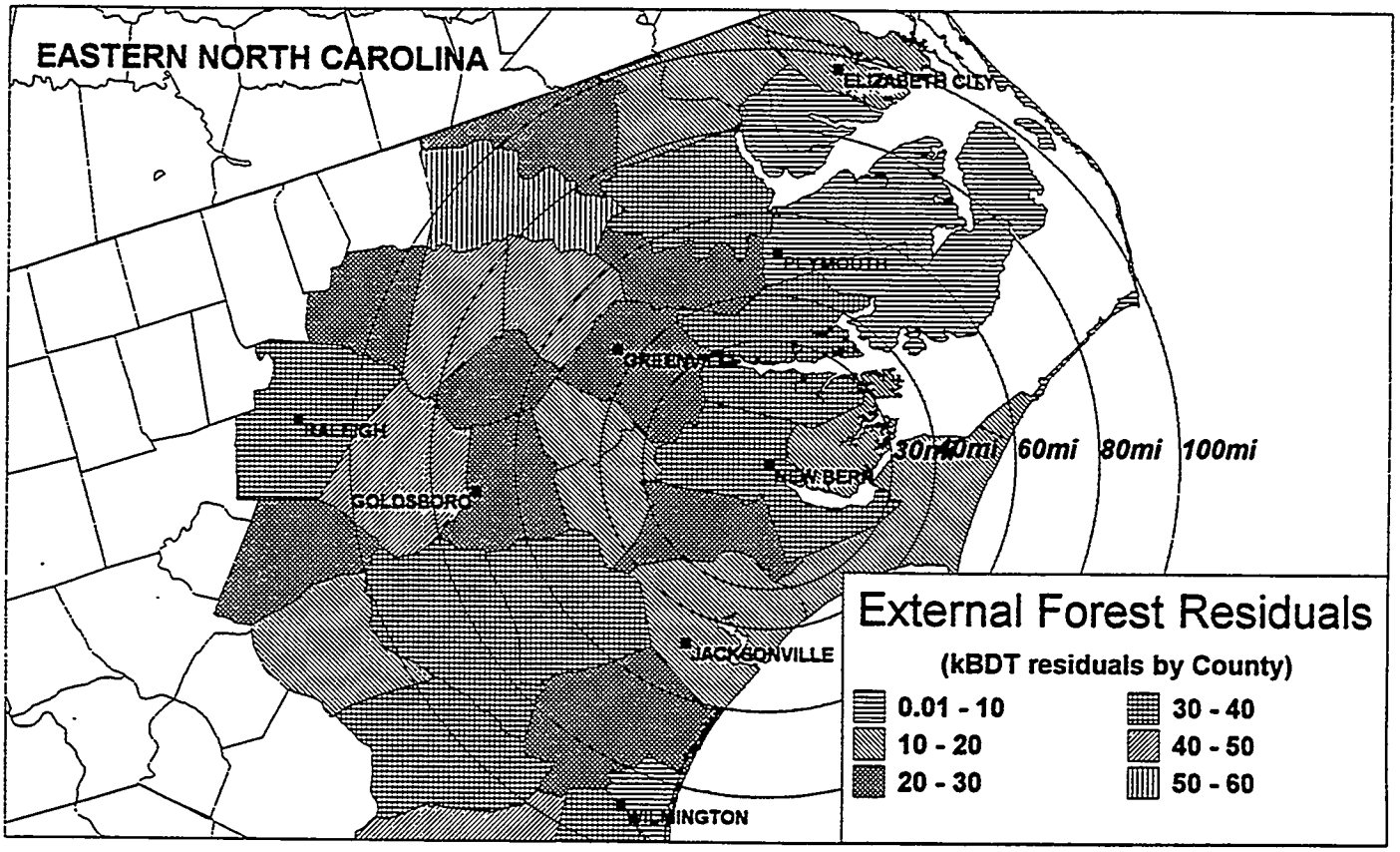

Figure 3-1: Map of External Forest Residuals

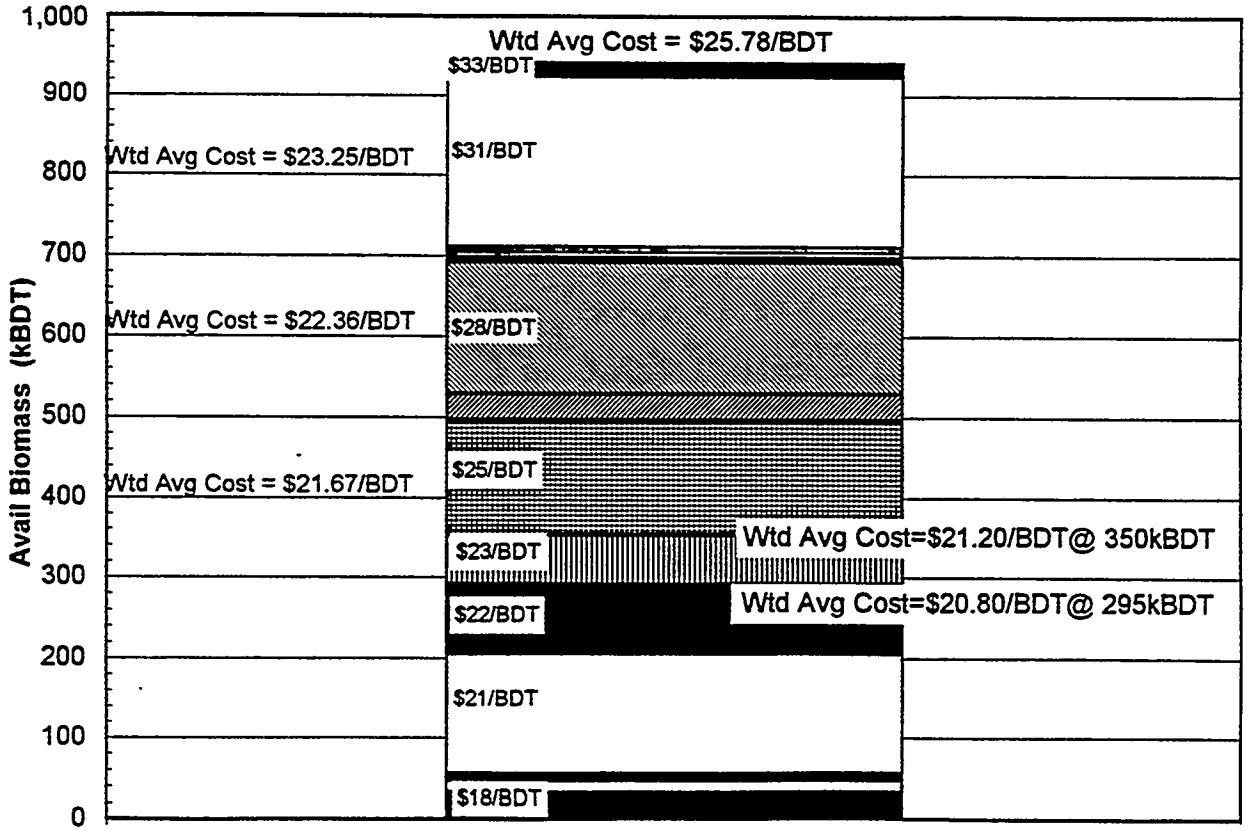

Figure 3-2: Chart of Residual Biomass Fuel Resource

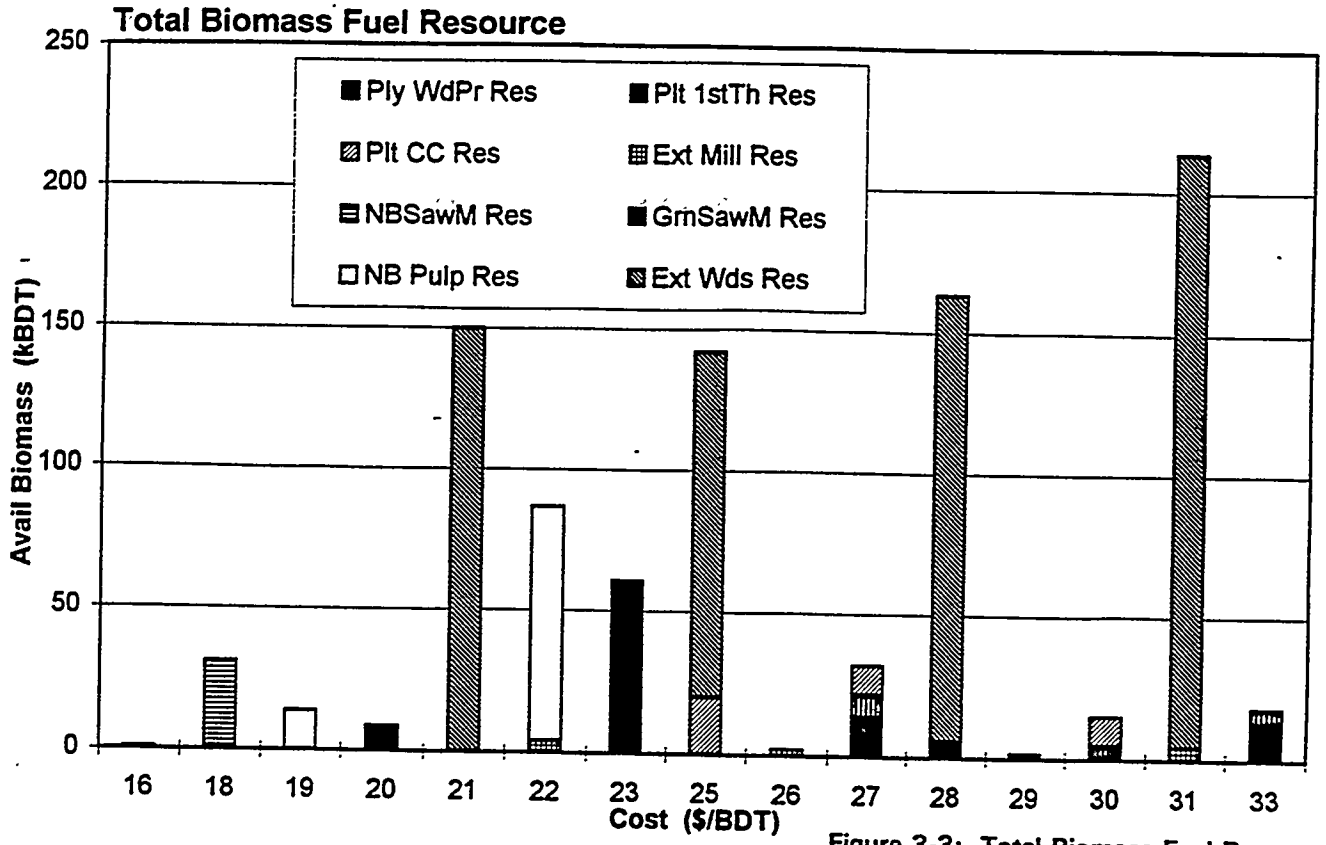

Figure 3-3: Total Biomass Fuel Resource

Table 3-1: Total Biomass Fuel Resource - Units - BDT per year

Fuel Cost* ($/BDT)	Weyerhaeuser Operations						Non-Weyerhaeuser Operations		Total Res. Fuel	Accm. Res. Fuel
	Plantation Residuals		Mill Residuals							
	Clear Cut	First Thinning	New Bern Sawmill	New Bern Pulp Mill	Greenville Sawmill	Plymouth Wd Prod	Woods Residuals	Mill Residuals		
16			1						1	1
18			31						31	32
19				14					14	46
20					9		92		101	147
22				83			58	4	15	292
23					61				61	353
25	20						122		142	495
27	10	8				14		2	34	529
28						6	157		163	692
30	10	5						2	17	709
31							209		209	918
33		5						5	10	928
34						13			13	941
Source Total	40	18	32	97	70	33	638	13	941	

*Delivered to New Bern

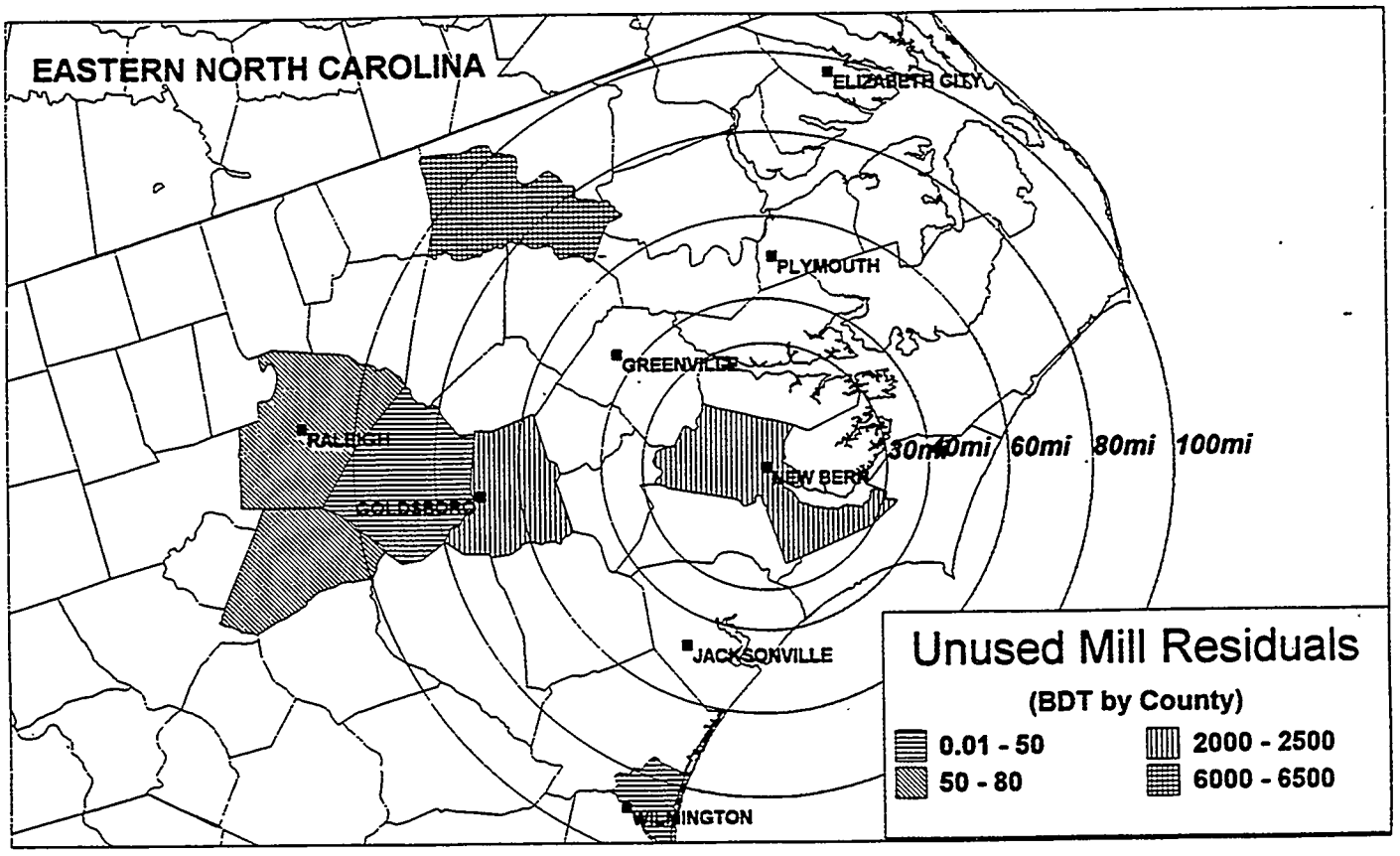

Figure 3-4: Map of Unused Mill Residuals

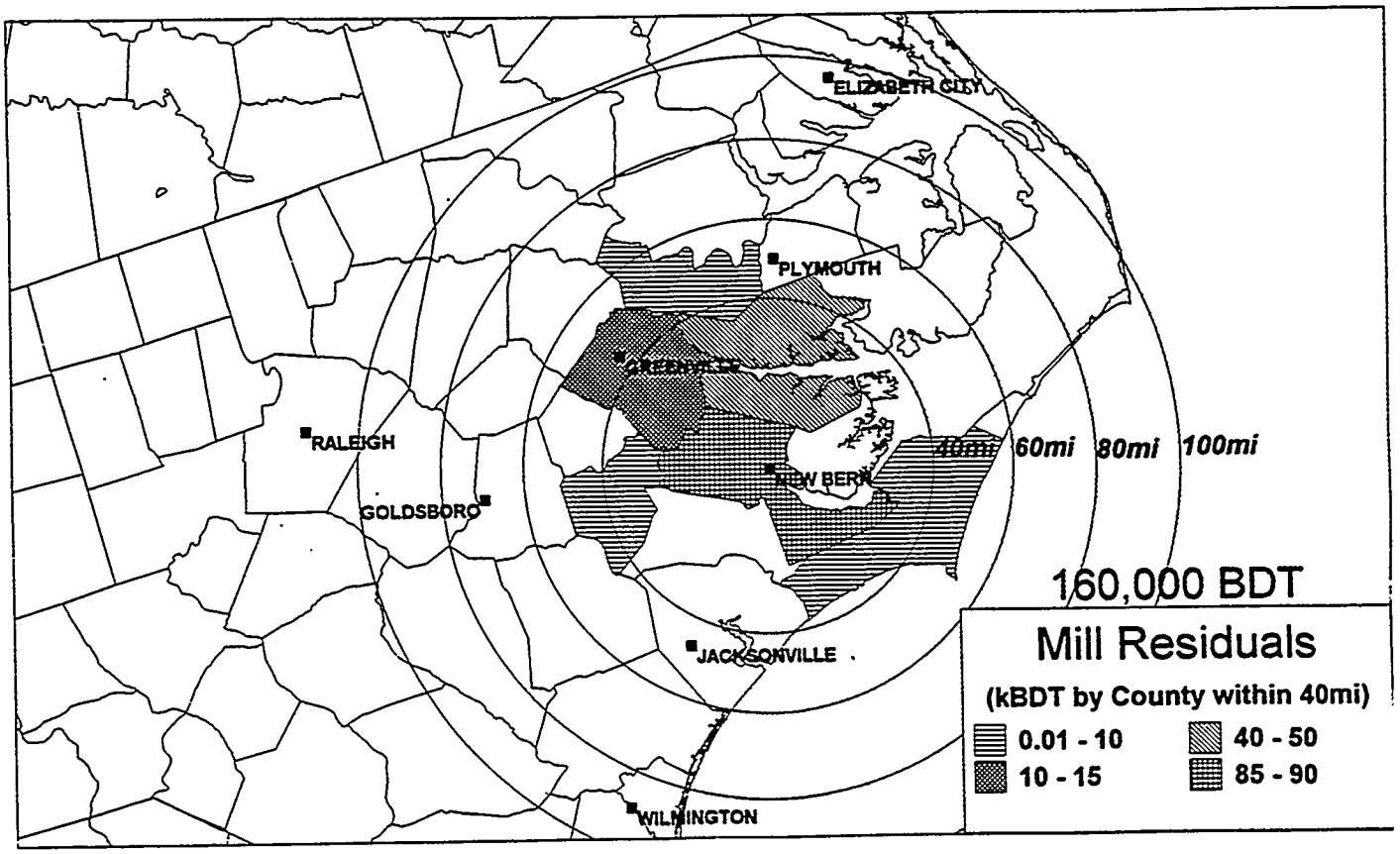

Figure 3-5: Map of Total Mill Residuals

29782.B03
395

Data for residual material available from external sources was obtained primarily from resource bulletins published by the Southeastern Forest Experiment Station, United States Department of Agriculture (Resource Bulletins SE-111, SE-113, SF-120, and SE-142). The Forest Experiment Station researchers and writers of the bulletins (in particular Tony Johnson) were especially helpful in interpreting the data in the bulletins and in making a special run to collate the mill residual data on a county by county basis. The quantity in each country was roughly proportioned on the basis of each county's map area within mileage circles around New Bern.

The forest residue quantity available from lands not owned by Weyerhaeuser was determined on a county-by-county basis and then allocated to mileage circles as discussed above. A recoverable residual biomass to merchantable growing stock ratio was determined on a full state basis since this was the lowest level that individual biomass component information was available (Resource Bulletin SE-142). This ratio was then applied to the merchantable growing stock for each county (from Resource Bulletins SE-111 and SE-113) to determine the recoverable residual by county (see Figure 3-1). In addition, several Weyerhaeuser people knowledgeable about raw materials assessed the quantity information on each component of forest biomass from the bulletin and estimated the amount of each component that would be recoverable and the portion of forests that would be accessible. This was compared with Weyerhaeuser experience and found to be conservatively low.

The data on residual material available from wood product facilities was examined in great detail and in several different ways. In the final analysis the primary data source for both the quantity generated and the disposal options was again the Southeastern Forest Experiment Station (SFES) bulletins. The amount available (unused mill residuals) by county was proportioned on a mileage circle basis as discussed above (see Figure 3-4 and Figure 3-5).

The bulletins contain information on mill residuals from mill surveys conducted every two years on all wood product facilities in the state. These surveys develop data on the quantity and form of residuals generated and their disposal and use. Initially it appeared there might be more residual material available for use than what the bulletins identified as unused. This led to an independent evaluation on specific mill usage supported by information supplied by the TVA Southeastern Regional Biomass office. This data included 118 specific industrial facilities in North Carolina that utilize some form of biomass. The data was screened for wood-residue users within 150 miles of New Bern and compared against the material generated. After deducting the quantity used from that generated and reviewing this quantity with local residual purchasers and comparing it with the SFES bulletin information, there appeared to be an inordinate amount available. The disparity was attributed to changes over the 10 years since the TVA data was developed. Wood-residue usage had increased as poultry bedding, mulch, fuel, furnish, and for pulp, paper, and particle/strandboard.

With the above information, six potential strategies were evaluated as possible approaches for supplying the needed biomass for the projects. These strategies are summarized below.

3.4 Strategy #1 - Capture existing volumes of residuals available to Weyerhaeuser that are available at hog fuel (or lower) values.

Weyerhaeuser Mill Residuals

Weyerhaeuser processes predominantly pine into bleached market pulp and lumber at the New Bern, Greenville and Plymouth locations. The New Bern wood yard also debarks and chips 200,000 BDT per year of hardwood of which a small portion (21,000 BDT) is used internally for pulp. The major portion

of the chips are sold for local mill use and for export. These operations also generate residuals that cannot currently be used for the final product of these facilities and is now being sold to non-company users as fuel.

New Bern pulp, New Bern sawmill, and Greenville sawmill generate almost 200,000 BDT per year of bark, sawdust, screenings and hogged waste wood at values of $10 to $20/BDT, FOB generating plant. Greenville furnishes about 70,000 BDT of residual material which has an incremental handling and transportation cost of $7 to $10/BDT (see Table 3-2). At the present time most of this material is sold to Craven Hydraco, a private electricity generating facility utilizing wood residuals, with some small portion going to the Plymouth wood waste boiler on a supplemental basis.

Table 3-2: Weyerhaeuser Mill Residuals

Fuel Cost* ($/BDT)	Mill Residuals (kBDT)			
	New Bern Sawmill	New Bern Pulp Mill	Greenville Sawmill	Plymouth Wood Products
16	1			
18	31			
19	-	14		
20			9	
22		83		
23			61	
27				14
28				6
34				13
Total	**32**	**97**	**70**	**33**

*Delivered to New Bern

An additional 33,000 BDT of residual material is available from the Plymouth plywood and sawmill facilities at a value of $16 to $25/BDT, and having an incremental transportation cost of $9 to $11/BDT (Table 3-2).

The wood products facilities at New Bern and Greenville also generate about 10,000 BDT of dry planer shavings. This material was not included as a source for fuel because of its very high value ($34/BDT) as poultry bedding and furnish for engineered panels.

The obvious benefit of using the mill residuals as fuel is the large volume of low value material already owned by Weyerhaeuser, and in the case of New Bern, that is already on site. The handling costs are the only incremental costs and the existing value is what other people are willing to pay for fuel less transportation cost. Craven Hydraco has communicated their intent to substantially reduce their use of Weyerhaeuser mill residuals as they convert to a source of shipped cross ties. This reduction could leave the New Bern residual fuel without a viable market. Using this source of material for a new New Bern power plant provides a dedicated Weyerhaeuser supplier/consumer; a reliable flow of fuel; an opportunity

to reduce current handling, marketing, and disposal costs; and the opportunity to add value to existing products.

Weyerhaeuser Log Storage Yard Waste

Before processing logs for mill usage many small logs are broken and accompanying limbs, chunks, and bark are removed during the storage and handling of logs. In the past, because of a fairly high level of dirt and rocks, this material was collected and hauled to landfill for disposal. However in 1994 approximately 2000 BDT of this material from the New Bern and Greenville sawmills was collected, ground and sold as fuel for energy. If the fuel facility being considered has the capability to handle the higher level of dirt and rocks, this component would add about 1400 BDT/year at $19 to $22/BDT and about 2500 BDT/year at $26 to $30/BDT. This was not included in the following summaries.

Non-Weyerhaeuser Plant Residuals

Based on the mill surveys conducted by the Southeast Forest Experiment Station, only 88,000 BDT (1.8 percent of total mill residuals) of the mill residue generated in North Carolina in 1989 was not used. This was reduced even further to only 62,000 BDT (1.4 percent of total mill residual) in 1991. In 1989, based on a breakdown of this survey data by counties, about 18,000 BDT was unused within a 100 mile radius of New Bern and 50 percent of that was more than 60 miles away from New Bern. Although the 1991 data was not available by county, if it is assumed that the unused residuals distribution was the same as in 1989, there would have been only 13,000 BDT available within 100 miles in 1991 (Table 3-3 and Figure 3-4). Because of proximity to New Bern and the associated lower transportation costs, there is a high probability that some portion of the 433,000 BDTs of mill residuals within a 40 mile radius currently being utilized by others would be available to a New Bern facility (Figure 3-5). Because of the speculative nature of the quantity and cost of this material it has not been included in any of the tables, however as a facility comes on stream, this component could help increase the locally available material and reduce the subsequent cost. Continued efficiency improvements in wood product plants and increases in residual uses will reduce somewhat the amount available from this resource in the 1998 and beyond time frame.

Table 3-3: Unused External Mill Residuals

Distance from New Bern (miles)	30	40	60	80	100
Unused mill resid. (kBDT/year)	3.2	0.8	2.2	1.8	4.6
Cost at mill ($/BDT)	18	18	18	18	18
Transportation Cost ($/BDT)	4	4	8	11	15
Total Cost ($/BDT)	22	22	26	29	33

Poultry House Waste

Dry planer shavings from Weyerhaeuser and other sawmills are being purchased at a high value ($30 to $34/BDT) and utilized as bedding material in the burgeoning North Carolina poultry business. After use, the material is reclaimed from the poultry houses and some of it is spread on farm fields as mulch and fertilizer. One of the larger users, Goldsboro Milling, uses approximately 90,000 tons of shavings annually to which the poultry adds about 25,000 tons. Today there is a cost to Goldsboro Milling to reclaim,load, haul and spread the material in the fields as well as a problem with winter time disposals when the fields are too wet to spread. Goldsboro is very interested in alternative disposals and it was assumed that this material would be available for the cost of transportation or $8 to $12/BDT. Since it

was not known if the fuel facility could handle this material it was not included in the following summaries. However if 110,000 BDT could be delivered for $12/BDT the weighted average cost for the amount of feedstock required to fuel the facilities discussed in this study would be lowered to $17 - 20/ BDT.

Summary Strategy #1:

Mill residuals from Weyerhaeuser mills are an obvious first choice for fuel as they are readily available, can be committed to internal use, and for the most part, are the lowest cost (Table 3-4). Unused residuals from external mills are not a significant quantity (Table 3-4), but with a closer facility some local mills would probably sell to Weyerhaeuser instead of transporting their residuals a longer distance. The use of poultry house residuals could reduce the average cost of fuel significantly.

Table 3-4: All Mill Residuals (kBDT/year)

Fuel Cost ($/BDT)	Dist. from N.B. (miles)	Weyerhaeuser Mill Residuals				Non-Wey. Mill Residuals	Total Mill Residual	Accm. Mill Residual
		New Bern Sawmill	New Bern Pulp Mill	Greenville Sawmill	Plymouth Wd Prod			
16	0	1					1	1
18	0	31					31	32
19	0		14				14	46
20	50			9			9	55
22	0		83			4	87	142
23	50			61			61	203
27	40; Ply (60)				14	2	16	219
28	60				6		6	225
30	60					2	2	227
33	80					5	5	232
34	60				13		13	245
Source Total		**32**	**97**	**70**	**33**	**13**	**245**	

3.5 Strategy #2 - Incorporate mill residuals that currently are going to landfill or lagoon disposal sites at a net cost and potential liability to the Company.

New Bern Pulp currently sends sludge (23,850 wet tons) to an old landfill as 10-15 percent solids at about a $4.00/ton handling cost (est.). New landfill space would have a much higher cost. Probability of permitting additional landfill construction beyond the current space is difficult and would require significant capital.

The landfill and the treatment lagoons at New Bern have many tons of material that could be recovered as a fuel source. The lagoons may have to be dredged in the near future with expensive disposal alternatives. Combustion under controlled temperature is a potential remediation process. Plymouth has a system in place to dry dredged sludge for burning, but does not have the capacity to dry and burn all their lagoon sludge if further cleanout is required. A system designed with the temperature requirements of sludge burning at New Bern could be a desirable home for this material. The mill residuals included in this discussion are generally not net contributors to an energy balance due to their high moisture levels (85 percent to 90 percent moisture content). However, the use by the energy facility would have a significant benefit to the mill site in the form of reduced operating cost for disposal. There may be qualities that discourage their use as a fuel source. Use in an energy system would capture some benefit from materials that are currently direct costs. Landfill or lagoon storage have been low cost options, but creation of new space will continue to increase in cost with significant regulatory barriers that may prevent long term continuation without changes and significant costs. Thermal conversion in a gasifier or combustion system may become an attractive alternative.

Summary Strategy #2:

Requires suitable drying technology, regulatory driven, some risk, and not a significant Btu source.

3.6 Strategy #3 - Capture existing and/or potential woods residual chips from final harvest and plantation thinning, that are available at hog fuel prices plus transportation.

Non-Weyerhaeuser Forest Residuals

Recovery of forest logging residuals at the time of final harvest for roundwood is already a significant and reliable source of biomass fuel for the Weyerhaeuser wood residue boilers in Plymouth. Its contribution has ranged from 10 percent to 35 percent of the Plymouth wood fuel source over the last six years. Although higher in cost than the mill residual increment by $4 to $7/BDT it is available in significant quantities within a 100 mile hauling distance of New Bern.

Every four to six years the South Eastern Forest Experiment Station of the U.S. Forest Service conducts a survey of the North Carolina standing forest inventory and of operational logging sites. Based on the 1989 survey, 8 percent of the merchantable growing stock (6 percent softwood, 10 percent hardwood) in harvested areas is left in the woods as logging residue. In addition unmerchantable material, composed primarily of small stems, 1-inch to 5-inch diameter at breast height (dbh), and tops and limbs, but with a portion of salvageable dead trees, rough trees, and partially rotten trees, is not currently recovered. The total unmerchantable material is an increment about 25 percent greater than the merchantable growing stock for softwood and about 55 percent greater than the merchantable growing stock for hardwood.

After several knowledgeable people assessed each unmerchantable component for recoverability, it was determined that approximately 40 percent of the unmerchantable pine and 35 percent of the unmerchantable hardwood would be recoverable from those stands selected for residual harvest. It was also assumed that residual recovery would not be attempted on 50 percent of the stands due to small stand size, inaccessibility, operability constraints, low volume per acre, and a future shift from natural stands to more plantations for Weyerhaeuser and other large forest products companies. The increment to the merchantable growing stock removal amounts to 16 percent (about 7 BDT/acre) for softwood and 31 percent (about 13 BDT/acre) for hardwood. Residual availability was determined for each county and then each county was proportioned on the basis of map area and portions assigned to specific mileage zones around New Bern (see Figure 3-5). Residual availability and costs were determined for mileage zones from 40 to 100 miles in 20 mile increments (see Table 3-5).

Table 3-5: Forest Residuals

Dist. from New Bern (miles)	30	40	60	80	100
Material Avail (BDT)	92	58	122	157	209
Recovery cost ($/BDT)	17	17	17	17	17
Transportation Cost ($/BDT)	4	4	8	11	15
Total Cost ($/BDT)	**21**	**21**	**25**	**28**	**31**

For more than 6 years Weyerhaeuser has experienced a residual recovery of 10 to 15 BDT/acre on natural pine stands, which is about 50 percent greater than the estimate above and should verify the assumption as conservative. Logging contractors have developed efficient systems for residual recovery over the more than six years of producing fuel for Weyerhaeuser and are now realizing incremental harvest costs which range from $14 to $18/BDT with transportation and handling costs an additional $8 to $12/BDT with hauling distances of 40 to 70 miles.

The lower costs of regeneration behind harvest operations utilizing a woods chipper to remove more biomass provides a competitive advantage for purchase of stumpage from some small private landowners. While this type of advantage may be difficult to assign a value to, as competition for timber increases, it may be the difference in being competitive for this timber stumpage.

Plantation Final Harvest

Merchantable volume from final harvest of plantations will continue to increase until about the year 2000 and then level off at that amount into the foreseeable future. Based on projected quantities of limbs and tops and the residual recovery results from early plantation harvests there appears to be 16 to 25 percent increment of residual biomass available for fuel. This is composed of non-merchantable, hardwood ingrowth, pine tops and large limbs, landing scraps, long butts and lily pads. With an identified need and improved values this could be increased slightly through the use of harvesting heads which could cut off the stem at or slightly below ground level. Assuming that 50 percent of the available material would be recoverable in 1998 and with improving technology and production efficiencies this would improve steadily to 70 percent by 2008. This would provide about 25,000 BDT of residuals for fuel in 1998 increasing to almost 80,000 BDT in 2008 as presented in Table 3-6.

Table 3-6: Final Harvest Biomass

Harvest Year	% Recovered	kBDT Produced
1,998	50%	26
1,999	52%	30
2,000	54%	26
2,001	56%	42
2,002	58%	49
2,003	60%	53
2,004	62%	57
2,005	64%	62
2,006	66%	67
2,007	68%	72
2,008	70%	77

First Thinning

Market conditions will dictate the stocking level of future plantations in North Carolina. Depending on the value of chips and fuel at first thinning in relation to the value of diameter at final harvest, there may be some options to increase chip and/or fuel harvest removals in the first thin. Projections do not favor losing final harvest diameter.

At the present time with New Bern pulp requiring high specific gravity material and much of the first thin material below the specification, a large quantity of first thinning material has been whole tree chipped in the woods and all of it sold as fuel. However higher expected future demand for chips from already planted plantations is expected to shift the existing first thinning activity from fuel production to pulp and paper chip production for export and domestic sales.

Although the total volume for fuel from this source will decrease, if these operations utilize woods chipping with flail debarking then about 5 tons/acre of flailed bark, limbs and tops can be recovered for fuel as a byproduct of the chips at a recovery (grind and load) cost of $15 to $20/BDT. This will provide about 20,000 BDT of residual fuel annually during the 1998 to 2006 time frame (see Table 3-7).

Table 3-7: First Thinning Biomass

Harvest Year	Biomass (kBDT)	
	20% Avail. Flail & Chip	Produced on 60% std
1,998	30	18
1,999	51	31
2,000	30	18
2,001	29	17
2,002	28	17
2,003	37	22
2,004	26	16
2,005	36	21
	10% Avail. Flail & Chip	Produced on 40% std
2,006	31	19
2,007	16	6
2,008	16	6

First thinning on already planted more heavily stocked plantations is expected to be completed by 2006 when the wider spacing and fewer trees of the new regime will start to be thinned and overall removal volume and residual volume will be significantly reduced. The new planting regime would only yield about 1 to 2 tons/acre of residuals from thinning and because of low volume (requires coverage of up to 24 acres for each truckload) could only be applied to the highest volume stands (assumed to be applicable to 40 percent of available stands), which would make it costly to recover. This would only provide 5,000 to 8,000 BDT per year (see Table 3-7).

Weyerhaeuser North Carolina timberlands operations is also considering an alternative to the woods chipping approach for first thinning in both time frames which removes the thinning material in roundwood log form from the forest and processes the stems at a chip plant. This would still recover the bark at the chip plant but since the chipping or grinding process would need to be brought to the woods specifically for the small increment of fuel from the limbs and tops (less than 1 ton/acre or more than 24 acres required per truckload) the costs would probably be prohibitive for either of the above plantation time frames.

Second Thinning Residuals

Cut to length harvesters will be utilized for second thinning and this process removes the limbs and tops and leaves them at the stump while recovering all of the stem to the terminal bud. Recovering these limbs and tops would be more difficult than first thinning or final harvest residual recovery because, in addition to being a very low volume (less than 1 BDT/acre), the harvest costs would be considerably higher since

they would have to be independently collected at the stump and transported to roadside. This would make the costs considerably higher ($5 - $7/BDT) than any of the alternative biomass fuel options and would also require incremental fertilization to offset the limbs and tops nutrient contribution.

Site Preparation Residuals

The initial V-shear operation produces a roll of biomass on each side of the blade even with a fairly clean logging job. This material consists of stump lillypads, non-merchantable stems, understory, and soil litter. After the V-shear pass for slash disposal behind clearcut harvest, a flail-type chipper on a Hydro-ax with a collection system (silage chopper concept), could be used to collect the residual biomass. However, there is a value in this material to the long term organic matter levels on mineral soils. In addition, there is a question about how much of this shearing will be done long term if the EPA/Corps continues their present direction. Given the regulatory risk, soil organic matter impact, harvesting cost, and other options, this should not rank very high on the list of biomass options.

Summary Strategy #3:

Though not the lowest cost, the woods-residual component from natural stand clear cuts is the largest single source of biomass for fuel identified in this study. Based on the conservative assumptions above it amounts to at least 600,000 BDT and based on Weyerhaeuser's experience of 10 to 15 BDT/acre could run as high as 900,000 BDT within a 100 mile radius of New Bern.

3.7 Strategy #4 - Grow biomass by maximizing pine volumes per acre without giving up solid wood values, and trying to hold costs to hog fuel values plus transportation.

Pine Inter-row Planting

The most cost effective (most tons of biomass produced) approach to increase available biomass would be to plant more trees, make more frequent thinning entries, leave more trees at each entry, lengthen the rotation and forego some diameter growth. An option to achieve this is to plant an additional row of pine between the rows of the existing current prescription and then remove all of the trees in the extra row plus some in the normal rows to reach the desired 200 trees per acre after thinning. If the final harvest values are assumed to be unaffected by this additional row even though current forest growth and financial models indicate that the smaller trees would be worth less, then the incremental site preparation cost must be offset by the value of the additional material removed in the thinning. In order to earn, for example, 8 percent real after tax on the additional site preparation and planting investment, the thinning material must have a value of $90/BDT if thinned at 14 years and $120/BDT if thinned at 10 years (refer to Table 3-8, Option 1). There is a possibility that the loss of value from having a smaller log (due to the heavier initial stocking) might be offset by a benefit from the smaller low value juvenile log core and smaller limbs/knots. If a higher final harvest stand value of about 10 percent is assumed then since the thinning provides a offsetting benefit the total required return for thinning and the resulting fuel value can be reduced by 50 percent (refer to Table 3-8, Option 2). This requires a high fuel value of $45 to $60/BDT. However, if 80 percent of the material is allocated to the higher value of chips (with an optimistically high chip price of $50/BDT) then the fuel would only need a value of $35 to $40/BDT for ages 14 to 12, respectively (see Table 3-8, Option 3).

Table 3-8: Inter-row Planting					
(450 and 800 trees/acre)					
Thin Age	10	11	12	13	14
Option 1: All merch and Residuals to fuel Required fuel Value ($/BDT)	120	100	95	90	90
Opiton 2: "Assumed" 10% Higher Final Stand Value Required fuel Value ($/BDT)	60	50	45	45	45
Option 3: Option 2 with 80% of bole to chips Required fuel Value ($/BDT)	85	50	40	35	35

The incremental costs of almost doubling the site preparation and planting costs for the current values of fuel or even optimistically high future values do not appear to be warranted for the harvest of fuel alone, however if chip prices for pulp and paper increase significantly (above $50/BDT) and if an increase in final harvest values can be validated then a higher planting level with subsequent thinning chips and fuel could be justified.

Early fertilization on responsive stands has been shown to provide the option to increase first thin removal at age 12 by 3 to 4 BDT and still leave larger diameters on crop trees. While this approach does not minimize DOS (unpruned, low value core), the combination of values from a single lift prune, chip harvest, and growing to a larger final diameter may be a net benefit.

Summary Strategy #4:

Biologically feasible, low volumes, high plantation establishment and carrying costs.

3.8 Strategy #5 - Grow maximum pine/hardwood biomass per acre trying to hold costs to hog fuel plus transportation.

Hardwood Sprouting Between Rows

The next increment of volume would come from a strategy that intentionally grew biomass fuel as opposed to using residuals from other processes. A low-investment approach within the existing solid-wood strategy could use the current 18 foot bed spacing to advantage. Most of the Weyerhaeuser sites have an understory component of red maple, pepperbush, sweetgum, bay, etc. that is not killed with the V-streaking for the 18 ft beds. This is heavier in natural stands, but plantations can have a significant component. With early thinning, more thinning entries, and wider row spacing, the understory is heavier. North Carolina has not used brush control like the rest of the South. However, brush control between rows might be needed to reduce competition with the pine, but would only be done if the competition level was severe. Energy harvest could replace a brush control on these sites. One of the options for this brush control would be a mechanical chopping or mowing which would replace part of the harvesting cost of an energy operation.

Seeding between the rows is an option, but most of the native species would have a high seed cost compared to planting. The plantation would then be fertilized, bedded and planted with weed control directly on the top of the bed. The materials between rows could be re-harvested just before second thinning or final harvest or when volume justified with a yet to be developed silage chopper concept. This regrowth material would be sweetgum, red maple, pepperbush, and switchcane. With present technology the harvest costs associated with this biomass harvest would be higher than standard round wood harvest or woods chipping costs. There is an additional cost associated with this strategy that is less apparent. The understory material has a higher concentration of nutrients than pine bark and stem wood. The nutrient concentration increases with increases in the percentage of leaves and non-woody material. Most of eastern North Carolina has soils that are nutrient limited, with much of the available nutrient supply tied up in vegetation. Natural additions to the nutrient pool are limited and would not compensate for removals associated with intensive biomass harvesting of the understory. Thus, nutrient replacement is essential to insure long term sustainability of this type of system. An option for this nutrient replacement is to spread the residual ash from the biomass boiler back across the harvested acres. Research done by the Integrated Waste Management group has shown the costs and values associated with this process. Operational land application of wood ash from the Plymouth boilers is scheduled to begin this year. Estimated application costs are less than costs of new landfill space, so replacement of nutrient removals from biomass harvesting could be limited to nitrogen and phosphorus replacement. There is always the potential for new harvest technologies that would separate leaves and small pieces from the larger pieces and return these to the forest floor with a resulting reduction in this nitrogen and phosphorus replacement cost.

There are values associated with soil organic matter related to water movement, soil structure, root penetration, slow release of nutrients, maintenance of microbial populations, and nutrient retention in the upper soil profile that are extremely difficult to quantify. A conceptual example is the comparison of an old field plantation with a stand on a woods site. The woods site may or may not exhibit the greater productivity of pine, but the greater ecosystem diversity and buffering capacity results in a greater total productivity. The old field site is more comparable to row crop agriculture in relation to the requirement of nutrient additions in excess of removals to maintain long term productivity potential. Another issue in this type of system is the amount of traffic over the soil with heavy harvesting equipment. Rutting and compaction seriously impact the surface rooting volume of most soils and subsequent tree growth. Amelioration during site preparation can alleviate some impacts.

Hardwood Inter-row Planting

The next increment of volume (and cost) would be to plant sweetgum or red maple in a row between the rows of pines. A nitrogen-fixing tree species that was not very competitive with the pine crop trees would be desirable for this use. There is not a native species available. Wax myrtle is an arborescent shrub that has some potential. Black locust has been used in mine reclamation for this purpose, but is not native or particularly adapted to eastern North Carolina. This row would be chipped at first thinning entry and resprouting encouraged. The sprouts could be harvested whenever volume justified reentry. The incremental costs associated with this approach are primarily the planting stock and planting labor.

Summary Strategy #5:

Biologically feasible, high risk, low volumes, high plantation establishment and carrying costs and high harvest costs with current harvest technology.

3.9 Strategy #6 - Grow maximum biomass per acre with a dedicated short rotation plantation using mill residuals and process water and/or other nutrient and water sources locally available to increase the wood and biomass volume produced.

Dedicated Short Rotation Plantation

Weyerhaeuser foresters believe that for the Eastern North Carolina region the lower cost fast growth tree crop to grow is a Loblolly Pine plantation. With the addition of the sludge discussed below, it was assumed that the site index could be increased to an 85 site index. For a harvest age of 10 years, it appears that 800 trees per acre initial planting is a good balance between site preparation and planting costs and maximum biomass growth. As with strategy 4 above, the harvested material should have a value high enough to earn 8 percent real after tax on the site preparation and planting investment. Based on projections of growth and volume and expected planting, site preparation, and harvesting cost, fuel value would have to reach about $50/BDT in order to achieve the required return (see Option 1, Alternative A, Table 3-9). If site preparation and planting costs could be reduced by about 20 percent, then fuel values would only have to reach about $45/BDT (see Option 1, Alternative B, Table 3-9) and if they could be dramatically reduced by 75 percent, then fuel values would only have to be $30/BDT (see Option 1, Alternative C, Table 3-9).

Table 3-9: Short Rotation Pine Plantation

Alternative	A	B	C
Site Index	85	85	85
Initial trees (trees/acre)	800	800	800
Final Harvest Age	**10**	**10**	**10**
Site Prep & Planting Cost	**Normal**	**80%**	**25%**
Option 1: All Merchantable and Residuals to Fuel			
Total Required Return ($/BDT)	**50**	**45**	**30**
Option 2: Merchantable to chips & Residuals to fuel			
Fuel price to return 8% on site prep ($/BDT)	**60**	**30**	

Though it would reduce the amount of biomass for fuel, a more feasible, though still optimistic, alternative would be to harvest for fuel and for pulp and paper chips. Fuel costs would only have to reach $30/acre with a 20 percent reduction in site preparation and planting costs (see Option 2, Alternative B, Table 3-9). The above scenarios all assume an optimistically low harvest and transport cost and a relatively high chip price for a very high site with no incremental cost for the application of sludge to achieve the high productivity site.

Increase Biomass through Application of Sludge

This strategy combines the objective of growing biomass for a fuel source and land application of residuals from a manufacturing process as an alternative to landfill or lagoon storage. The pulp and paper industry generates waste water that must be treated and returned to the environment. Treatment of this process water requires considerable investment and operating costs, regulatory accommodation, and

seasonal limitation depending on normal riverflows. An alternative to river discharge is irrigation of grass crops or tree crops that have a high level of water use. These crops are able to transpire or evaporate surplus water, as well as incorporate water into biomass. The water has to have suitable chemistry for land application and plant use. A system designed to maximize plant growth, maximize water use, and control risks within reasonable limits will probably require nutrient additions to balance the additions in the process water. The net effect would be a system driven by the need to recycle water using land application and a biomass crop. This system maintains the crop near maximum growth rate to minimize the costs of having a larger area under irrigation. Harvest of the crop transports water and nutrients off the site. With tree crops frequent thinning entries could be used to maintain the stand between full site occupancy and adequate room to grow at maximum rates. Trees grown under this type of regime may not have the wood qualities required for standard lumber and pulp products, thus fuel options may provide a viable use. The costs associated with this approach are not realistic with current sources of fuel unless the inputs are subsidized, possibly with less charged for disposal of wastewater and sludges. Hardwood or pine plantations that are fertilized and watered with mill process water, papermill sludges, hoghouse effluent, municipal waste water or sewage sludges have the potential to maximize biomass production while serving to recycle nutrients and water that needs treatment and disposal. While land application of these materials has not been the traditional low cost option, current regulatory pressures, particularly in nutrient sensitive watersheds, are requiring serious consideration of land application systems. With this type of system in use at various sites around the South and eastern North Carolina, the feasibility is proven. Biologically and operationally it is feasible to grow high yields of desirable biomass fuels on dedicated sites while utilizing waste nutrients and water in environmentally sound systems. Potential yields are at least 10 tons/acre/year.

The City of New Bern is currently land applying municipal sludges on agricultural land and seriously pursuing land application options with Weyerhaeuser for waste water. The Neuse River is nutrient sensitive and options to river discharge are being sought. Since Weyerhaeuser's New Bern pulp mill uses and returns water to this river a short distance upstream from New Bern's sewage plant, there is considerable interest from all parties in maintaining economically feasible solutions to the regulatory limits. Weyerhaeuser as a major forest land owner in many North Carolina counties, is the first option for most municipalities considering land application. There is currently a region team developing a unified policy for dealing with these issues. It seems probable that land application will become the disposal method of choice and may offer an opportunity to grow biomass fuels at subsidized costs.

Summary Strategy #6:

Sludge application for high valued crops is double, regulatory driven, may be least cost solution to disposal issues, requires dedicated site and significant investment, some risk of liability issues. Short rotation tree crops dedicated to fuel would require dramatic reductions in site preparation, planting, and harvesting costs in order to achieve a reasonable return on plantation investment even with a significant improvement in growth from sludge application. Short rotation crops for fuel and pulp could be feasible with small improvements in site preparation, planting, and harvesting costs if juvenile wood chips would reach a high enough value.

Section 4

Preliminary Business Assessment for the Integrated Enterprise

4.1 Economic Evaluation Methodology

The purpose of this economic analysis is to evaluate the business potential of the biomass-to-energy project concepts which have been studied for New Bern and to identify the economically preferred project. The energy project must be integrated into the New Bern mill, satisfying the mill's need for thermal and electric energy and all other operational requirements. The evaluation process has to consider the New Bern Mill's energy needs and to compete with any other feasible project which satisfies those needs.

All biomass-to-energy options identified for this economic evaluation supply the required thermal and electrical energy to the mill with the exception of the Base Case Mill (Boiler Modification) Project which would still require the mill to purchase some electricity. Section 2 presents the project description, energy balances, capital costs, and operating and maintenance costs. Because the costs and efficiency of the BGCC technology options are similar, the Tampella flue gas biomass dryer design, which resulted in a slightly lower capital cost and higher efficiency, is used in the economic analysis. Each of the following New Bern Mill project options, with the exception of the Bark Boiler Modification, also produces one or more additional products for sale:

Option No.		Additional Product
1	Bark Boiler Modification	None
2	BGCC	33.4 MW power
3	BGCC/Ethanol	19.5 MW power + 79,000 GPD ethanol
4	Bark Boiler Modification with Ethanol	79,000 GPD ethanol + 25.75 tons/hr lignin

The basis used for this economic evaluation is to determine the incremental net present value of each of the options studied by calculating each option's total net present value and subtracting from this number the base case's present value. This provides a measure of the incremental benefit of the option. The entity being evaluated in each comparison is the energy project option integrated with the New Bern Mill. Only cash flows between this entity and outside parties are material to this analysis. The base case utilized is a modified power boiler where all cash flows are expenditures. A Weyerhaeuser goal is to minimize the present value of these expenditures.

An incremental project for each option is defined as the total project minus the base case which satisfies the mill's energy needs through the utilization of biomass and oil in the existing boiler. It is the incremental portion of the project which produces other marketable products. If the present value of the incremental plant is positive, then the present value of the total project is greater than the Boiler Modification project, and the option is preferred to the Boiler Modification project. The project with the highest positive incremental present value is the preferred project, which may best meet Weyerhaeuser's goal of minimizing the cost of supplying the mill with the required thermal and electrical energy. The evaluation presented here is focused on the three incremental project options.

A discounted cash flow (DCF) analysis was used to develop the economic assessment for the incremental projects by deducting a DCF analysis of the Boiler Modification from a DCF analysis of the Option. The economic criteria, as described above, is the net present value (NPV) of the incremental plant's after-tax, pre-finance cash flow. The discount rate used to determine the present value is 12 percent. The evaluation was performed using expected values for all input parameters; the effect of uncertainties in the inputs was determined through sensitivity analyses. The discount rate was one of the variables subjected to a sensitivity analysis.

4.2 Analysis Input

Input required for economic analysis of the alternative projects include the following:

- Common Input:
  - Schedule
  - Inflation and Escalation Projections
  - Tax Data
  - Unit Prices
- Option Data:
  - Performance
  - Capital Cost
  - Operating Cost
- Economic Development Incentives
  - Capital Grants
  - Tax Credits

Most of the common and economic development incentives input data is summarized on Table 4-1.

The project development schedule is presented in Section 2.8. Schedule information important to the economic evaluation includes the present day reference date for escalating prices, the start of construction, and the in-service date. A 20-year operating life was assumed.

A long-term general inflation rate of 3.5 percent was assumed for the analysis. This rate agrees with the inflation projection being used by Carolina Power & Light (CP&L) in its assessment of the market value of power in its region. For escalation rates, most expenditures are expected to escalate with inflation except for waste disposal and fuel oil. Waste disposal escalation is expected to run slightly ahead of inflation; a real escalation rate of 0.5 percent was assumed. The average, long-term real escalation projection of 3.0 percent for fuel oil is based on data published in "Energy Price Indices and Discount Factors for Life-Cycle Cost Analysis - 1995," by the U.S. Department of Commerce (Publication No. NISTIR 85-3273-9). This reference also verified that electricity prices are expected to closely follow inflation over the long term. Weyerhaeuser expects the feedstock price escalation to be somewhere between -1 to +2 percent in real terms over the long term. For the design basis evaluation, feedstock is expected to escalate with inflation. The effect of feedstock price escalation on the economic results will be addressed in the sensitivity analysis.

Tax data includes the following:

- Income Tax:
  - Federal tax rate is 35 percent of taxable income.
  - Weyerhaeuser's effective state income tax rate for plants located in North Carolina is assumed to be 3 percent and is deductible for Federal Income Tax computation.

- Tax depreciation rate for the biomass-to-energy projects is 5 year, 200 percent declining balance.

- Property Tax:
  - Property tax rate is 0.66 percent of book value.
  - Book value declines 7 percent per year until 25 percent of the original value is reached.

The State of North Carolina offers several tax credits which may apply to some or all of the options being considered. The possible credits include:

- Construction of Cogenerating Power Plant

  - For purchase and installation of the electrical or mechanical power generating equipment of a cogenerating power plant.

  - Credit equals 10 percent of the installed cost.

  - The credit may not exceed the taxpayer's North Carolina tax liability.

  - Ten-year carryover period.

  - The combustion equipment that uses residual oil, middle distillate oil, gasoline, natural gas, or LPG does not qualify for the credit.

  - If the total credit for all applicants exceeds $5,000,000 during a calendar year, the credit will be prorated among all eligible applicants.

- Conversion of Industrial Boiler to Wood Fuel

  - For modification or replacement of an oil or gas-fired boiler or kiln and associated fuel and residue handling equipment with one that is capable of burning wood.

  - One-time credit equals 15 percent of the equipment and installation cost of conversion.

  - No carryover.

  - The credit may not exceed the taxpayer's North Carolina tax liability.

- Fuel Ethanol Distillery

  - For the construction of a distillery to make ethanol from forestry products

  - Only applicable to costs incurred during taxable years beginning prior to January 1, 1996.

  - Credit equals 20 percent of the installation and construction costs, plus an additional 10 percent if the distillery is powered by an alternative fuel source.

  - The credit may not exceed the taxpayer's North Carolina's tax liability.

  - The excess, if any, may be carried forward for the next ten years.

- If the total tax credit from all eligible taxpayers exceeds $5,000,000 and/or $2,500,000 for all eligible corporations, the credit will be limited.

Use of these credits is limited either by Weyerhaeuser's effective state tax rate or by possible competition for the credits by other applicants. The effect of including any one of these three possible tax credit was not evaluated for the design basis evaluation at this time. The credits, when applicable, were utilized in a sensitivity calculation and in this calculation were assumed to be used in their entirety in the first year of operation, offsetting other Weyerhaeuser state tax liability. In the sensitivities, the cogeneration and wood fuel credits were used for Option 2, and the ethanol credit was used for Options 3 and 4.

Biomass gasification is eligible for a federal tax credit based on a barrel-of-oil equivalent, adjusted annually for inflation (1994 credit rate per barrel was about $5.85). However, the following conditions apply:

- Credit is allowed to the producer of gas from biomass if the gas is sold to an unrelated person.
- The facility must be placed in service before January 1, 1997, pursuant to a binding written contract in effect before January 1, 1996.
- Credits can not be used against the minimum tax.
- Credit can be phased out if oil prices exceed certain levels (1994 level is about $45.75 per barrel).
- Credit expires on January 1, 2008.

Since a BGCC project at New Bern could not meet the January 1, 1996, date (refer to Figure 2.8-1, Project Schedule in Section 2.8), this federal tax credit was not considered in the economic analysis. There is a federal tax credit available to ethanol producers whose production capacity does not exceed 30 million gallons in a tax year. The credit is ten cents per gallon for up to 15 million gallons of production. This credit is scheduled to expire on January 1, 2001. An alcohol plant at the New Bern mill would qualify for this credit. However, since the ethanol process requires additional development before a project of the size proposed at New Bern could be initiated, by the time the plant is commissioned the tax credit would be expiring in a year or so. It is, of course, possible that the tax credit would be extended. Therefore, the impact of the tax credit is considered in the economic sensitivity studies.

An alcohol fuel credit is also allowed by the Federal government. However, this credit accrues to the person who actually uses or sells the alcohol for fuel. This credit is discussed in the ethanol market assessment presented in Section 6.2. It is used to develop the expected price at which ethanol would be sold by the New Bern facility to a blender/retailer such as Amoco.

Unit prices used to determine operating costs are presented in Section 2.7. The market price of feedstock is uncertain so the effect of varying feedstock prices on the economic results was tested in the sensitivity analysis. Prices for marketable products are as follows:

- Export power: CP&L has determined the current market value of the power from the BGCC options to be less than $0.03/kWh initially and $0.038/kWh levelized over 20 years, based on their avoided cost curve, shown on Figure 6-1. However, a need for baseload power by other utilities in the region in the early years of the next decade may offer market opportunities for export power. Therefore, a range of power sales prices from $0.03 to $0.07/kWh has been

assumed to assess the economic impact associated with varying power price levels. CP&L has indicated that the value of export power may be affected by the unit dispatchability. Therefore, the capacity factor of the export power portion of the plant is treated separately from the rest of the energy plant. The export power capacity factor will never exceed that of the energy plant but may be less, thus affecting revenues.

- Ethanol: The market price for ethanol was assumed to be $1.17/gallon based on the average market price over the last 3 years, which is supported by the market assessment Amoco presented in Section 6.2. The market price has varied between $0.94/gallon and $1.45/gallon during that period, and does not appear to be trending up or down but staying level. The ethanol project feasibility is sensitive to the sales price, therefore alcohol price is a variable used for a sensitivity analysis.

- Lignin: Lignin is a useful byproduct of the ethanol process. The lignin will be either used in the gasification process (Option 3), or sold commercially as an alternative to mill biomass residues (Option 4). The market value adjusted for boiler efficiency losses is assumed to be $12/ton or $21.82/BDT.

Data on the performance of each option is presented in Section 2.6. The performance parameters of interest include amount and type of feedstock required, and amount of each product generated. These data are provided on a "per operating hour" basis. For those times when the project may be out of service and unable to provide the needed energy to the mill, backup thermal energy is provided by a No.6 oil-fired boiler and backup power is provided by purchases from the utility. The capacity factor of the energy plant is another variable in the sensitivity analysis.

Capital and operating costs developed for each option have been presented in Section 2.7. The capital costs are presented in January 1995 dollars. For the economic evaluation, escalation and interest during construction (IDC) were added to arrive at a total in-service date investment. Escalation was included from the present day reference date to the centroid of expenditure, assumed to occur mid-way through construction. IDC was calculated from the centroid of expenditure to the in-service date, assuming 100 percent debt at short-term interest, which was assumed to be 9 percent. The operating costs include fixed costs, which are incurred whether or not the facility runs as many hours each year as projected, and variable costs, which are incurred only when the facility runs. The estimated capital costs are variables tested in the sensitivity analysis. Of the O&M costs, only feedstock price, feedstock price escalation, feedstock consumption rate, and enzyme cost are tested in the sensitivity analysis.

Capital grants may be available for the BGCC and BGCC/Ethanol options. The federal funding will help mitigate a portion of the capital risk in an integrated system. A maximum of 50 percent of the plant cost may be available as capital support. The projects, however, are evaluated with and without capital support to assess the federal funding required for commercialization.

4.3 BGCC Plant Economic Analysis

The technical and cost input for this option is presented on Table 4-2 and incorporates the total energy project, including that portion which serves the mill's thermal and power requirements. The mill is expected to operate 336 days/year at equivalent full-load, but the BGCC plant is expected to be available for only 310 days/year. Backup steam and power are needed for the mill during those additional days. For this evaluation the Bark Boiler Retrofit is assumed to operate 336 days/year at equivalent full-load. A separate capacity factor is incorporated for the export power portion of the BGCC plant to account for some amount of dispatching which CP&L may value more highly than a fully dispatched generator.

Capacity factor for both the energy plant and for the export power portion of the plant are variables to be tested in the sensitivity analysis.

The discounted cash flow for the incremental plant is presented on Table 4-3. The "boxed-in" data along the left side of the cash flow statement highlights important input such as the market price of power used in the analysis which is $0.05/kWh, the cost of feedstock, capital cost, and support and tax credits. The highlighted capital cost is the present day cost without escalation and IDC to the in-service date; the capital support shown is based on the total in-service date cost of $118,300,000 including escalation and IDC. With these assumptions, the NPV at the end of the 20th year of operation, at a 12 percent discount rate, is +$28 million, indicating that the BGCC plant is preferred over the Boiler Modification project.

4.4 BGCC/Ethanol Plant Economic Analysis

The economic analysis input for this option is presented on Table 4-2 and incorporates the total energy project, including that portion which serves the mill's thermal and power requirements. The mill is expected to operate at equivalent full-load for 336 days/year, but the BGCC/Ethanol plant is expected to be available for only 310 days/year. Backup steam and power are needed for the mill during those additional days. A separate capacity factor is incorporated for the export power portion of the BGCC/Ethanol plant to account for some amount of dispatching which CP&L may value more highly than a base loaded generator. Capacity factor for both the energy plant and for the export power portion of the plant are variables to be tested in the sensitivity analysis.

A selected discounted cash flow for the incremental plant is shown in Table 4-4. Important input data has been "boxed-in" as was done for the BGCC case. Important input data includes the ethanol market price assumption of $1.17/gallon and the power price of $0.05/kWh. The highlighted capital cost includes the alternative's present day cost of $189,300,000 and the capital support of $114,650,000, based on the in-service date cost of $229,300,000 which includes escalation and IDC. The NPV of the net cash flow discounted at 12 percent per year at the end of the twentieth year of plant operation is shown in Figure 4-1 as a function of biomass and enzyme cost, the two most costly inputs to the combined Ethanol/BGCC facility.

The figure shows that under the assumed economic environment, the combined Ethanol/BGCC facility can be an attractive option to the bark boiler retrofit over a range of selected biomass and enzyme costs. With biomass costs of $10.00 per wet ton, enzyme costs below about $5.70/gallon will produce a positive NPV versus the bark boiler retrofit. At biomass costs of $20.00 per wet ton, enzyme costs below $1.80/gallon will produce a positive NPV versus the bark boiler retrofit. At the centroid biomass cost of $14.00 per wet ton, enzyme costs below about $4.20 will produce a positive NPV. The BGCC/Ethanol plant option will return the same NPV as the BGCC option with biomass costs at $14.00 per wet ton and enzyme costs of about $2.40/gallon.

For a purchase decision on enzyme today, the $7.57/gallon used in the economic calculations is considered realistic. The sensitivity to enzyme costs would indicate that an improved method of enzyme production or on-site production should be investigated as a way to significantly decrease the cost of ethanol. An April 30, 1993 report entitled "The Cost of Ethanol Production from Lignocellulosic Biomass - A Comparison of Selected Alternative Processes" prepared by the Michigan Biotechnology Institute for the United States Department of Agriculture (Specific Cooperative Agreement No. 58-1935-2-050) includes costs for onsite enzyme production which illustrate the large cost reduction potential.

4.5 Ethanol Plant Economic Analysis

The economic analysis input for this option is presented on Table 4-2 and incorporates the total plant, including that portion which serves the mill's thermal and power requirements. The Ethanol plant is expected to operate at least as much as the mill which is expected to operate 336 days/year. Operating cost associated with the provision for backup steam and power are zero, but the backup capability is included in the design. The capacity factor for the energy plant is a variable to be tested in the sensitivity analysis.

A selected discounted cash flow for the incremental plant is shown in Table 4-5. Important input data has been "boxed-in" as was done for the BGCC case. Important input data includes the ethanol market price assumption of $1.17/gallon and the lignin sales price of $12 per ton or $0.96/MBtu. The highlighted capital cost includes the alternative's present day cost of $117,900,000 and the capital support of $71,250,000, based on the in-service date cost of $142,500,000 which includes escalation and IDC. The NPV of the net cash flow discounted at 12 percent per year at the end of the twentieth year of plant operation is shown in Figure 4-2 as a function of biomass and enzyme cost.

The figure shows that under the assumed economic environment, the Ethanol facility can be an attractive option to the bark boiler retrofit over a range of selected biomass and enzyme costs. With biomass costs of $10.00 per wet ton, enzyme costs below about $3.50/gallon will produce a positive NPV versus the bark boiler retrofit. At biomass costs of $20.00 per wet ton, enzyme costs below about $0.80/gallon will produce a positive NPV versus the bark boiler retrofit. At the centroid biomass cost of $14.00 per wet ton, enzyme costs below about $2.50 will produce a positive NPV. The Ethanol plant option will return the same NPV as the BGCC option with biomass costs at $14.00 per wet ton and enzyme costs of $1.00/gallon.

4.6 Comparison of BGCC, BGCC/Ethanol, and Ethanol to the New Bern Mill Modification Project

All three options to the bark boiler retrofit are expected to return the same positive NPV of about $28 million under the following primary conditions, assuming a power market value of $0.05/kWh and an ethanol market value of $1.17/gallon:

Option vs Bark Boiler Retrofit	Biomass Cost $/Wet Ton	Enzyme Cost $/Gallon
BGCC	14.00	Not Applicable
BGCC/Ethanol	14.00	2.40
Ethanol	14.00	1.00

Please note that all projects except the Bark Boiler Retrofit assume 50% capital support as may be available under the Bimoass Power Program.

4.7 Sensitivity Analysis

Sensitivity analyses of the NPV for each incremental project option to the following parameters were performed in order to provide development guidance for future phases of the biomass to liquid fuels and electricity program:

- Amount of capital support - from 0% to 50%
- Export power price - from $0.03/kWh to $0.07/kWh
- Ethanol price - from $0.94/gallon to $1.45/gallon

- Lignin price - from $0/ton to $12/wet ton
- Enzyme cost - from $1/gallon to $8/gallon
- State and federal tax credits - applicable or not
- Export power capacity factor - from 50% to 92%
- Biomass escalation rate - from -1% to 2% real
- Biomass cost - from $10/ton to $20/ton for new biomass (mill residual cost is approximately 43% of new)
- Energy plant capacity factor - from 65% to 92%
- Performance - fuel consumption from 80% to 130% of estimated. Note that output stays constant.
- Discount rate - from 10% to 15%
- Capital cost - from 50% to 150% of estimated cost without capital support

The results are presented on Figures 4-3 through 4-15.

Based on the above listed sensitivity analyses, it is apparent that the ethanol projects are sensitive to project capital cost, lignin sales price, and biomass and enzyme cost. Figures 4-1 and 4-2 demonstrate the wide range of biomass and enzyme costs over which the production of ethanol from woody biomass through enzymatic processing can be economically attractive versus the bark boiler retrofit case. Issues related to plant design, plant performance, and enzyme costs are items which should be investigated in future phases of biomass-to-liquid fuels technology development. Enhancement of the lignin byproduct value is another fertile area for improving ethanol production economics. The results of this feasibility study are especially encouraging because the ethanol plant options have not been optimized, nor have they been demonstrated on the scale that BGCC has.

The BGCC technology is a more mature technology than ethanol manufacture from woody biomass and, therefore, has near term commercialization potential at New Bern. Given the projected value of power in the region and the fact that a BGCC plant could serve a mill need being defined, the results of this study demonstrate that the BGCC has the potential for achieving improved mill operation and biomass efficiency in a cost competitive manner today.

An examination of three of the sensitivity curves is supportive of this conclusion. Figures 4-4 and 4-9 show the large effect of export power price and capacity factor. Figure 4-15 shows the equally large impact of capital cost. It is evident from these curves that an economically viable BGCC project integrated with a market pulp mill may ultimately be feasible (without subsidy) if the capital cost can be reduced by at least 20%, the export power can be sold for a minimum of 5 cents/kWh and the facility can achieve a capacity factor over 80% The first few plants will have to demonstrate the ability to achieve these goals. The biggest challenges are to reduce the capital cost and demonstrate availability.

The EPRI Technical Assessment Guide (TAG) points out that the cost of the first commercial unit is often higher than expected, but the cost gradually decreases with each of the next three or four units. The cost of the "mature" technology can be lower than the cost predicted prior to the first unit. The commercialization of fluidized bed combustion power plants generally followed this pattern, although the capital cost increased significantly after the first units and then gradually decreased. This was due to the technology owners anxiousness to increase sales rapidly. They designed the initial plants for low capital cost, but they encountered operational problems. Solutions to these operating problems resulted in higher costs for subsequent units. However, less expensive solutions were developed as the technology matured reducing capital cost and the technology has flourished.

Reasons why capital cost reductions can be anticipated as a technology matures are discussed in Section 2.7.1. Gasification combined cycle technology affords much greater opportunity for cost reduction than was available to fluidized bed combustion.

It is important to note that there are many pulp mills much larger than New Bern. BGCC projects at these larger mills can accommodate larger more efficient gas turbines. Increasing from the 40 MW GE Frame 6B gas turbine to the 70 MW 6FA gas turbine should result in an economy of scale capital cost reduction of over 10%.

The objective of this study was to evaluate BGCC for application to the New Bern mill. As such the BGCC project was compared against the mill's plan to retrofit the existing bark boiler. However, a clearer picture of BGCC competitiveness is seen by comparing the BGCC project to a new bark-fired boiler project.

Weyerhaeuser obtained a cost for a new biomass boiler which would replace the steam generation of the existing bark boiler plus generate additional steam which would be used in a new condensing steam turbine to generate the extra electricity required to make the mill self-sufficient. The condensing steam turbine is oversized to debottleneck the existing backpressure steam turbine as discussed in Section 1.3. This project compares to the BGCC project as follows:

	BGCC	New Biomass Boiler
Capital Cost	$98 million	$60.3 million
Annual O&M Cost (excl. fuel)	$5.2 million	$2.2 million
Biomass Consumed, MBtu/hr	669.7	422.4
Export Power, MW	33.4	0

The BGCC project has a higher capital cost and higher annual O&M and fuel cost than the new biomass boiler, but the BGCC project produces 33.4 MW for sale to the grid. The electricity sale price will determine whether the additional costs of the BGCC project are justified. In Figure 4-16, the BGCC incremental net present value (the difference between the net present value of the BGCC project without any subsidy or capital cost support and the net present value of the new biomass boiler project) is plotted against the price at which the export power can be sold. The incremental net present value is greater than zero at an electricity sales price of $0.035/kWh. This means that over the project 20 year life, the BGCC project begins to compete with a new biomass boiler if the electricity could be sold today for at least $0.035/kWh. Of course, the greater the electricity sales price the quicker payback on the increased BGCC costs. In Figure 4-17 the BGCC incremental net present value which would result if the present day power sales price were $0.05/kWh is plotted against years of project life. The figure shows that after 8 years of operation the initial higher capital cost of the BGCC project pays off. At a current electricity sales price of $0.07/kWh, the payback period is reduced to about 4.5 years as is evident in Figure 4-18.

It is important that a result of this nature appears achievable. If all future projects required a subsidy to proceed it would be difficult to justify the development dollars to commercialize the technology. However, given this analysis and the potential of the technology as discussed in other sections of this report, DOE support of BGCC technology commercialization appears well justified.

Table 4-1: Economic Input Table

06-Apr-95
03:00 PM

SCHEDULE:	(Beginning of Year)				
Present Day		1995			
Start Construction		1997			
Centroid of Capital Expenditure		1998			
First Year of Operation		1999			
Economic Life		20	years		
Effective Full-Load Mill Operating Schedule		336	days		
Effective Full-Load Mill Capacity Factor		92%			
ECONOMIC:					
Inflation Rate (PPI)		3.5%			
Escalation Rates (Nominal)					
Capital Cost		3.5%			
O&M Cost:					
Labor		3.5%	Utilities		
Maintenance Materials		3.5%	Power	3.5%	
Insurance		3.5%	Water	3.5%	
Waste Disposal - Pretreatment		4.0%	Fuel Oil	6.6%	
" - Fermentation		4.0%	Waste Water	3.5%	
" - Solids Separation		4.0%	Feedstock:	3.5%	
Chemicals		3.5%			
Output:					
Ethanol		3.5%			
Lignin		3.5%			
Other		3.5%			
Steam		3.5%			
Discount Rate		12%			
TAX DATA:					
Federal income tax rate		35.0%			
State income tax rate		3.0%	(Effective - Weyerhaeuser)		
Effective rate		37.0%			
Local tax rate (Gross Receipts Tax)		0.0%			
Property Tax		0.66%	of Book Value		
Book Depreciation		7.0%	p.a.,minimum	25.0%	
Ethanol Production Tax Credit		$0.00	/gal for max.	15,000,000	gal/yr
Last year credit applies		2000			
Power from Certain Renew. Tax Credit		$0.00	/kwh		
Investment Tax Credit	Ethanol Prod.	30%	Carry Forward	10	years
	Cogeneration	10%	"	10	"
	Wood Fuel	15%	"	0	"
Tax Depreciation		Life	Rate		
Buildings		32	100.0% decl. bal.		
Development Costs	--		include in Biomass Conv.		
Plant: Biomass Conversion		5	200.0% decl. bal.		
Cogen Plant		15	150.0% decl. bal.		
Book Depreciation		20	years		

Table 4–2: Master Input Table

OPTION NO. CASE DESCRIPTION:

1 Base Case – Bark Boiler Retrofit
2 BGCC Tampella Process with Flue Gas Dryer
3 BGCC Tampella Process with Flue Gas Dryer plus Ethanol Plant (Amoco Process)
4 Bark Boiler Retrofit plus Ethanol Plant

06–Apr–95
12:04 PM

				OPTION NO. :		1	2	3	4
				UNITS	1				
Plant Size				TPD (wet)	2	720	1,826	3,353	2,570
Output/Revenue Items					3				
Net BGCC Output				MW	4	0.0	39.0	37.8	0.0
Net MW to Mill			$0.000 /kwh	MW	5	0.0	5.6	18.8	0.0
Revenue:					6				
					7				
Power Sales to Grid			$0.0700 /kwh	$/hr	8	$0	$2,338	$1,365	$0
			Output	MW	9	0.0	33.4	19.5	0.0
Steam to Mill	LP Steam		$0.00 /klb	$/hr	10	$0	$0	$0	$0
			Output	lb/hr	11	45,000	45,000	45,000	45,000
	HP Steam		$0.00 /klb	$/hr	12	$0	$0	$0	$0
			Output	lb/hr	13	156,000	156,000	156,000	156,000
					14				
Lignin		$0.96 /MBtu	$6.00 /klb	$/hr	15	$0	$0	$0	$309
		6,270 Btu/lb	Output–Used in gasifier or sold commerci	klb/hr	16	0	0	51.5	51.5
Ethanol			(Yes = 1, No = 0)		17	0	0	1	1
Ethanol Sales			$1.17 /gal	$/hr	18	$0	$0	$3,851	$3,851
			Production Rate	gal/ton (we	19	0	0	24	31
				GPD	20	0	0	79,000	79,000
Other			(Yes = 1, No = 0)		21	0	0	0	0
			$0.00 /gal	$/hr	22	$0	$0	$0	$0
			Production Rate	gal/ton (we	23	0	0	0	0
				GPD	24	0	0	0	0
					25				
Capital Cost of Facility				$1000	26	$0	$0	$0	$0
Land				$1000	27	$0	$0	$0	$0
Buildings (Included Below)					28				
					29				
Biomass Conversion Plant									
Feed Prep and Handling			(Included Below)	$1000	30				
Biomass Drying				$1000	31				
Gasification Island				$1000	32				
Ash Handling				$1000	33				
SUBTOTAL				$1000	34				
Engeneerin	@	5.0%		$1000	35				
Indirects	@	5.5%		$1000	36				
Contingenc	@	10.0%		$1000	37				
TOTAL for BGCC				$1000	38	$21,100	$97,900	$189,800	$117,900
Cogeneration Plant				$1000	39				
Engineering	@	5.0%		$1000	40				
Indirects	@	5.5%		$1000	41				
Contingency	@	10.0%		$1000	42				
TOTAL for COGENERATION PLANT				$1000	43	$0	$0	$0	$0
TOTAL CAPITAL COST of FACILITY				$1000	44	$21,100	$97,900	$189,800	$117,900

Table 4–2: Master Input Table

OPTION NO. CASE DESCRIPTION: 06–Apr–95 12:04 PM

1 Base Case – Bark Boiler Retrofit
2 BGCC Tampella Process with Flue Gas Dryer
3 BGCC Tampella Process with Flue Gas Dryer plus Ethanol Plant (Amoco Process)
4 Bark Boiler Retrofit plus Ethanol Plant

				OPTION NO. :		1	2	3	4
				UNITS	1				
					45				
					46				
Annual Operating Costs					47				
					48				
Fixed:									
Labor(Including Maintenance, Supervision and Overhead)				$1000	49	$1,711	$2,351	$3,994	$2,993
Fixed Maintenance Materials				$1000	50	$191	$1,305	$2,605	$1,491
Variable:					51				
Variable Labor (CT Turbine Maintenance)				$1000	52	$0	$106	$106	$0
Variable Materials (CT Turbine Maintenance)				$1000	53	$0	$350	$350	$0
Feedstock– New Biomass	$14 /ton, Price per MBtu	$1.59		$/hr	54	$0	$645	$1,536	$1,079
Consumption	4,400 Btu/lb			lb/hr	55	0	92,200	219,400	154,134
Mill Residuals	***** $6 /ton, Price per MBtu	$0.68		$/hr	56	$180	$180	$180	$180
Consumption				lb/hr	57	60,000	60,000	60,000	60,000
Other	$2			$/hr	58	$0	$0	$0	$0
Consumption				lb/hr	59	0	0	0	0
Waste Disposal – Pretreatment				$/hr	60	$0	$0	$0	$0
Fermentation				$/hr	61	$0	$0	$0	$0
Ash Disposal	$12 /ton of ash			$/hr	62	$18	$26	$27	$18
	Ash production rate			lb/hr	63	2,975	4,400	4,570	2,975
Process Water	$0.055 /kgal			$/hr	64	$0.00	$0.00	$1.20	$1.20
	Consumption			GPM	65	0	0	363	363
Cooling Tower Makeup	$0.055 /kgal			$/hr	66	$0.00	$0.10	$0.87	$0.78
	Consumption			GPM	67	0	30	265	235
Feedwater Makeup	$1.50 /kgal			$/hr	68	$0.27	$0.36	$19.17	$19.17
	Consumption			GPM	69	3.0	4.0	213.0	213.0
Waste Water	$1.19 /kgal			$/hr	70	$0.00	$0.00	$51.84	$51.84
	Output			GPM	71	0	0	726	726
Misc Chemicals				$/hr	72	$0.00	$116.00	$263.00	$0.00
					73				
Cellulose Enzyme	$7.57 /gal			$/hr	74	$0.00	$0.00	$2,195.30	$2,195.30
	Consumption			GPD	75	0	0	6960	6960
#6 Fuel Oil	$20.00 /bbl			$/hr	76	$216	$0.00	$0.00	$543
	Consumption			bbl/hr	77	10.8	0.0	0.0	27.2
Purchased Power	$0.054 /kwh			$/hr	78	$302	$0	$0	$1,015
	Consumption (Note 2)			MW	79	5.6	0.0	0.0	18.8
					80				

Note1. Hourly rates are based on 24hr/day operation
2. Mill purchases power during all operating hours under Option 1 only; power is purchased from utility during Energy Plant downtimes for all other options.

Table 4 – 3 A

CLIENT: WEYERHAEUSER
PROFORMA FINANCIAL STATEMENT

Incremental PLIant(Alternate– Base)
Option #: 2 Less Option No.: 1
BGCC Tampella Process with Flue Gas Dryer
Less: Base Case – Bark Boiler Retrofit

06–Apr–95
02:38 PM

End of Year	1998	1999	2000	2001	2002	2003	2004	2005	2006	2007	2008
Years from P.D.	4	5	6	7	8	9	10	11	12	13	14
Operating Year	0	1	2	3	4	5	6	7	8	9	10
Capacity Factors – Mill		92.0%	92.0%	100.0%	92.0%	92.0%	92.0%	92.0%	92.0%	92.0%	92.0%
Energy Plant		85.0%	85.0%	85.0%	85.0%	85.0%	85.0%	85.0%	85.0%	85.0%	85.0%
Export Power		85.0%	85.0%	85.0%	85.0%	85.0%	85.0%	85.0%	85.0%	85.0%	85.0%
Feedstock Quantity (tons per year)		324,865	324,865	324,865	324,865	324,865	324,865	324,865	324,865	324,865	324,865
Ethanol Production (gallons per year)		0	0	0	0	0	0	0	0	0	0
CASH FLOW STATEMENT (PROJECT) ($1000's)											
REVENUE											
Commercial Products:											
Power $0.0500 /kwh		14,769	15,288	15,821	16,374	16,947	17,541	18,154	18,790	19,448	20,128
Ethanol $1.17 /gallon		0	0	0	0	0	0	0	0	0	0
Other		0	0	0	0	0	0	0	0	0	0
Lignin $0.96 /MBtu		0	0	0	0	0	0	0	0	0	0
Weyerhaeuser Use:											
Power		0	0	0	0	0	0	0	0	0	0
LP Steam		0	0	0	0	0	0	0	0	0	0
HP Steam		0	0	0	0	0	0	0	0	0	0
Tipping Fee:											
New Biomass $0.00		0	0	0	0	0	0	0	0	0	0
Mill Residuals $0.00		0	0	0	0	0	0	0	0	0	0
Other $0.00		0	0	0	0	0	0	0	0	0	0
Total Revenue		$14,769	$15,288	$15,821	$16,374	$16,947	$17,541	$18,154	$18,790	$19,448	$20,128
LESS O&M EXPENSES											
Labor – Supervisory		760	787	814	843	872	903	934	967	1,001	1,036
Fixed Maintenance Materials		1,323	1,369	1,417	1,467	1,518	1,571	1,626	1,683	1,742	1,803
Insurance		1,093	1,131	1,170	1,211	1,254	1,298	1,343	1,390	1,439	1,489
Property Tax		612	570	530	493	458	426	396	369	343	319
Variable Labor		126	130	135	140	144	150	155	160	166	172
Variable Maintenance		416	430	445	461	477	494	511	529	547	567
Waste Disposal – Pretreatment		0	0	0	0	0	0	0	0	0	0
– Fermentation		0	0	0	0	0	0	0	0	0	0
– Solids Separation (Ash or Lignin)		64	67	69	72	75	78	81	85	88	92
Chemicals		1,026	1,062	1,099	1,137	1,177	1,218	1,261	1,305	1,351	1,398
Cellulose Enzyme		0	0	0	0	0	0	0	0	0	0
Process Water		0	0	0	0	0	0	0	0	0	0
Cooling Tower Makeup		1	1	1	1	1	1	1	1	1	1
Feedwater Makeup		1	1	1	1	1	1	1	1	1	1
Waste Water		0	0	0	0	0	0	0	0	0	0
#6 Fuel Oil (Supplemental)		(2,397)	(2,555)	(2,724)	(2,904)	(3,096)	(3,300)	(3,518)	(3,750)	(3,998)	(4,262)
#6 Fuel Oil (Backup)		670	714	761	811	865	922	983	1,048	1,117	1,191
Feedstock – New Biomass ($/ton) $14.00 $1.59 /MBtu		5,708	5,907	6,114	6,328	6,550	6,779	7,016	7,262	7,516	7,778
– Mill Residuals ($/ton) $6.00 $0.68		(131)	(136)	(140)	(145)	(150)	(156)	(161)	(167)	(173)	(179)
– Other ($/ton) $2.00 $0.23		0	0	0	0	0	0	0	0	0	0
Power (Purchased from Utility)		(2,674)	(2,768)	(2,865)	(2,965)	(3,069)	(3,176)	(3,287)	(3,402)	(3,522)	(3,645)
Gross Receipts Tax (Income Tax Deductible)		0	0	0	0	0	0	0	0	0	0
Total O&M Expenses		$8,597	$8,710	$8,828	$8,951	$7,078	$7,209	$7,343	$7,480	$7,620	$7,761
GROSS MARGIN		$8,172	$8,578	$8,992	$9,423	$9,869	$10,332	$10,812	$11,310	$11,828	$12,367
TAX DEPRECIATION		(6,730)	(10,768)	(6,461)	(3,876)	(3,876)	(1,938)	0	0	0	0
TAXABLE INCOME (Before Financing)		$1,442	($2,192)	$2,532	$5,547	$5,993	$8,394	$10,812	$11,310	$11,828	$12,367
TAXES: Income		(533)	810	(935)	(2,050)	(2,214)	(3,101)	(3,995)	(4,178)	(4,370)	(4,570)
Invest Tax Credits: $0 $0 $0		$0	$0	$0	$0	$0	$0	$0	$0	$0	$0
Production Tax Credit (Ethanol) (Cogen.) (Wood)		$0	$0	$0	$0	$0	$0	$0	$0	$0	$0
INCOME AFTER TAX (Before Financing)		$909	($1,382)	$1,596	$3,497	$3,779	$5,292	$6,817	$7,131	$7,458	$7,797
TAX DEPRECIATION		6,730	10,768	6,461	3,876	3,876	1,938	0	0	0	0
P.D.Cost Cap.Grant											
PLANT COST Base: $21,100 $0	(33,650)										
NET AFTER–TAX CASH FLOW Alternative: $97,900 ($59,150)	($33,650)	7,639	9,388	8,057	7,374	7,655	7,230	6,817	7,131	7,458	7,797
CUMULATIVE CASH FLOW	($33,650)	($26,011)	($16,625)	($8,568)	($1,194)	$6,461	$13,691	$20,508	$27,639	$35,096	$42,894
CUMULATIVE IRR (Before Financing)		NA	NA	NA	NA	6.26%	11.01%	14.07%	16.33%	18.01%	19.26%
CUMULATIVE NET PRESENT VALUE @ 12.0%	($33,650)	($28,829)	($19,347)	($13,612)	($8,926)	($4,582)	($919)	$2,164	$5,044	$7,734	$10,244

Table 4 – 3 B

CLIENT: WEYERHAEUSER
PROFORMA FINANCIAL STATEMENT

Incremental PLIant(Alternate– Base)
Option #: 2 Less Option No.: 1
BGCC Tampella Process with Flue Gas Dryer
Less: Base Case – Bark Boiler Retrofit

06–Apr–95
02:38 PM

End of Year	2009	2010	2011	2012	2013	2014	2015	2016	2017	2018
Years from P.D.	15	16	17	18	19	20	21	22	23	24
Operating Year	11	12	13	14	15	16	17	18	19	20
Capacity Factors – Mill	92.0%	92.0%	92.0%	92.0%	92.0%	92.0%	92.0%	92.0%	92.0%	92.0%
Energy Plant	85.0%	85.0%	85.0%	85.0%	85.0%	85.0%	85.0%	85.0%	85.0%	85.0%
Export Power	85.0%	85.0%	85.0%	85.0%	85.0%	85.0%	85.0%	85.0%	85.0%	85.0%
Feedstock Quantity (tons per year)	324,885	324,885	324,885	324,885	324,885	324,885	324,885	324,885	324,885	324,885
Ethanol Production (gallons per year)	0	0	0	0	0	0	0	0	0	0
CASH FLOW STATEMENT (PROJECT) ($1000's)										
REVENUE										
Commercial Products:										
Power $0.0500 /kwh	20,833	21,562	22,316	23,098	23,906	24,743	25,609	26,505	27,433	28,393
Ethanol $1.17 /gallon	0	0	0	0	0	0	0	0	0	0
Other	0	0	0	0	0	0	0	0	0	0
Lignin $0.96 /MBtu	0	0	0	0	0	0	0	0	0	0
Weyerhaeuser Use:										
Power	0	0	0	0	0	0	0	0	0	0
LP Steam	0	0	0	0	0	0	0	0	0	0
HP Steam	0	0	0	0	0	0	0	0	0	0
Tipping Fee:										
New Biomass $0.00	0	0	0	0	0	0	0	0	0	0
Mill Residuals $0.00	0	0	0	0	0	0	0	0	0	0
Other $0.00	0	0	0	0	0	0	0	0	0	0
Total Revenue	$20,833	$21,562	$22,316	$23,098	$23,906	$24,743	$25,609	$26,505	$27,433	$28,393
LESS O&M EXPENSES										
Labor – Supervisory	1,072	1,110	1,149	1,189	1,230	1,273	1,318	1,364	1,412	1,461
Fixed Maintenance Materials	1,866	1,932	1,999	2,069	2,142	2,217	2,294	2,375	2,458	2,544
Insurance	1,541	1,595	1,651	1,709	1,769	1,831	1,895	1,961	2,030	2,101
Property Tax	296	276	256	238	222	206	192	178	166	154
Variable Labor	178	184	190	197	204	211	218	226	234	242
Variable Maintenance	586	607	628	650	673	696	721	748	772	799
Waste Disposal – Pretreatment	0	0	0	0	0	0	0	0	0	0
– Fermentation	0	0	0	0	0	0	0	0	0	0
– Solids Separation (Ash or Lignin)	95	99	103	107	111	116	121	125	130	138
Chemicals	1,447	1,498	1,550	1,604	1,661	1,719	1,779	1,841	1,906	1,972
Cellulose Enzyme	0	0	0	0	0	0	0	0	0	0
Process Water	0	0	0	0	0	0	0	0	0	0
Cooling Tower Makeup	1	1	1	1	1	1	2	2	2	2
Feedwater Makeup	1	1	1	1	1	1	1	1	1	1
Waste Water	0	0	0	0	0	0	0	0	0	0
#6 Fuel Oil (Supplemental)	(4,544)	(4,844)	(5,164)	(5,505)	(5,868)	(6,256)	(6,669)	(7,110)	(7,579)	(8,080)
#6 Fuel Oil (Backup)	1,270	1,354	1,443	1,538	1,640	1,748	1,864	1,987	2,118	2,258
Feedstock – New Biomass ($/ton) $14.00 $1.59 /MBtu	6,051	6,333	6,625	6,926	9,239	9,562	9,897	10,243	10,602	10,973
– Mill Residuals ($/ton) $6.00 $0.68	(185)	(191)	(198)	(205)	(212)	(220)	(227)	(235)	(244)	(252)
– Other ($/ton) $2.00 $0.23	0	0	0	0	0	0	0	0	0	0
Power (Purchased from Utility)	(3,772)	(3,904)	(4,041)	(4,182)	(4,329)	(4,480)	(4,637)	(4,799)	(4,967)	(5,141)
Gross Receipts Tax (Income Tax Deductible)	0	0	0	0	0	0	0	0	0	0
Total O&M Expenses	$7,905	$8,049	$8,194	$8,339	$8,483	$8,626	$8,767	$8,905	$9,039	$9,169
GROSS MARGIN	$12,928	$13,513	$14,123	$14,759	$15,423	$16,117	$16,842	$17,600	$18,393	$19,223
TAX DEPRECIATION	0	0	0	0	0	0	0	0	0	0
TAXABLE INCOME (Before Financing)	$12,928	$13,513	$14,123	$14,759	$15,423	$16,117	$16,842	$17,600	$18,393	$19,223
TAXES: Income	(4,777)	(4,993)	(5,218)	(5,453)	(5,699)	(5,955)	(6,223)	(6,503)	(6,796)	(7,103)
Invest Tax Credits: $0 $0 $0	$0	$0	$0	$0	$0	$0	$0	$0	$0	$0
Production Tax Credit (Ethanol) (Cogen.) (Wood)	$0	$0	$0	$0	$0	$0	$0	$0	$0	$0
INCOME AFTER TAX (Before Financing)	$8,151	$8,520	$8,904	$9,305	$9,724	$10,162	$10,619	$11,097	$11,597	$12,120
TAX DEPRECIATION	0	0	0	0	0	0	0	0	0	0
P.D.Cost Cap.Grant										
PLANT COST Base: $21,100 $0										
NET AFTER–TAX CASH FLOW Alternative: $97,900 ($59,150)	8,151	8,520	8,904	9,305	9,724	10,162	10,619	11,097	11,597	12,120
CUMULATIVE CASH FLOW	$51,045	$59,565	$68,469	$77,774	$87,499	$97,660	$108,279	$119,376	$130,973	$143,093
CUMULATIVE IRR (Before Financing)	20.27%	21.03%	21.62%	22.09%	22.46%	22.76%	23.01%	23.20%	23.36%	23.50%
CUMULATIVE NET PRESENT VALUE @ 12.0%	$12,587	$14,774	$16,815	$18,719	$20,496	$22,153	$23,700	$25,143	$26,489	$27,748

Table 4 – 4 A

CLIENT: WEYERHAEUSER
PROFORMA FINANCIAL STATEMENT

Incremental Plant(Alternate– Base)
Option #: 3 Less Option No.: 1
BGCC Tampella Process with Flue Gas Dryer plus Ethanol Plant (Amoco Process)
Less: Base Case – Bark Boiler Retrofit

08–Apr–95
02:40 PM

End of Year			1998	1999	2000	2001	2002	2003	2004	2005	2006	2007	2008
Years from P.D.			4	5	6	7	8	9	10	11	12	13	14
Operating Year			0	1	2	3	4	5	6	7	8	9	10
Capacity Factors – Mill				92.0%	92.0%	100.0%	92.0%	92.0%	92.0%	92.0%	92.0%	92.0%	92.0%
Energy Plant				85.0%	85.0%	85.0%	85.0%	85.0%	85.0%	85.0%	85.0%	85.0%	85.0%
Export Power				85.0%	85.0%	85.0%	85.0%	85.0%	85.0%	85.0%	85.0%	85.0%	85.0%
Feedstock Quantity (tons per year)				798,430	798,430	798,430	798,430	798,430	798,430	798,430	798,430	798,430	798,430
Ethanol Production (gallons per year)				24,509,750	24,509,750	24,509,750	24,509,750	24,509,750	24,509,750	24,509,750	24,509,750	24,509,750	24,509,750
CASH FLOW STATEMENT (PROJECT)	($1000's)												
REVENUE													
Commercial Products:													
Power	$0.0500	/kwh		8,622	8,924	9,237	9,560	9,894	10,241	10,599	10,970	11,354	11,751
Ethanol	$1.17	/gallon		34,059	35,251	36,484	37,761	39,083	40,451	41,867	43,332	44,849	46,418
Other				0	0	0	0	0	0	0	0	0	0
Lignin	$0.66	/MBtu		0	0	0	0	0	0	0	0	0	0
Weyerhaeuser Use:													
Power				0	0	0	0	0	0	0	0	0	0
LP Steam				0	0	0	0	0	0	0	0	0	0
HP Steam				0	0	0	0	0	0	0	0	0	0
Tipping Fee:													
New Biomass	$0.00			0	0	0	0	0	0	0	0	0	0
Mill Residuals	$0.00			0	0	0	0	0	0	0	0	0	0
Other	$0.00			0	0	0	0	0	0	0	0	0	0
Total Revenue				$42,681	$44,175	$45,721	$47,321	$48,977	$50,692	$52,466	$54,302	$56,203	$58,170
LESS O&M EXPENSES													
Labor – Supervisory				2,711	2,808	2,905	3,006	3,111	3,220	3,333	3,450	3,571	3,695
Fixed Maintenance Materials				2,667	2,667	3,071	3,179	3,290	3,405	3,524	3,648	3,775	3,908
Insurance				2,411	2,495	2,583	2,673	2,767	2,864	2,964	3,067	3,175	3,288
Property Tax				1,345	1,251	1,163	1,082	1,006	936	870	809	753	700
Variable Labor				126	130	135	140	144	150	155	160	166	172
Variable Maintenance				416	430	445	461	477	494	511	529	547	567
Waste Disposal – Pretreatment				0	0	0	0	0	0	0	0	0	0
– Fermentation				0	0	0	0	0	0	0	0	0	0
– Solids Separation (Ash or Lignin)				73	76	79	83	86	89	93	97	101	105
Chemicals				2,326	2,407	2,492	2,579	2,669	2,762	2,859	2,959	3,063	3,170
Cellulose Enzyme				19,414	20,094	20,797	21,525	22,278	23,058	23,865	24,700	25,565	26,460
Process Water				11	11	11	12	12	13	13	13	14	14
Cooling Tower Makeup				8	8	8	9	9	9	10	10	10	11
Feedwater Makeup				167	173	179	185	192	198	205	212	220	228
Waste Water				458	474	491	508	526	544	564	583	604	625
#6 Fuel Oil (Supplemental)				(2,397)	(2,555)	(2,724)	(2,904)	(3,096)	(3,300)	(3,518)	(3,750)	(3,998)	(4,262)
#6 Fuel Oil (Backup)				670	714	761	811	865	922	983	1,048	1,117	1,191
Feedstock – New Biomass	($/ton)	$14.00	$1.59 /MBtu	13,582	14,057	14,549	15,058	15,586	16,131	16,696	17,280	17,885	18,511
– Mill Residuals	($/ton)	$6.00	$0.68	(131)	(136)	(140)	(145)	(150)	(156)	(161)	(167)	(173)	(179)
– Other	($/ton)	$2.00	$0.23	0	0	0	0	0	0	0	0	0	0
Power (Purchased from Utility)				(2,674)	(2,768)	(2,865)	(2,965)	(3,069)	(3,176)	(3,287)	(3,402)	(3,522)	(3,645)
Gross Receipts Tax (Income Tax Deductible)				0	0	0	0	0	0	0	0	0	0
Total O&M Expenses				$41,383	$42,637	$43,941	$45,296	$46,703	$48,164	$49,678	$51,247	$52,872	$54,555
GROSS MARGIN				$1,298	$1,538	$1,780	$2,025	$2,274	$2,528	$2,788	$3,055	$3,331	$3,615
TAX DEPRECIATION				(17,830)	(28,528)	(17,117)	(10,270)	(10,270)	(5,135)	0	0	0	0
TAXABLE INCOME (Before Financing)				($16,532)	($26,990)	($15,337)	($8,245)	($7,996)	($2,607)	$2,788	$3,055	$3,331	$3,615
TAXES: Income				6,109	9,973	5,667	3,047	2,955	963	(1,030)	(1,129)	(1,231)	(1,336)
Invest Tax Credits:	$0	$0	$0	$0	$0	$0	$0	$0	$0	$0	$0	$0	$0
Production Tax Credit	(Ethanol)	(Cogen.)	(Wood)	$0	$0	$0	$0	$0	$0	$0	$0	$0	$0
INCOME AFTER TAX (Before Financing)				($10,423)	($17,017)	($9,670)	($5,199)	($5,042)	($1,644)	$1,758	$1,926	$2,100	$2,279
TAX DEPRECIATION		P.D.Cost	Cap.Grant	17,830	28,528	17,117	10,270	10,270	5,135	0	0	0	0
PLANT COST	Base:	$21,100	$0	(89,150)									
NET AFTER–TAX CASH FLOW	Alternative:	$189,800	($114,650)	($89,150)	7,407	11,511	7,447	5,072	5,229	3,491	1,758	1,926	2,100	2,279
CUMULATIVE CASH FLOW				($89,150)	($81,743)	($70,232)	($62,786)	($57,714)	($52,485)	($48,994)	($47,236)	($45,310)	($43,210)	($40,930)
CUMULATIVE IRR (Before Financing)					NA	NA	NA	NA	NA	NA	NA	NA	NA	NA
CUMULATIVE NET PRESENT VALUE @	12.0%			($89,150)	($82,537)	($73,381)	($68,060)	($64,837)	($61,870)	($60,101)	($59,306)	($58,528)	($57,771)	($57,037)

Table 4 – 4 B

CLIENT: WEYERHAEUSER
PROFORMA FINANCIAL STATEMENT

Incremental PLtant(Alternate– Base)
Option #: 3 Less Option No.: 1
BGCC Tampella Process with Flue Gas Dryer plus Ethanol Plant (Amoco Process)
Less: Base Case – Bark Boiler Retrofit

08–Apr–95
02:40 PM

End of Year			2009	2010	2011	2012	2013	2014	2015	2016	2017	2018
Years from P.D.			15	16	17	18	19	20	21	22	23	24
Operating Year			11	12	13	14	15	16	17	18	19	20
Capacity Factors – Mill			92.0%	92.0%	92.0%	92.0%	92.0%	92.0%	92.0%	92.0%	92.0%	92.0%
Energy Plant			85.0%	85.0%	85.0%	85.0%	85.0%	85.0%	85.0%	85.0%	85.0%	85.0%
Export Power			85.0%	85.0%	85.0%	85.0%	85.0%	85.0%	85.0%	85.0%	85.0%	85.0%
Feedstock Quantity (tons per year)			798,430	798,430	798,430	798,430	798,430	798,430	798,430	798,430	798,430	798,430
Ethanol Production (gallons per year)			24,509,750	24,509,750	24,509,750	24,509,750	24,509,750	24,509,750	24,509,750	24,509,750	24,509,750	24,509,750
CASH FLOW STATEMENT (PROJECT)	($1000's)											
REVENUE												
Commercial Products:												
Power	$0.0500	/kwh	12,163	12,588	13,029	13,485	13,957	14,446	14,951	15,474	16,016	16,577
Ethanol	$1.17	/gallon	48,043	49,724	51,465	53,266	55,130	57,060	59,057	61,124	63,263	65,478
Other			0	0	0	0	0	0	0	0	0	0
Lignin	$0.96	/MBtu	0	0	0	0	0	0	0	0	0	0
Weyerhaeuser Use:												
Power			0	0	0	0	0	0	0	0	0	0
LP Steam			0	0	0	0	0	0	0	0	0	0
HP Steam			0	0	0	0	0	0	0	0	0	0
Tipping Fee:												
New Biomass	$0.00		0	0	0	0	0	0	0	0	0	0
Mill Residuals	$0.00		0	0	0	0	0	0	0	0	0	0
Other	$0.00		0	0	0	0	0	0	0	0	0	0
Total Revenue			$80,206	$82,313	$84,494	$86,751	$89,088	$71,506	$74,008	$76,599	$79,279	$82,054
LESS O&M EXPENSES												
Labor – Supervisory			3,825	3,959	4,097	4,241	4,389	4,543	4,702	4,866	5,037	5,213
Fixed Maintenance Materials			4,044	4,186	4,332	4,484	4,641	4,803	4,971	5,145	5,326	5,512
Insurance			3,401	3,520	3,643	3,771	3,903	4,039	4,181	4,327	4,478	4,635
Property Tax			651	605	563	524	487	453	421	392	364	339
Variable Labor			178	184	190	197	204	211	218	226	234	242
Variable Maintenance			588	607	628	650	673	696	721	746	772	799
Waste Disposal – Pretreatment			0	0	0	0	0	0	0	0	0	0
– Fermentation			0	0	0	0	0	0	0	0	0	0
– Solids Separation (Ash or Lignin)			109	113	118	123	127	133	138	143	149	155
Chemicals			3,281	3,396	3,515	3,638	3,765	3,897	4,033	4,174	4,320	4,471
Cellulose Enzyme			27,388	28,344	29,338	30,363	31,426	32,525	33,664	34,842	36,062	37,324
Process Water			15	15	16	17	17	18	18	19	20	20
Cooling Tower Makeup			11	11	12	12	13	13	13	14	14	15
Feedwater Makeup			235	244	252	261	270	280	289	300	310	321
Waste Water			647	669	693	717	742	768	795	823	852	881
#6 Fuel Oil (Supplemental)			(4,544)	(4,844)	(5,164)	(5,505)	(5,868)	(6,256)	(6,669)	(7,110)	(7,579)	(8,080)
#6 Fuel Oil (Backup)			1,270	1,354	1,443	1,538	1,640	1,748	1,864	1,987	2,118	2,258
Feedstock – New Biomass	($/ton)	$14.00	$1.59 /MBtu	18,159	19,829	20,523	21,241	21,985	22,754	23,551	24,375	25,228	26,111
– Mill Residuals	($/ton)	$8.00	$0.68	(185)	(191)	(198)	(205)	(212)	(220)	(227)	(235)	(244)	(252)
– Other	($/ton)	$2.00	$0.23	0	0	0	0	0	0	0	0	0	0
Power (Purchased from Utility)				(3,772)	(3,904)	(4,041)	(4,182)	(4,328)	(4,480)	(4,637)	(4,799)	(4,967)	(5,141)
Gross Receipts Tax (Income Tax Deductible)				0	0	0	0	0	0	0	0	0	0
Total O&M Expenses				$56,296	$58,097	$59,859	$61,883	$63,872	$65,925	$68,048	$70,235	$72,493	$74,824
GROSS MARGIN				$3,910	$4,216	$4,535	$4,868	$5,216	$5,580	$5,962	$6,364	$6,786	$7,231
TAX DEPRECIATION				0	0	0	0	0	0	0	0	0	0
TAXABLE INCOME	(Before Financing)			$3,910	$4,216	$4,535	$4,868	$5,216	$5,580	$5,962	$6,364	$6,786	$7,231
TAXES: Income				(1,445)	(1,558)	(1,676)	(1,799)	(1,927)	(2,062)	(2,203)	(2,351)	(2,507)	(2,672)
Invest Tax Credits:	$0	$0	$0	$0	$0	$0	$0	$0	$0	$0	$0	$0	$0
Production Tax Credit	(Ethanol)	(Cogen.)	(Wood)	$0	$0	$0	$0	$0	$0	$0	$0	$0	$0	$0
INCOME AFTER TAX	(Before Financing)			$2,465	$2,658	$2,859	$3,069	$3,289	$3,518	$3,759	$4,012	$4,279	$4,559
TAX DEPRECIATION		P.D.Cost	Cap.Grant	0	0	0	0	0	0	0	0	0	0
PLANT COST	Base:	$21,100	$0										
NET AFTER–TAX CASH FLOW	Alternative:	$189,800	($114,650)	2,465	2,658	2,859	3,069	3,289	3,518	3,759	4,012	4,279	4,559
CUMULATIVE CASH FLOW				($38,485)	($35,807)	($32,947)	($29,878)	($26,589)	($23,071)	($19,312)	($15,299)	($11,021)	($6,462)
CUMULATIVE IRR (Before Financing)				NA	NA	NA	NA	NA	NA	NA	NA	NA	NA
CUMULATIVE NET PRESENT VALUE @	12.0%			($56,326)	($55,646)	($54,990)	($54,362)	($53,762)	($53,188)	($52,640)	($52,118)	($51,622)	($51,149)

Table 4 – 5 A

CLIENT: WEYERHAEUSER
PROFORMA FINANCIAL STATEMENT

Incremental PLIant(Alternate– Base)
Option #: 4 Less Option No.: 1
Bark Boiler Retrofit plus Ethanol Plant
Less: Base Case – Bark Boiler Retrofit

06–Apr–95
02:40 PM

End of Year			1998	1999	2000	2001	2002	2003	2004	2005	2006	2007	2008
Years from P.D.			4	5	6	7	8	9	10	11	12	13	14
Operating Year			0	1	2	3	4	5	6	7	8	9	10
Capacity Factors – Mill				92.0%	92.0%	100.0%	92.0%	92.0%	92.0%	92.0%	92.0%	92.0%	92.0%
Energy Plant				92.0%	92.0%	92.0%	92.0%	92.0%	92.0%	92.0%	92.0%	92.0%	92.0%
Export Power				92.0%	92.0%	92.0%	92.0%	92.0%	92.0%	92.0%	92.0%	92.0%	92.0%
Feedstock Quantity (tons per year)				621,098	621,098	621,098	621,098	621,098	621,098	621,098	621,098	621,098	621,098
Ethanol Production (gallons per year)				26,528,200	26,528,200	26,528,200	26,528,200	26,528,200	26,528,200	26,528,200	26,528,200	26,528,200	26,528,200
CASH FLOW STATEMENT (PROJECT)	($1000's)												
REVENUE													
Commercial Products:													
Power	$0.0500	/kwh		0	0	0	0	0	0	0	0	0	0
Ethanol	$1.17	/gallon		38,663	38,154	39,489	40,871	42,302	43,782	45,315	46,901	48,542	50,241
Other				0	0	0	0	0	0	0	0	0	0
Lignin	$0.96	/MBtu		2,958	3,061	3,168	3,279	3,394	3,513	3,636	3,763	3,895	4,031
Weyerhaeuser Use:													
Power				0	0	0	0	0	0	0	0	0	0
LP Steam				0	0	0	0	0	0	0	0	0	0
HP Steam				0	0	0	0	0	0	0	0	0	0
Tipping Fee:													
New Biomass	$0.00			0	0	0	0	0	0	0	0	0	0
Mill Residuals	$0.00			0	0	0	0	0	0	0	0	0	0
Other	$0.00			0	0	0	0	0	0	0	0	0	0
Total Revenue				$39,621	$41,215	$42,657	$44,150	$45,696	$47,295	$48,950	$50,664	$52,437	$54,272
LESS O&M EXPENSES													
Labor – Supervisory				1,523	1,578	1,631	1,688	1,747	1,808	1,872	1,937	2,005	2,075
Fixed Maintenance Materials				1,544	1,598	1,654	1,712	1,772	1,834	1,898	1,964	2,033	2,104
Insurance				1,390	1,438	1,489	1,541	1,595	1,650	1,708	1,768	1,830	1,894
Property Tax				772	718	668	621	578	537	500	465	432	402
Variable Labor				0	0	0	0	0	0	0	0	0	0
Variable Maintenance				0	0	0	0	0	0	0	0	0	0
Waste Disposal – Pretreatment				0	0	0	0	0	0	0	0	0	0
– Fermentation				0	0	0	0	0	0	0	0	0	0
– Solids Separation (Ash or Lignin)				0	0	0	0	0	0	0	0	0	0
Chemicals				0	0	0	0	0	0	0	0	0	0
Cellulose Enzyme				21,013	21,748	22,510	23,297	24,113	24,957	25,830	26,734	27,670	28,639
Process Water				11	12	12	13	13	14	14	15	15	16
Cooling Tower Makeup				7	8	8	8	9	9	9	9	10	10
Feedwater Makeup				181	187	194	201	208	215	222	230	238	247
Waste Water				496	514	532	550	569	589	610	631	653	676
#6 Fuel Oil (Supplemental)				3,629	3,688	4,124	4,396	4,686	4,996	5,326	5,678	6,053	6,452
#6 Fuel Oil (Backup)				0	0	0	0	0	0	0	0	0	0
Feedstock – New Biomass ($/ton)	$14.00		$1.59 /MBtu	10,327	10,689	11,063	11,450	11,851	12,266	12,695	13,139	13,599	14,075
– Mill Residuals ($/ton)	$8.00		$0.88	0	0	0	0	0	0	0	0	0	0
– Other ($/ton)	$2.00		$0.23	0	0	0	0	0	0	0	0	0	0
Power (Purchased from Utility)				6,823	7,062	7,309	7,565	7,829	8,103	8,387	8,680	8,984	9,299
Gross Receipts Tax (Income Tax Deductible)				0	0	0	0	0	0	0	0	0	0
Total O&M Expenses				$47,716	$49,418	$51,192	$53,042	$54,969	$56,978	$59,071	$61,251	$63,523	$65,889
GROSS MARGIN				($7,895)	($8,203)	($8,535)	($8,891)	($9,274)	($9,683)	($10,121)	($10,588)	($11,086)	($11,617)
TAX DEPRECIATION				(9,150)	(14,640)	(8,784)	(5,270)	(5,270)	(2,635)	0	0	0	0
TAXABLE INCOME (Before Financing)				($17,045)	($22,843)	($17,319)	($14,162)	($14,544)	($12,318)	($10,121)	($10,588)	($11,086)	($11,617)
TAXES: Income				6,298	8,440	6,399	5,233	5,374	4,552	3,740	3,912	4,096	4,292
Invest Tax Credits: $0	$0	$0		$0	$0	$0	$0	$0	$0	$0	$0	$0	$0
Production Tax Credit (Ethanol)	(Cogen.)	(Wood)		$0	$0	$0	$0	$0	$0	$0	$0	$0	$0
INCOME AFTER TAX (Before Financing)				($10,747)	($14,402)	($10,919)	($8,929)	($9,170)	($7,767)	($6,381)	($6,676)	($6,990)	($7,324)
TAX DEPRECIATION	P.D.Cost	Cap.Grant		9,150	14,640	8,784	5,270	5,270	2,635	0	0	0	0
PLANT COST Base:	$21,100	$0	(45,750)										
NET AFTER–TAX CASH FLOW Alternative:	$117,900	($71,250)	($45,750)	(1,597)	238	(2,135)	(3,659)	(3,900)	(5,132)	(6,381)	(6,676)	(6,990)	(7,324)
CUMULATIVE CASH FLOW			($45,750)	($47,347)	($47,109)	($49,245)	($52,903)	($56,803)	($61,934)	($68,315)	($74,991)	($81,981)	($89,305)
CUMULATIVE IRR (Before Financing)				NA	NA	NA	NA	NA	NA	NA	NA	NA	NA
CUMULATIVE NET PRESENT VALUE @	12.0%		($45,750)	($47,176)	($46,888)	($48,506)	($50,831)	($53,044)	($55,644)	($58,530)	($61,227)	($63,747)	($66,105)

Table 4 – 5 B

CLIENT: WEYERHAEUSER
PROFORMA FINANCIAL STATEMENT

Incremental PLIant(Alternate– Base)
Option #: 4 Less Option No.: 1
Bark Boiler Retrofit plus Ethanol Plant
Less: Base Case – Bark Boiler Retrofit

06–Apr–95
02:40 PM

End of Year	2009	2010	2011	2012	2013	2014	2015	2016	2017	2018
Years from P.D.	15	16	17	18	19	20	21	22	23	24
Operating Year	11	12	13	14	15	16	17	18	19	20
Capacity Factors – Mill	92.0%	92.0%	92.0%	92.0%	92.0%	92.0%	92.0%	92.0%	92.0%	92.0%
Energy Plant	92.0%	92.0%	92.0%	92.0%	92.0%	92.0%	92.0%	92.0%	92.0%	92.0%
Export Power	92.0%	92.0%	92.0%	92.0%	92.0%	92.0%	92.0%	92.0%	92.0%	92.0%
Feedstock Quantity (tons per year)	621,098	621,098	621,098	621,098	621,098	621,098	621,098	621,098	621,098	621,098
Ethanol Production (gallons per year)	26,528,200	26,528,200	26,528,200	26,528,200	26,528,200	26,528,200	26,528,200	26,528,200	26,528,200	26,528,200
CASH FLOW STATEMENT (PROJECT) ($1000's)										
REVENUE										
Commercial Products:										
Power $0.0500 /kwh	0	0	0	0	0	0	0	0	0	0
Ethanol $1.17 /gallon	51,899	53,819	55,703	57,653	59,671	61,759	63,921	66,158	68,473	70,870
Other	0	0	0	0	0	0	0	0	0	0
Lignin $0.96 /MBtu	4,172	4,318	4,469	4,626	4,788	4,955	5,129	5,308	5,494	5,688
Weyerhaeuser Use:										
Power	0	0	0	0	0	0	0	0	0	0
LP Steam	0	0	0	0	0	0	0	0	0	0
HP Steam	0	0	0	0	0	0	0	0	0	0
Tipping Fee:										
New Biomass $0.00	0	0	0	0	0	0	0	0	0	0
Mill Residuals $0.00	0	0	0	0	0	0	0	0	0	0
Other $0.00	0	0	0	0	0	0	0	0	0	0
Total Revenue	$56,172	$58,138	$60,172	$62,278	$64,458	$66,714	$69,049	$71,466	$73,967	$76,556
LESS O&M EXPENSES										
Labor – Supervisory	2,148	2,223	2,301	2,381	2,465	2,551	2,640	2,733	2,828	2,927
Fixed Maintenance Materials	2,178	2,254	2,333	2,415	2,499	2,587	2,677	2,771	2,868	2,968
Insurance	1,960	2,029	2,100	2,173	2,249	2,328	2,410	2,494	2,581	2,671
Property Tax	374	348	323	301	280	260	242	225	209	194
Variable Labor	0	0	0	0	0	0	0	0	0	0
Variable Maintenance	0	0	0	0	0	0	0	0	0	0
Waste Disposal – Pretreatment	0	0	0	0	0	0	0	0	0	0
– Fermentation	0	0	0	0	0	0	0	0	0	0
– Solids Separation (Ash or Lignin)	0	0	0	0	0	0	0	0	0	0
Chemicals	0	0	0	0	0	0	0	0	0	0
Cellulose Enzyme	29,641	30,678	31,752	32,863	34,014	35,204	36,436	37,711	39,031	40,397
Process Water	16	17	17	18	19	19	20	21	21	22
Cooling Tower Makeup	10	11	11	12	12	12	13	13	14	14
Feedwater Makeup	255	264	273	283	293	303	314	325	336	348
Waste Water	700	724	750	776	803	831	860	890	922	954
#6 Fuel Oil (Supplemental)	6,879	7,333	7,817	8,334	8,884	9,471	10,096	10,763	11,474	12,232
#6 Fuel Oil (Backup)	0	0	0	0	0	0	0	0	0	0
Feedstock – New Biomass ($/ton) $14.00 $1.59 /MBtu	14,568	15,078	15,605	16,152	16,717	17,302	17,908	18,534	19,183	19,854
– Mill Residuals ($/ton) $8.00 $0.88	0	0	0	0	0	0	0	0	0	0
– Other ($/ton) $2.00 $0.23	0	0	0	0	0	0	0	0	0	0
Power (Purchased from Utility)	9,624	9,961	10,310	10,671	11,044	11,431	11,831	12,245	12,673	13,117
Gross Receipts Tax (Income Tax Deductible)	0	0	0	0	0	0	0	0	0	0
Total O&M Expenses	$68,353	$70,920	$73,593	$76,378	$79,278	$82,299	$85,448	$88,725	$92,141	$95,700
GROSS MARGIN	($12,181)	($12,782)	($13,421)	($14,099)	($14,820)	($15,585)	($16,397)	($17,259)	($18,174)	($19,144)
TAX DEPRECIATION	0	0	0	0	0	0	0	0	0	0
TAXABLE INCOME (Before Financing)	($12,181)	($12,782)	($13,421)	($14,099)	($14,820)	($15,585)	($16,397)	($17,259)	($18,174)	($19,144)
TAXES: Income	4,501	4,723	4,959	5,210	5,476	5,759	6,059	6,377	6,715	7,074
Invest Tax Credits: $0 $0 $0	$0	$0	$0	$0	$0	$0	$0	$0	$0	$0
Production Tax Credit (Ethanol) (Cogen.) (Wood)	$0	$0	$0	$0	$0	$0	$0	$0	$0	$0
INCOME AFTER TAX (Before Financing)	($7,680)	($8,059)	($8,462)	($8,889)	($9,344)	($9,826)	($10,338)	($10,882)	($11,459)	($12,070)
TAX DEPRECIATION	0	0	0	0	0	0	0	0	0	0
P.D.Cost Cap.Grant										
PLANT COST Base: $21,100 $0										
NET AFTER–TAX CASH FLOW Alternative: $117,900 ($71,250)	(7,680)	(8,059)	(8,462)	(8,889)	(9,344)	(9,826)	(10,338)	(10,882)	(11,459)	(12,070)
CUMULATIVE CASH FLOW	($99,985)	($105,045)	($113,506)	($122,396)	($131,739)	($141,569)	($151,904)	($162,786)	($174,245)	($186,315)
CUMULATIVE IRR (Before Financing)	NA	NA	NA	NA	NA	NA	NA	NA	NA	NA
CUMULATIVE NET PRESENT VALUE @ 12.0%	($68,313)	($70,382)	($72,321)	($74,140)	($75,847)	($77,450)	($78,956)	($80,371)	($81,701)	($82,952)

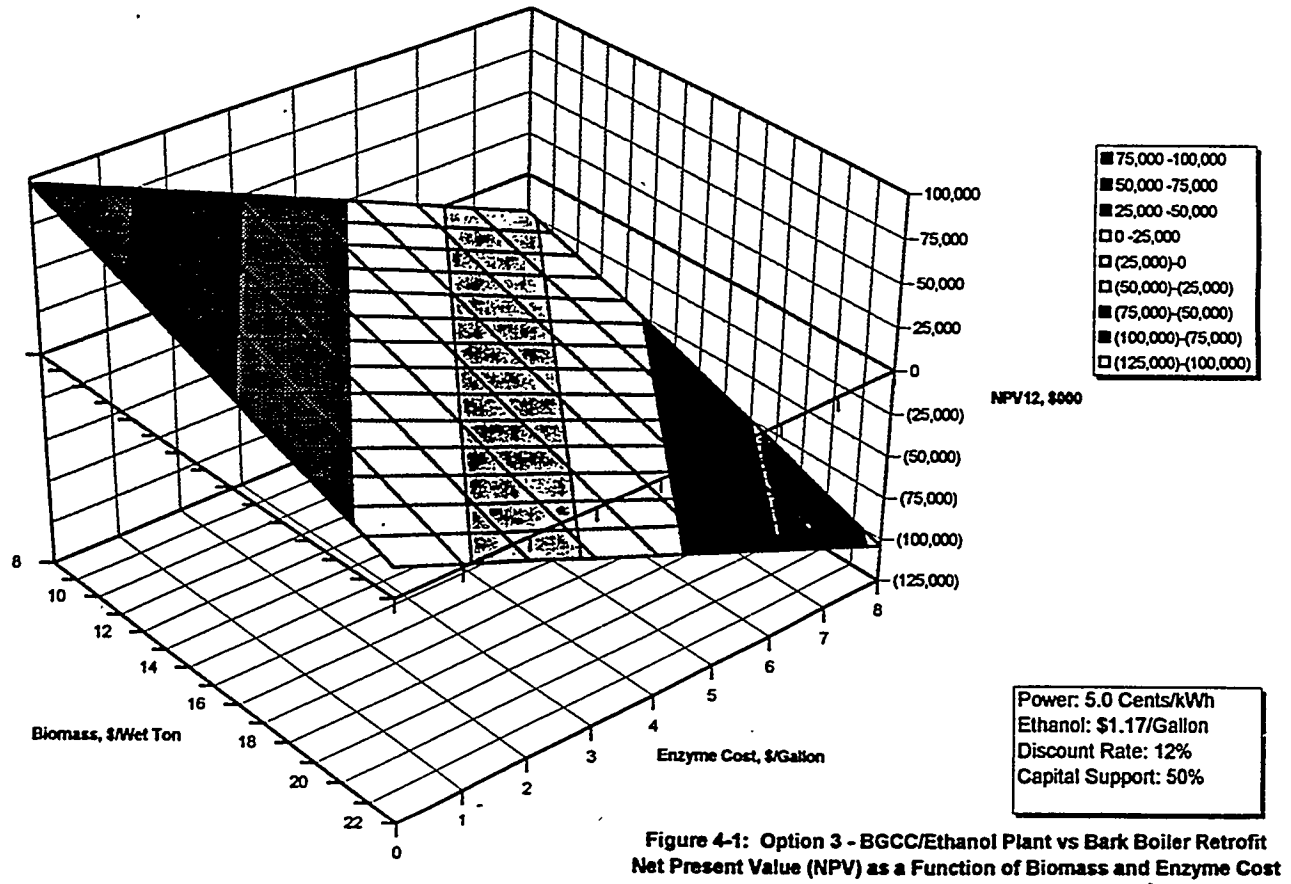

Figure 4-1: Option 3 - BGCC/Ethanol Plant vs Bark Boiler Retrofit
Net Present Value (NPV) as a Function of Biomass and Enzyme Cost

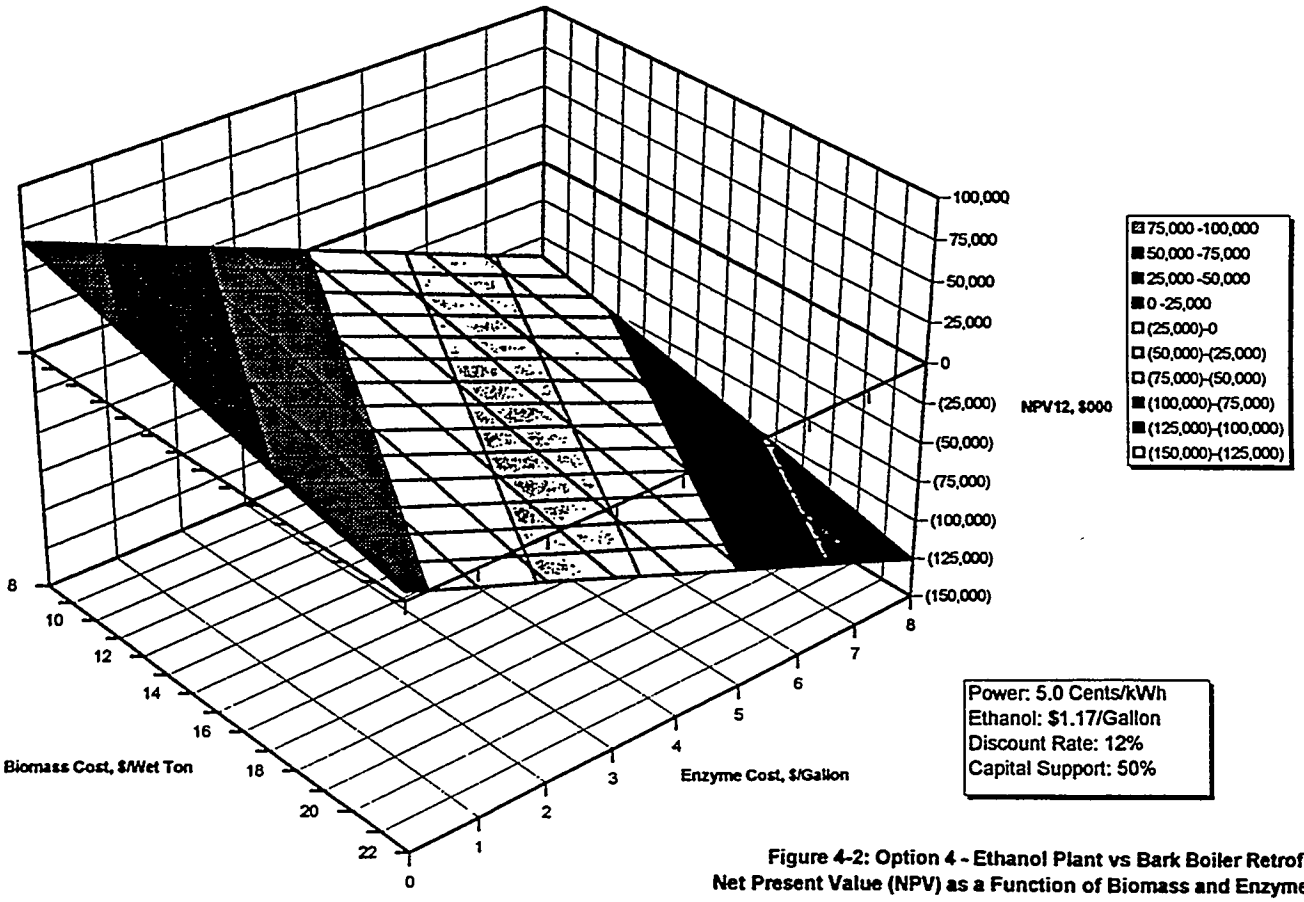

Figure 4-2: Option 4 - Ethanol Plant vs Bark Boiler Retrofit
Net Present Value (NPV) as a Function of Biomass and Enzyme Costs

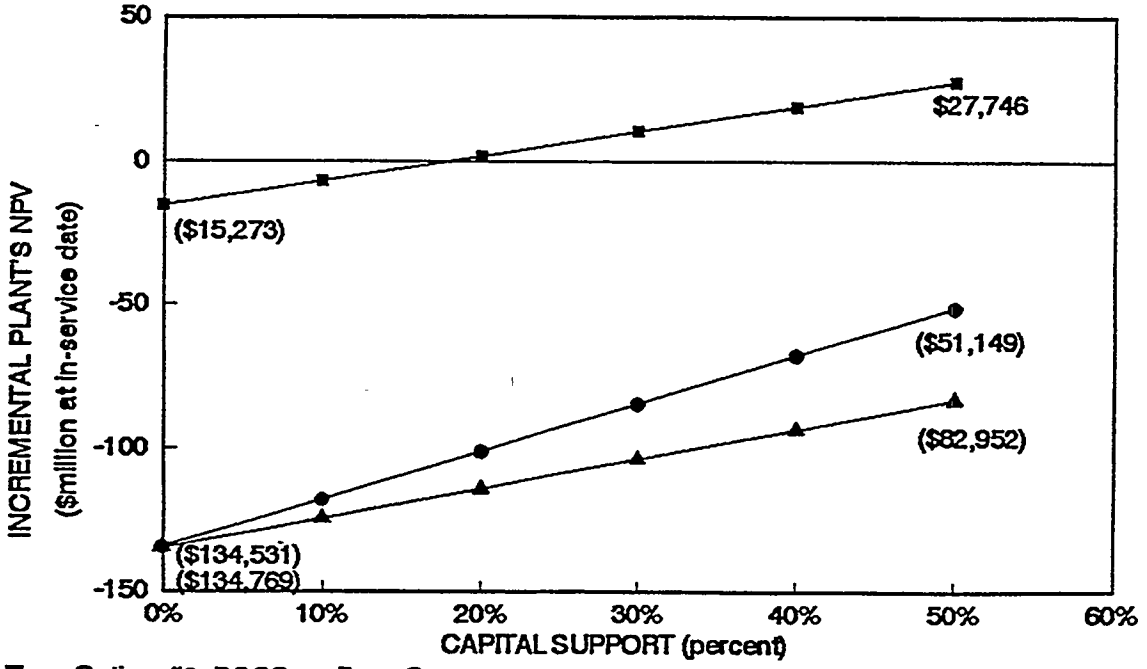

Figure 4-3
Sensitivity of Incremental Plant's NPV to the Capital Support

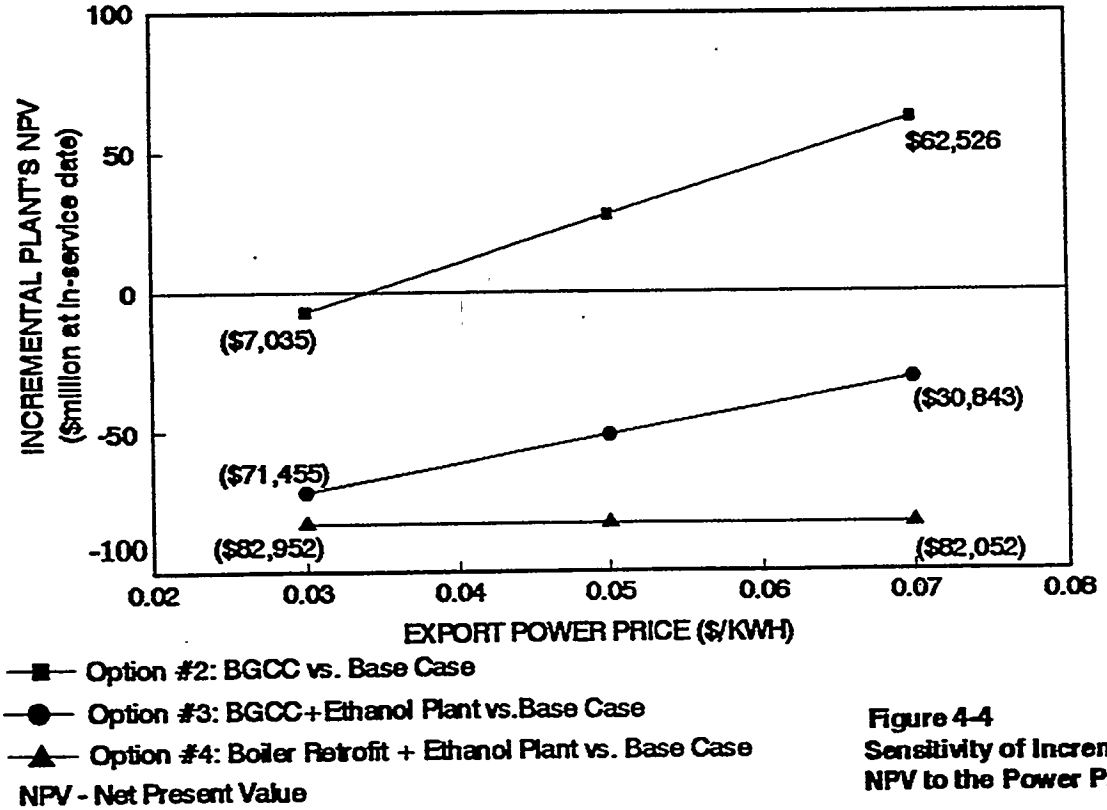

Figure 4-4
Sensitivity of Incremental Plant's NPV to the Power Price

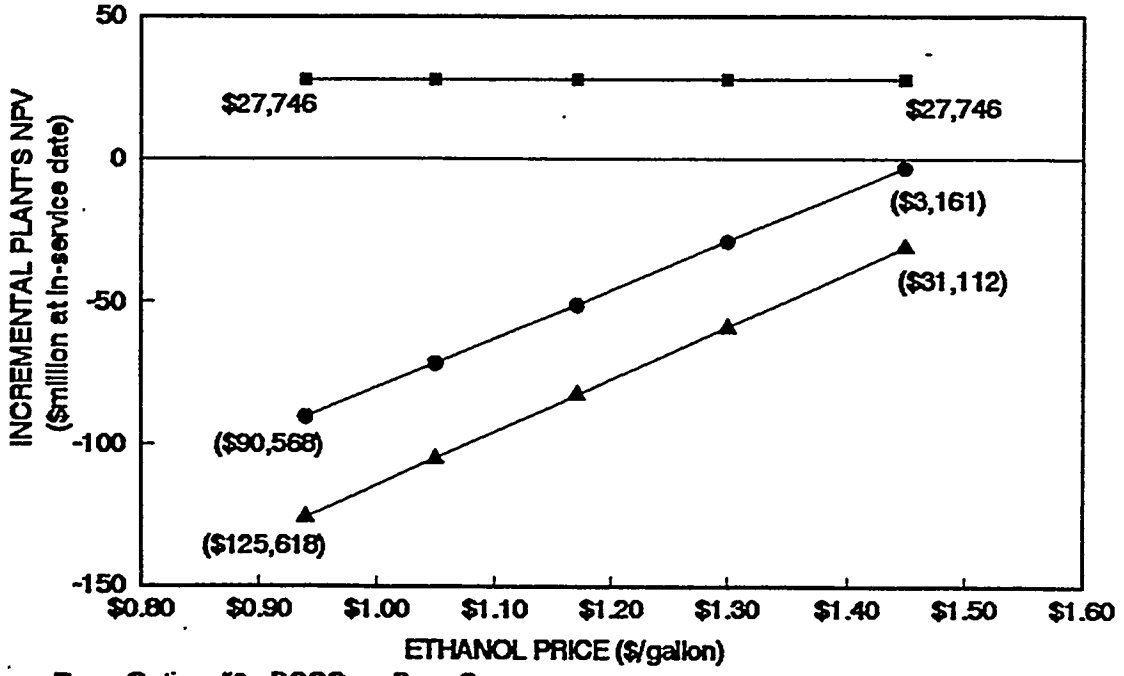

Figure 4-5
Sensitivity of Incremental Plant's NPV to the Ethanol Price

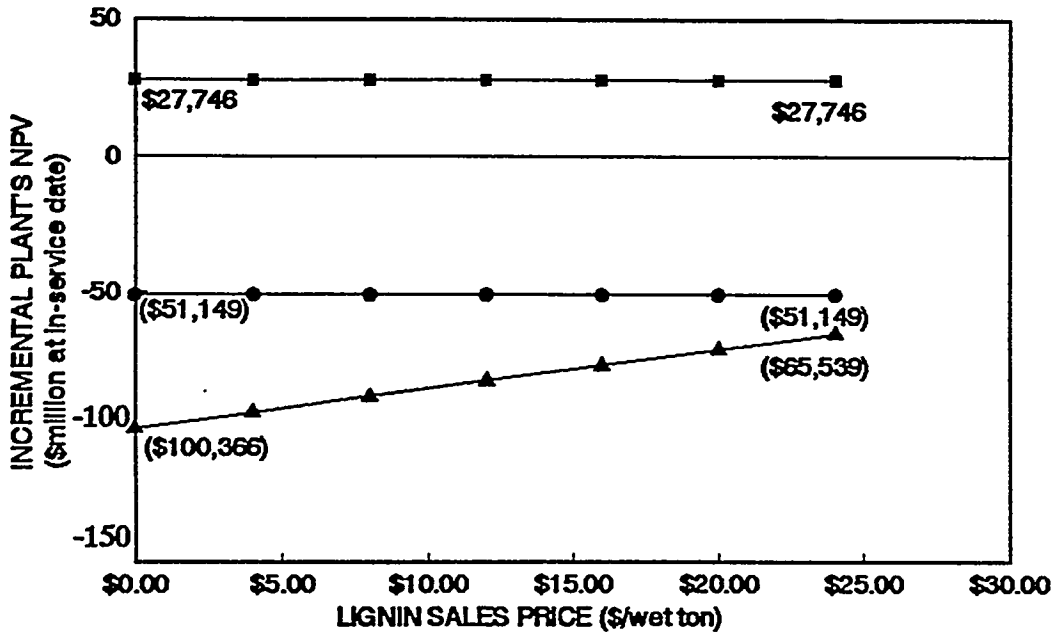

Figure 4-6
Sensitivity of the Incremental Plant's NPV to the Lignin Sales Price

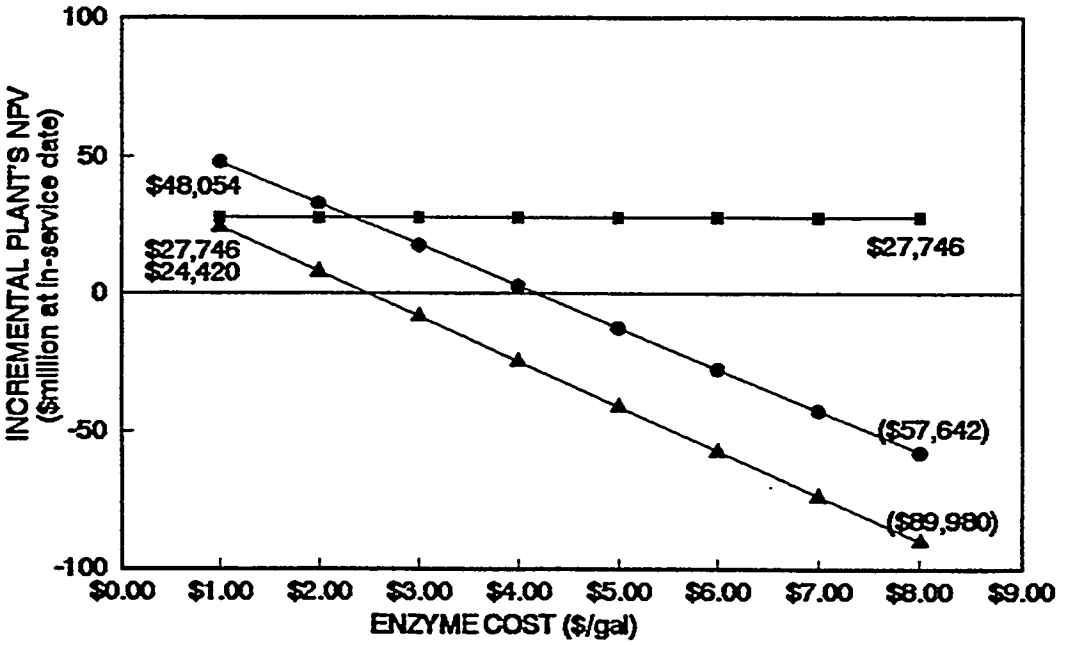

Figure 4-7
Sensitivity of Incremental Plant's NPV to the Enzyme Cost

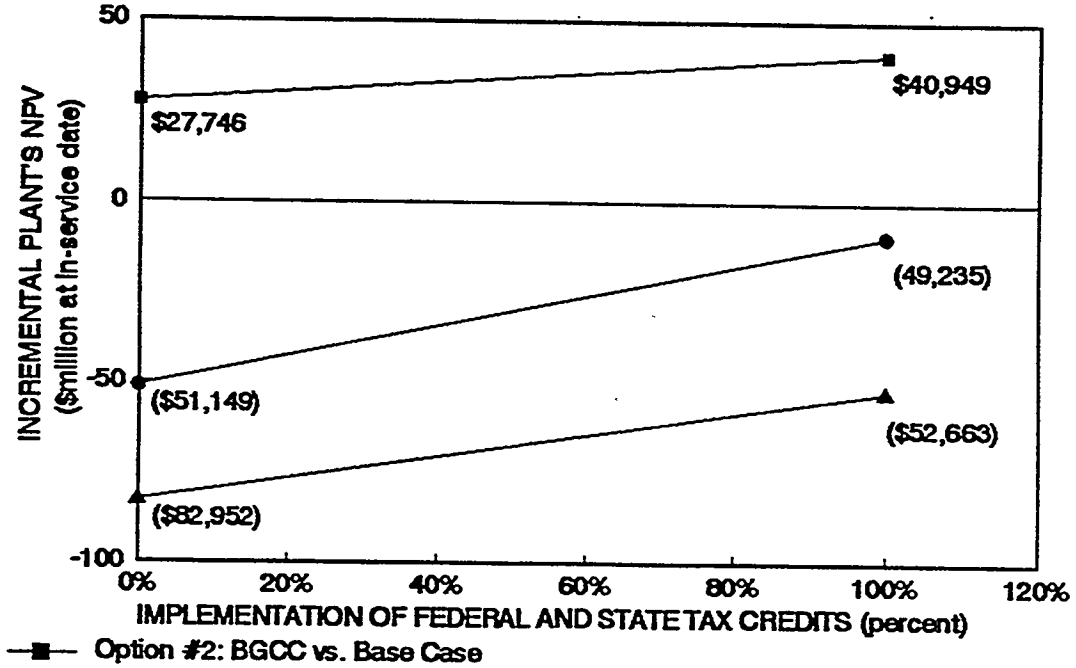

Figure 4-8
Sensitivity of Incremental Plant's NPV to the Tax Credits

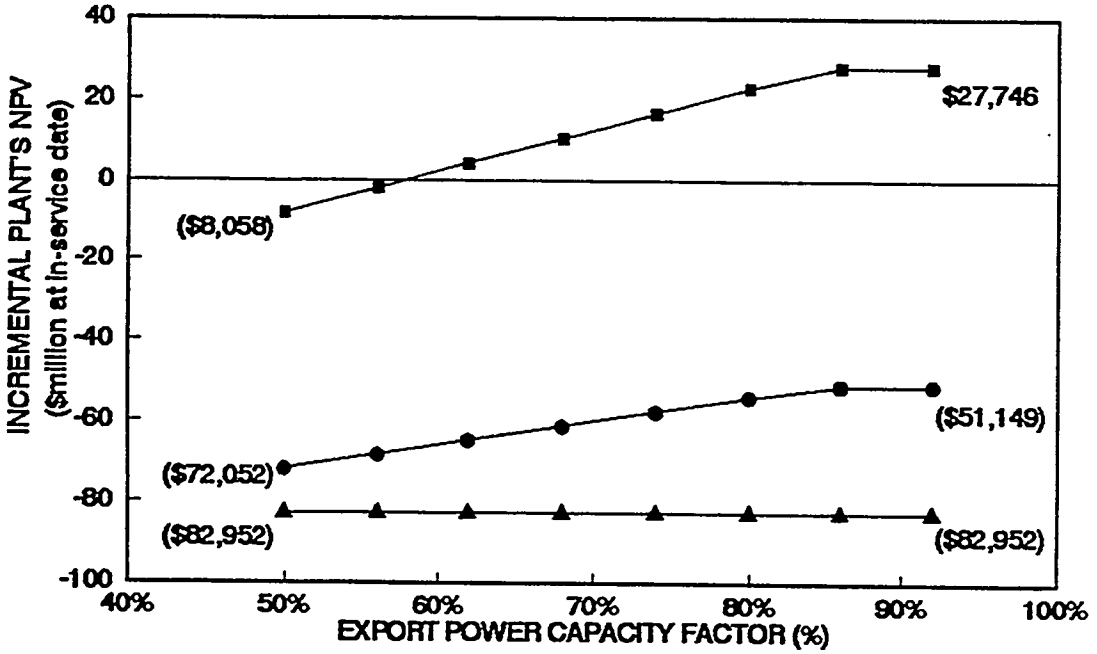

—■— Option #2: BGCC vs. Base Case
—●— Option #3: BGCC+Ethanol Plant vs.Base Case
—▲— Option #4: Boiler Retrofit + Ethanol Plant vs. Base Case

NPV - NetPresent Value
Export power capacity factor is limited by the energy plant capacity factor; thus the curve levels off

Figure 4-9
Sensitivity of Incremental Plant's NPV to the Export Power Capacity Factor

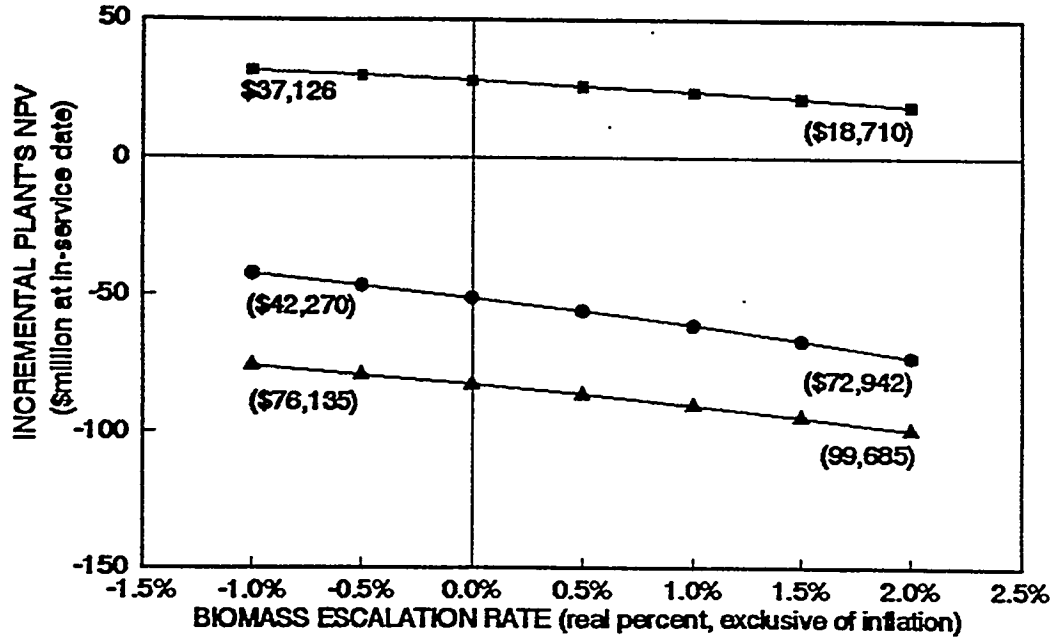

—■— Option #2: BGCC vs. Base Case
—●— Option #3: BGCC+Ethanol Plant vs. Base Case
—▲— Option #4: Boiler Retrofit + Ethanol Plant vs. Base Case

NPV - Net Present Value

Figure 4-10
Sensitivity of Plant's NPV to the Biomass Escalation Rate

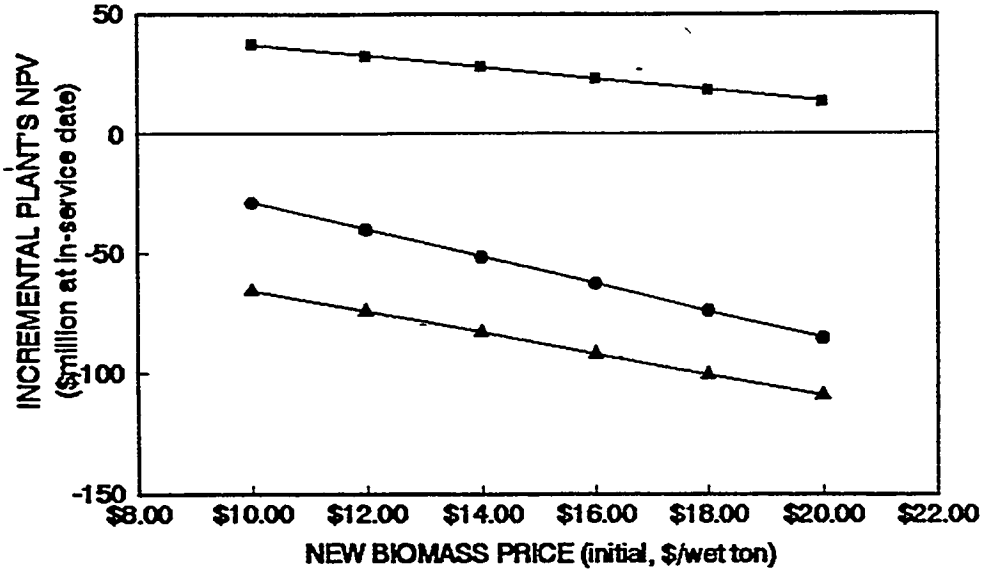

NPV - Net Present Value
The price of mill residual biomass is a constant percentage of new biomass price

Figure 4-11
Sensitivity of Incremental Plant's to the Initial Biomass Price

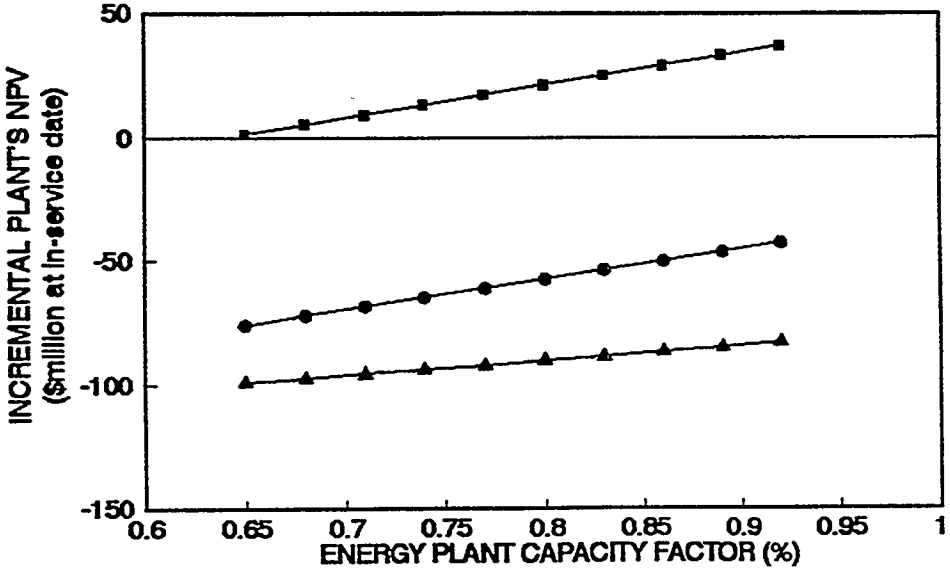

NPV - Net Present Value

Figure 4-12
Sensitivity of Incremental Plant's NPV to the Energy Plant Capacity Factor

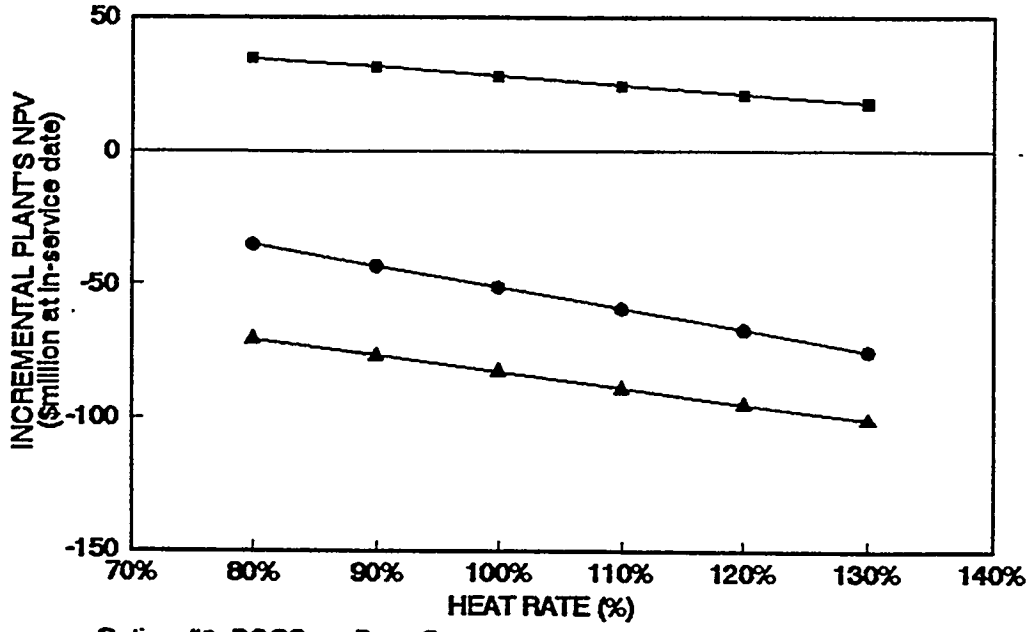

Figure 4-13
Sensitivity of Incremental Plant's NPV to the Plant Performance

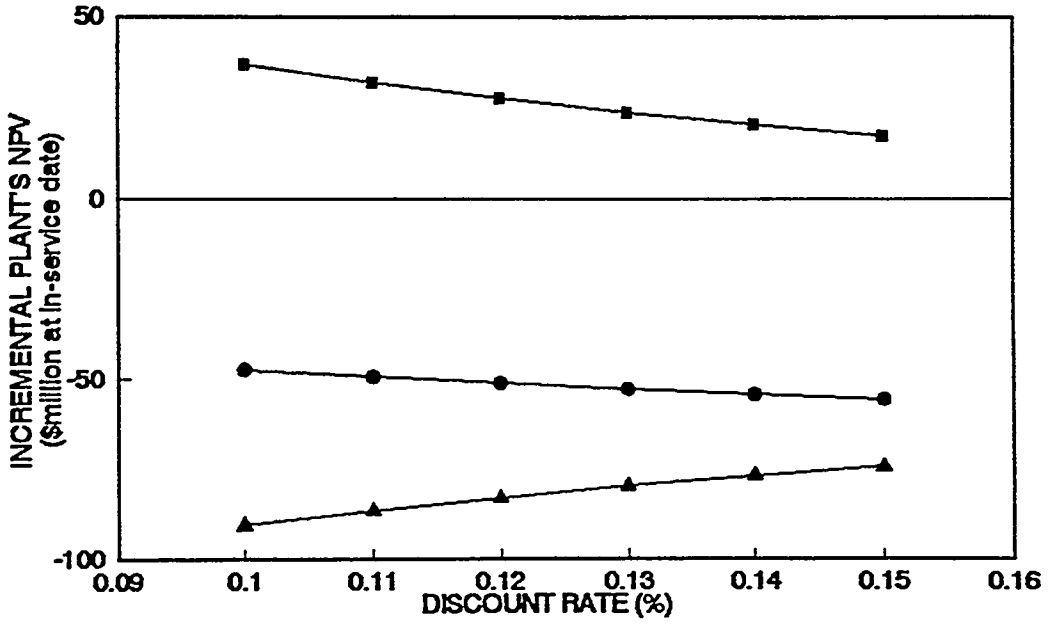

Figure 4-14
Sensitivity of Incremental Plant's NPV to the Discount Rate

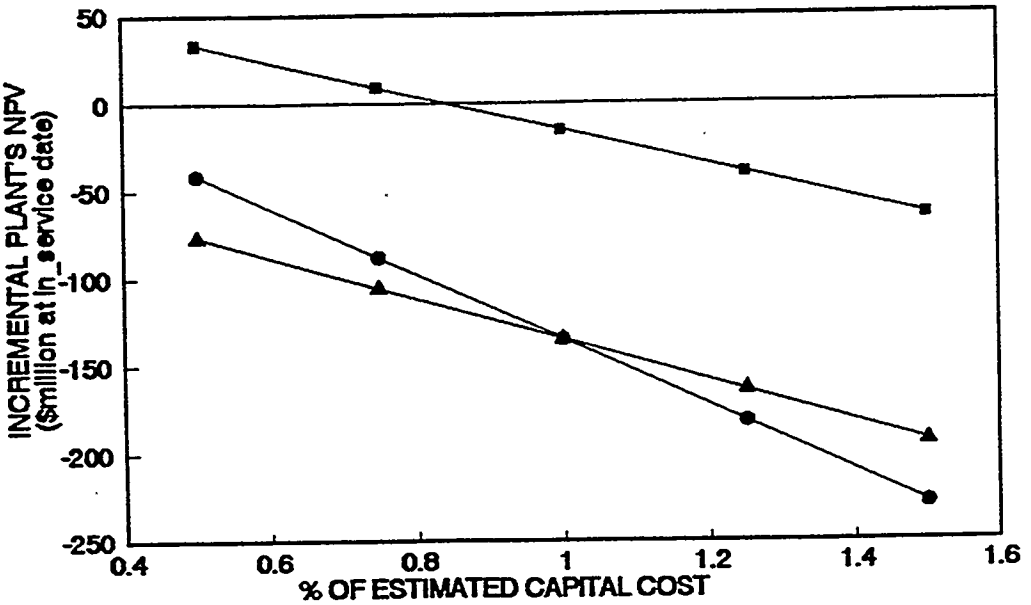

Figure 4-15
Sensitivity of Incremental Plant's NPV to the Capital Cost

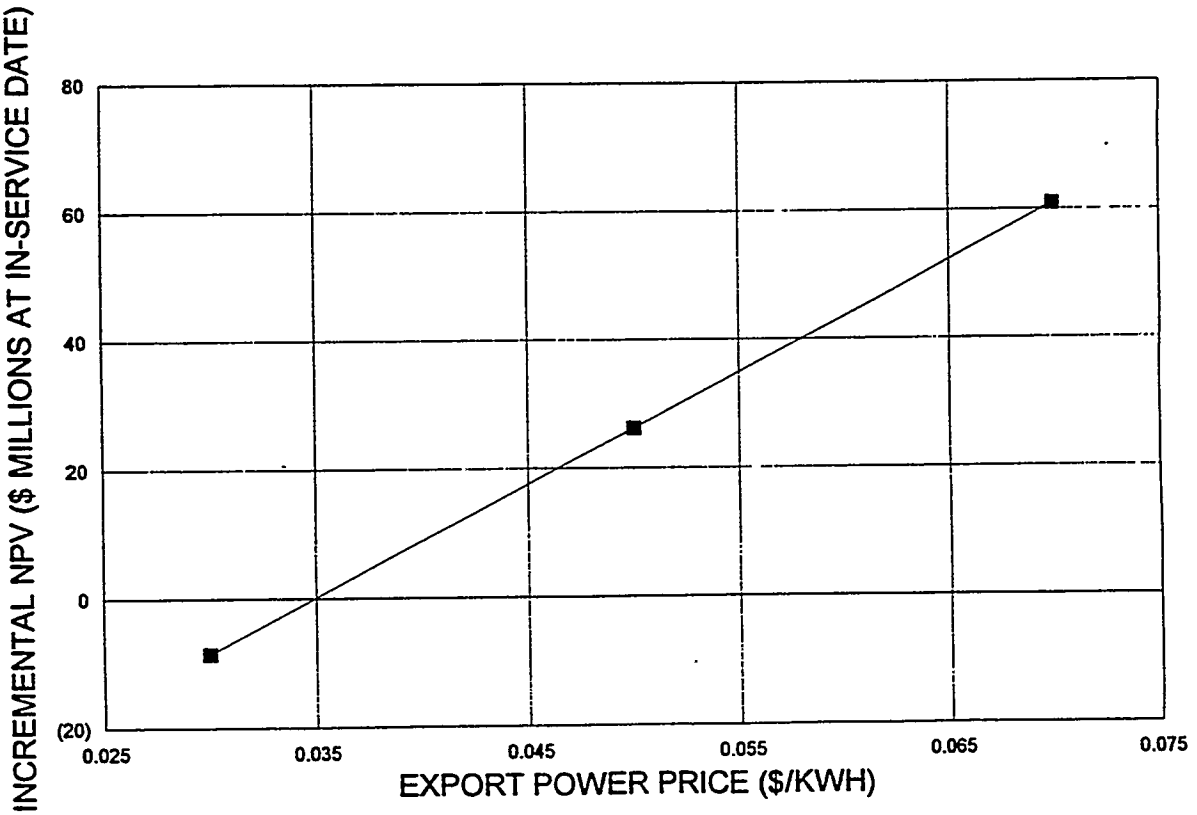

Figure 4-16: BGCC NPV Minus New Boiler NPV vs. Power Sales Price

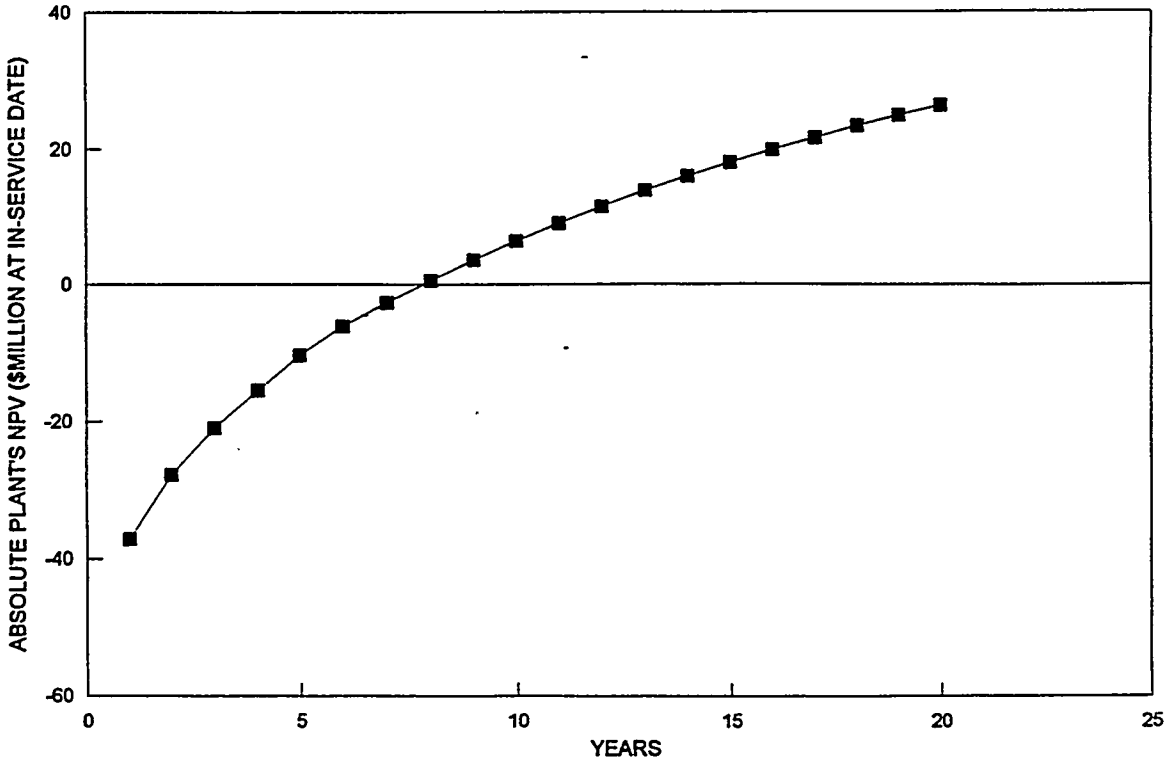

Figure 4-17: BGCC NPV With $0.05/kWh Power Sales Minus New Boiler NPV Over Project Life

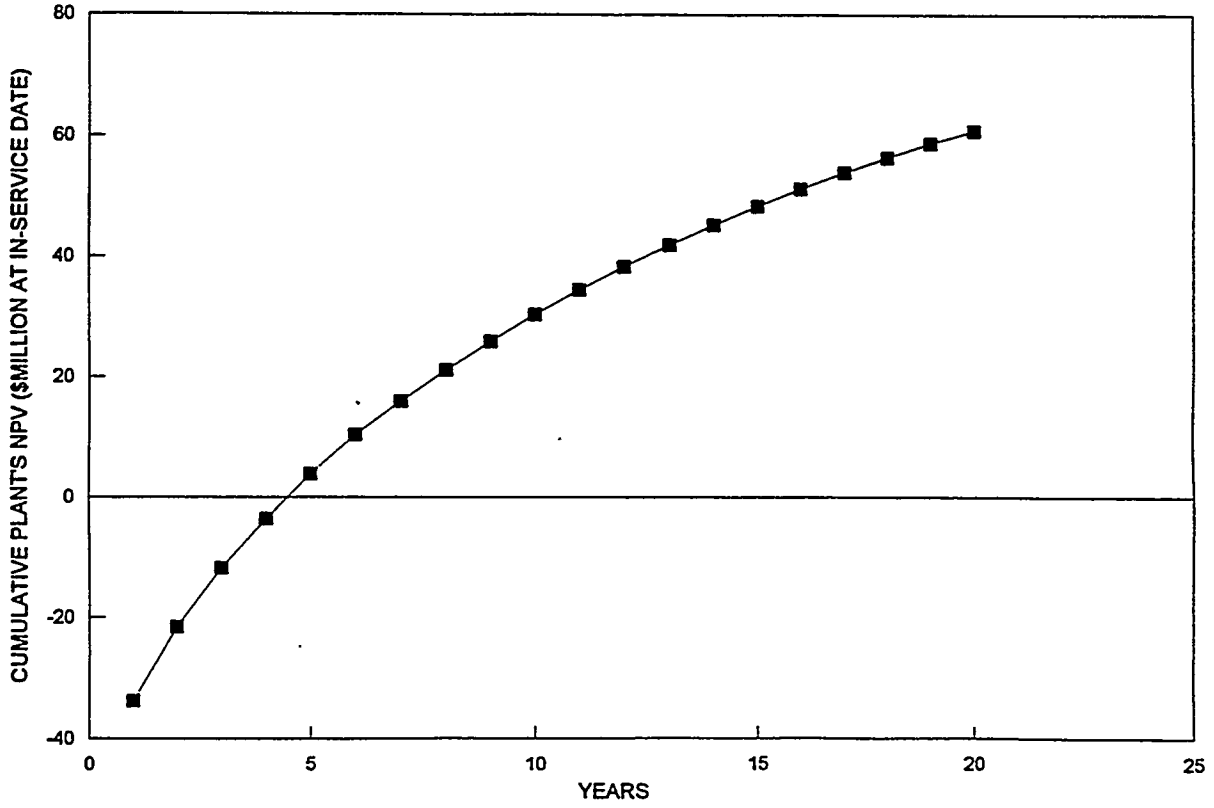

Figure 4-18: BGCC NPV With $0.07/kWh Power Sales Minus New Boiler NPV Over Project Life

Section 5

Environmental Monitoring Plan

New Bern plant environmental issues have been addressed in discussions in Section 2. Plant related operations are integrated in a comprehensive environmental monitoring program.

5.1 Timberlands Environmental Monitoring

This section presents an overview of the Weyerhaeuser forestry' commitment to sustainable forestry, the planned harvest procedures, the policies on which these procedures are based and the audit program at both the corporate and day-to-day operating levels to ensure the environmental quality and health of the forests. These procedures and audit programs are shown to be adequate to serve the additional harvest needs imposed by implementation of a biomass gasification combined cycle facility or a combination biomass combined cycle facility with an ethanol from biomass plant.

Weyerhaeuser is committed to the sustainability of its forestlands and consequently to the environmental quality and health of these forestlands. This is strongly expressed in *The Weyerhaeuser Forestry Stewardship Statement*. This statement consists of three segments as follows.

Our commitment:

- *To continuously improve our performance as responsible stewards of the environmental quality and economic value of the forests we manage.*
- *To actively listen to and act upon public expectations.*
- *To communicate consistently to ensure understanding of our forest stewardship goals, practices and accomplishments.*

What our commitment means:

We will manage our forestlands for the production of wood. In addition, our goals are to protect, maintain or enhance other important environmental values, such as:

- *Water quality and fish habitat.*
- *Wildlife habitat.*
- *The productivity of the soil.*
- *Aesthetics.*
- *Plant and animal species diversity.*
- *Culturally or historically unique areas.*

We will accomplish this by:

- *Practicing sustainable forestry to meet increasing worldwide demand for wood and wood products.*
- *Performing to standards set for all forestry operations.*
- *Basing our management processes and practices on scientific research and technology.*

- *Leading cooperative efforts with public agencies and other groups interested in forest resources to develop balanced, cost-effective forest practices and regulations based on sound scientific standards.*
- *Meeting specific resource goals set by our regional Forest Councils.*

Weyerhaeuser has for a number of years had a broad-based environmental monitoring program covering forestry, air, and water issues. Monitoring is done by mill and research staff, Corporate and Timberlands R&D organizations, local universities under contract to Weyerhaeuser, and by the State of North Carolina DNR and U.S. EPA. These studies are for the purposes of determining compliance with existing permits, regulations and standards in order to understand the impacts of our operations on the environment and to identify, understand and assess potential areas of future concern and action.

The Timberlands Environmental Stewardship Audit was implemented in 1988. The purpose of the audit at the corporate level is to provide one more independent check and evaluation of the Weyerhaeuser policies regarding forestry operations. It covers all fee (Weyerhaeuser owned) timberlands in the United States. In the Southern States forest operations are conducted, on a voluntary basis, in accordance to Forestry Best Management Practices (BMP) as promulgated by the North Carolina Division of Forest Resources, Department of Environment, Health and Natural Resources. In addition, internal Weyerhaeuser Forestry standards, developed by the region Forest Councils, complement state regulations and the voluntary state BMP programs. The Corporate Timberlands environmental audit concentrates on assessing compliance with Best Management Practices (BMPs), forest practices regulations and Weyerhaeuser Forestry standards. Nineteen performance areas, checklist items, are currently audited. Point source facilities, such as truck shops, sorting yards, nurseries and seed orchards are audited by a specific facilities audit program.

The Corporate Environmental Stewardship Audit Performance evaluates the following items:

Forest Practices Citations
Forest Council Resource Goals
Smoke Management
Road Construction
Agency Relations
Site Preparation
Chemicals/Fertilizers
Regeneration
Streamside Management
Utilization
Fire Protection
Soils Disturbance
Clearcut Size/"Green-Up"
Housekeeping
Sensitive Areas
Road Maintenance
Wildlife
Waterbars
T&E Species

Weyerhaeuser has also developed an internal timberlands environmental audit procedures policy and program which are provided to all operations. Specific to North Carolina, the purpose of these audit procedures and program are to:

- Promote a high degree of personal responsibility for stewardship among all North Carolina timberlands employees
- Place responsibility for environmental performance as close to the actual operations as possible
- Document and identify areas requiring improvement in environmental performance
- Ensure progress toward zero defects and continuous improvement in environmental performance
- Promote communication, planning and response to unacceptable results throughout the organization.

General procedures:

- Crew Leader, or Contract Supervisor, will fill out and sign the appropriate Environmental Field Audit Form at the completion of every activity or when moving off of an uncompleted block
- All audit forms will be submitted to the Area Forester with the attached map at the end of every month
- The audit will be entered into the district's computerized spreadsheet
- An exception report of audits which did not pass with zero defects will be created and a copy sent to the Environmental Forester on a monthly basis
- An action plan will be developed for all exception audits and, where feasible, those exceptions will be corrected with 30 days
- As exceptions are corrected, they will be removed from the exception file
- The Environmental Forester, Area Forester, Silvicultural Forester, or Contract Logging Supervisor will conduct a follow-up audit on a small random sample of completed audits to enhance credibility and understanding of Region Standards on a monthly basis
- The audit system will be formally reviewed on an annual basis by the Corporate and Division Audit Team.

Responsibility:

- The Area Forester is responsible for environmental compliance for all activities occurring on fee lands within his district.
- The Raw Materials Manager is ultimately responsible for environmental performance on all stumpage tracts and shares responsibility with the Area Forester for harvesting operations occurring on fee land.
- Every employee is responsible for his or her actions and the actions of contractors under his/her control as these actions impact the environment.

The standards by which all actions are judged on a pass/fail (zero defect) basis are the North Carolina Region Environmental Standards.

Weyerhaeuser Timberlands management and harvesting practices are based upon the Forestry Best Management Practices (BMP) as promulgated by the North Carolina Division of Forest Resources, Department of Environment, Health and Natural Resources. This is the basis for all regulations and practices in the state of North Carolina. Industry does participate in the development of the BMP and updates are made on an as-needed basis. A supplement to this BMP is the Best Management Practices for Forested Wetlands in North Carolina.

BMPs are practices chosen to minimize erosion and prevent or control water pollution resulting from forestry operations. The practices outlined are based on current knowledge and the best judgment of forestry practice experts. BMPs are updated as new methods, techniques and experience are gained from the application of these practices. These practices are designed to assist individuals in meeting the performance standards in Forest Practices Guidelines to Water Quality (15A NCAC 1I .0101 - .0209)

BMPs cover the following activities:

- Runoff and Erosion Control
- Accessing and Harvesting Forest Products
- Site Preparation and Reforestation
- Revegetating Disturbed Areas
- Wildlife Protection

BMPs for Forested Wetlands prescribes procedures for the following:

- Forested Wetlands
  - Road Construction and Maintenance
  - Harvesting and Logging Systems
  - Regeneration/Reforestation
  - Recommended Practices by Wetland Type
  - Streamside Management Zones
  - Water Management
- Wetland Forestry and Wildlife Management
  - Recommended Practices by Wetland Site

Weyerhaeuser has developed a set of Timberland Environmental Management Standards which are based on the BMPs. The Weyerhaeuser standards are more stringent and address more areas. The table of contents provides an excellent overview of these standards which are followed by Weyerhaeuser for managing its North Carolina forests:

- Harvesting
  - Configuration/Setting Design
  - Utilization
  - Performance
- Water Management
- Smoke Management
  - Pre-Burn Considerations
  - Post-Burn Considerations
- Sensitive Area Management
  - Sensitive Areas - Normal Operations
  - Sensitive Areas - Region Approval Required
- Road Management
  - Spacing and Density
  - Construction
  - Maintenance
- Streamside management Zones
- Site Preparation and Regeneration
- Plantation Management
  - Pre-Commercial Thinning
  - Commercial Thinning
  - Fertilization
  - Prescribed Burning
  - Chemical Vegetative Completion/Insect Control
- Wildlife
- Forest Protection
  - Fire Protection
  - Insect, Disease, and Animal
  - Trespass
  - Housekeeping
- Land Use
- Environmental Performance Standards
  - Long-Term Lease Lands (LTL)
  - Private Non-Fee Lands

Furthermore, in addition to these strong programs, Weyerhaeuser endorses and supports implementation of the American Forest & Paper Association (AF&PA) Sustainable Forestry Principles including the Implementation Guidelines. As stated below, twelve objectives are incorporated into these implementation guidelines:

- Broaden the practice of sustainable forestry by employing an array of scientifically, environmentally and economically sound practices in the growth, harvest and use of forests.
- Promptly reforest harvested areas to ensure long-term forest productivity and conservation of forest resources.
- Protect the water quality in streams, lakes and other waterbodies by establishing riparian protection measures based on soil type, terrain, vegetation and other applicable factors and by using EPA-approved Best Management Practices in all forest management operations.
- Enhance the quality of wildlife habitat by developing and implementing measures that promote habitat diversity and the conservation of plant and animal populations found in forest communities.
- Minimize visual impact by designing harvests to blend into the terrain, by restricting clearcut size and/or by using harvest methods, age, classes and judicious placement of harvest units to promote diversity in forest cover.
- Manage company lands of ecological, geological or historical significance in a manner that accounts for their special qualities.
- Contribute to biodiversity by enhancing landscape diversity and providing an array of habitats.
- Continue to improve forest utilization to help ensure the most efficient use of forest resources.
- Continue the prudent use of forest chemicals to improve forest health and growth while protecting employees, neighbors, the public and sensitive areas, including streamcourses and adjacent lands.
- Broaden the practice of sustainable forestry by further involving nonindustrial landowners, loggers, consulting foresters and company employees who are active in wood procurement and landowner assistance programs.
- Publicly report AF&PA members' progress in fulfilling their commitment to sustainable forestry.
- Provide opportunities for the public and the forestry community to participate in the AF&PA memberships' commitment to sustainable forestry.

Established harvest guidelines are periodically updated to ensure that harvesting methods and woods operations are balanced in a manner that provides the most complete utilization of timber under the existing marketing conditions. Considerations essential in the planning of harvest/regeneration management units include maximizing harvest and market economics, providing for protection of soil productivity and water quality, habitat diversity, and a good age class distribution throughout the ownership. Monitoring of ongoing harvest activities provides a measure of assurance that the level of performance enhances the long-term interest in the timberland asset in terms of regeneration needs, erosion control, and soil productivity.

5.2 Environmental Stewardship - General

Only about 3 percent of the Weyerhaeuser forests are harvested in any year. Site-specific harvest planning begins several years in advance to allow detailed study and maximum flexibility. A variety of factors influence what, when and how the harvest is conducted to ensure safety, efficiency and minimal impact to the environment:

- Tree species
- Weather conditions
- Topography and soil stability
- Soil characteristics

- Wildlife habitats and activity
- Watercourse and wetlands conditions

Weyerhaeuser owns or leases approximately 535,000 acres of timberlands in eastern North Carolina with much of these lands surrounding the New Bern manufacturing complex. Several decade-old studies continue in order to understand the soil characteristics and growth rates of forests on our lands. .Ongoing soil and tree growth assessments at selected plots are conducted throughout these holdings. These studies serve to permit recognition and documentation of any significant effects of point and nonpoint emissions sources. Long-term fisheries and wildlife studies document biological populations and trends and again serve to identify any significant impacts from our operations.

Managing a forest for wood production supports other values. Managed forests on Weyerhaeuser lands near New Bern, NC, reduce the pressure on other forestlands and provide economic incentives to grow trees instead of converting the land to other uses. Weyerhaeuser manages its forestlands for the production of wood, practicing sustainable forestry to meet the increasing worldwide demand for wood products. The Company uses scientific research and technology to accomplish this while managing other important environmental values - such as soil productivity, water quality, fish and wildlife habitat, and plant and animal species diversity.

Weyerhaeuser has contributed over $4 million to organizations such as the Nature Conservancy, the World Wildlife Fund and the Audubon Society, as well as donating or exchanging hundreds of thousands of acres of culturally, biologically or historically unique areas. At the University level research support has been provided to Wayne Skaggs, NCSU, and Bill Kirby-Smith, and Duke among others.

Weyerhaeuser is committed to managing its forestlands for the long-term. For example, in the 1950s soil scientists surveyed and classified all of Weyerhaeuser's lands into nearly 400 different soil types. Coupled with on-going research, this information helps foresters determine which species grows best where. The Company wants to ensure that its forests—including all of the animals, birds, plants and other species that inhabit them—are healthy and vigorous for generations to come. In the 1950s Southern lands were purchased that for decades had been repeatedly logged and burned or used for agricultural purposes. Today nearly all that land supports healthy second- or third-generation forests that are managed on a sustainable basis. After harvesting, trees are planted that are native to the area, primarily loblolly pine which is the dominant natural species in the South. In some areas oak, sweet gum, bald cypress, ash and yellow poplar are also planted.

Even in areas where predominantly one species is planted, the forests are far from being a "monoculture." Shrubs, ferns, grasses and other "wild" species of both hardwood and softwood trees—brought in from surrounding areas by the wind or birds—grow amongst the planted trees. Even though just a few species are hand planted, a great deal of natural regeneration takes place on the Tree Farms. In addition, streamside buffer areas, upland habitat preservation areas and wetland- and wildlife-reserve trees provide biological diversity.

Weyerhaeuser protects diversity within species by maintaining the native gene pools of over 70,000 different parent trees. Hundreds of these trees provide seed, pollen or cuttings for the nursery seedlings, potentially providing newly planted areas more genetic diversity than those that regenerate without assistance.

Weyerhaeuser foresters are working continuously to improve the forest health and productivity. By selection of seedlings with improved natural defenses against insects or disease, chemical use can be minimized. Judicious thinning and fertilization helps ensure adequate light, nutrients and moisture as well as providing wood chips for pulp and paper products as the forest grows. Continuous improvements in

equipment and operating methods are increasing the forest management efficiency while minimizing damage to soil, remaining trees and other vegetation.

Weyerhaeuser Company supports a mosaic of timberland types, from natural bottomland areas (predominately hardwood in nature) through the various successional stages of the intensively managed, even-age pine plantation. Plantations in the younger age classes, 1 to 8 growing seasons, provide excellent forage and browse habitat for many game and non-game wildlife species. The older class plantations under intensive management provide a diversity of both forage and cover habitat. Non-stocked, non-merchantable timberland ownership is mostly marsh and swampland within which thrive a variety of aquatic and animal life. The Company takes responsible actions to protect threatened or endangered species and their habitats on Company landholdings. In all cases, compliance with applicable state and federal regulations will be the minimal accepted standard of performance. Federally endangered species in North Carolina are the red-cockaded woodpecker, bald eagle, cougar (Florida panther), and American alligator. In North Carolina, special consideration is also given to the osprey and the black bear, although neither is an endangered species.

Wildlife habitat areas are maintained in their natural condition along streams and in upland areas. Through cooperative research with universities and public agencies, Weyerhaeuser is continually adding to its knowledge of wildlife habitat. The company has and continues to make numerous voluntary changes in forest management practices to accommodate and be sensitive to special wildlife habitat needs.

In North Carolina the survival of wildlife species adapted to mature forests is assisted by managing the habitat corridors. Such corridors may include hardwoods, pines and marsh. For specific site conditions or habitats, planting stock includes oak, gum, bald cypress, ash and yellow poplar.

Trees left standing along riparian zones and as wildlife reserves in harvested areas will be old trees among younger forest providing homes for a diversity of wildlife.

The development of site-specific Best Management practices (BMP) for safely growing and harvesting trees on most wetlands allows for both productive wood production and wetlands protection.

5.3 New Bern Pulp Mill Environmental Monitoring

The impacts of implementing a biomass gasification combined cycle power plant or a combined biomass gasification combined cycle power plant with an ethanol from biomass facility will have no, or at most little, environmental impact on the receiving environments. The aqueous waste biochemical oxygen demand (BOD) load from the ethanol plant will increase by less than ten percent of the current loadings. Particulate air emissions would likely be decreased if this implementation were to replace some existing power boilers.

The National Pollution Discharge Elimination System (NPDES) wastewater and the air emissions permits from the State of North Carolina require daily and monthly environmental reports as defined in the permits. Audits are made by the mill staff to show and to ensure compliance with these permits. Yearly environmental audits are conducted from the Corporate Office of the Environment to ensure Corporate environmental policies are being followed. No changes would be required in these current procedures with the implementation of these facilities.

Point source emissions from the New Bern Pulp Mill complex are monitored daily on aqueous treated effluents being discharged to the receiving environment. Pulp mill discharges are continuously sampled, with 24-hour composites analyzed for BOD_5, total suspended solids (TSS) and acidity (pH). Routine

samples are collected on a periodic basis for color, nutrients, aquatic toxicity, trace organics and organics analyses.

Ambient air quality monitoring is conducted at several sites in the New Bern area by the State of North Carolina and the Craven County Health Department. Particulates and sulfur dioxide are the major parameters of interest. Particulate, sulfur dioxide, nitrogen oxides and opacity measurements are made for many of the combustion and process sources at the New Bern pulp mill. Continuous monitoring is done of NOx on the recovery boilers, power and package boilers, smelt dissolving tanks and TRS on the smelt dissolving tanks and lime kiln. Opacity monitoring is also conducted.

Receiving water studies have been ongoing on the Swift Creek, the Neuse River and its estuary. Routine water quality monitoring is made upstream and downstream of the mill discharge in which the parameters of dissolved oxygen, BOD5, color, nutrients, transparency, trace organics and inorganics are measured. Sediment and fisheries studies are conducted periodically to identify and assess impacts of the pulp mill discharges. National Council for Air and Stream Improvement (NCASI), an industry-sponsored research group, has been conducting studies over the past seventeen years using a series of experimental streams to assess pulp mill effluent discharges on fishery production, the health, survival and reproductive success.

Forestry operations by man can impose an adverse effect on water flowing from forests. These effects are generally classified as sediment, temperature, chemical use, and organic matter. Utilization, environmental performance, road and ditch maintenance, soil management and housekeeping constitute the major areas of measurable performance following the harvest operation.

All harvesting operations conducted by or contracted by Weyerhaeuser Company on fee and non-fee lands shall comply with Chapter 113A, Article 4 of the General Statues of North Carolina entitled, "The Sedimentation Pollution Control Act of 1973." Operations on long-term lease lands will adhere to the North Carolina Region Timberland Environmental Management Standards. Compliance with current federal and state regulations is mandatory. Activities on private non-fee lands will be guided by the goals of the landowner, along with current federal and state regulations and the state best management practices (BMPs).

Surface water management is recognized as a prerequisite to intensive forest management. Forestland ditching has been the silvicultural tool utilized to remove ephemeral surface water and maintain the near-surface water at a desired level. Water management systems on major tracts are planned and implemented so as to minimize impacts relative to turbidity, sedimentation, downstream landholdings and salinity in downstream areas. Fire protection, growth enhancement and wildlife habitat supplementation are additional benefits derived from a well designed and implemented system.

Forest management activities are planned to minimize potential adverse impacts on water quality, bank integrity, adjacent soils and the related elements of wildlife habitat (both terrestrial and aquatic) within the waterside management zone.

Site preparation and regeneration receives much attention. Site preparation requirements are assessed on a site-by-site basis considering vegetative and soil type characteristics, matching available equipment with existing features of the terrain and soils and scheduling operations under favorable weather conditions. Appropriate procedures and technology are continuously evaluated and updated, as necessary, to ensure that a cost effective, environmentally sound program is maintained.

Plantation management is conducted in a manner sensitive to environmental protection and considerate of the economics of a particular plantation. Well-planned treatments, such as pre-commercial and

commercial thinning, fertilization, following thinning, prescribed burning and chemical applications for insect and weed control can result in high quality wildlife habitat throughout most of the life of the plantation.

Section 6

Market Issues

6.1 BGCC/Power Market

Background

There are a number of general market issues which must be considered when introducing new technology and products into the commercial market place. While developers are quick to define advantages and benefits of new technologies, potential users are faced with a broad range of risk considerations which in effect become barriers to commercialization. The following are the issues of particular concern to Weyerhaeuser and its team members regarding the decision to employ BGCC technology at the New Bern mill.

- Efficiency and cost of existing energy generation technologies are well defined. The rate at which current operations and technologies may become noncompetitive is not precisely known, but energy systems typically follow relatively long 25 to 30 year life cycles. A decision to pursue a relatively unknown technology over an established one for such a long investment cycle requires strong and compelling evidence, convincing cost projections, and as pointed out in Section 1.1, a timing that fits the industry's normal capital cycle.

- Availability, reliability, and operability of new technology systems may not achieve the required levels for some period of time, thereby denying the user of potential benefits.

- Technology development is a continual process and significant improvements can be identified early in the application cycle. First-of-kind plant users may not achieve the same benefit as follow-on customers who accept much lower levels of risk.

- Incorporation of new technology into existing plants frequently involves design restrictions which may not allow the new system to demonstrate optimum technical and economic performance.

- Plant operational integrity and ability to provide product flexibility is an increasingly important requirement of business decisions. The new technology must demonstrate an improved ability to achieve such flexibility and reliability.

- Competition for capital resources is a continuous process in business. There are significant demands for other plant modernization, capacity additions, and requirements imposed by new regulations or market opportunity. New power system technology must not only demonstrate an ability to improve plant operations but also show significant profitability in order to compete with other possible investments.

- Environmental considerations have become global in character and selection of new plant designs or modifications is strongly influenced by local and other environmental regulations.

In general, there is a significant barrier to the commercial deployment of new, more efficient power generation systems due to competitive pressure and difficulties related to technical and economic risks. There is also considerable concern regarding the economics of current power systems. A combination of factors including successful conservation efforts on the part of consumers, legislative action to bring

about a competitive power generation industry, environmental regulatory requirements, and a leveling of real growth in electric demand serve to create this barrier.

Although it is broadly believed that significant increase in dependence on gas may have long-term negative implications on power system reliability and electricity costs, present economic pressures often result in decisions to use gas turbines or combined cycles fueled with gas. Concerns of fuel costs and reliability, despite well known problems in the past, are addressed by expectations that low cost fuel will be available or new technical alternatives will materialize as a result of competitive opportunities when needed. Industries such as the forest product and utility industries which have such an enormous capitalization base simply cannot afford to rely on optimistic projections of low cost high quality fuels upon which to plan future operations. Critical pulp and paper mill operational requirements, such as adjusting power and steam needs in an effective manner, can be better achieved with BGCC technology as pointed out in Background Section 1.1 of this report and if done at the proper scale could also be integrated as a cost effective element of a utility system.

If there was a general need for base loaded power generation capacity, a technology like biomass gasification could more readily be introduced because of its ability to use low cost or residual fuels, ability to be integrated with existing gas turbine systems, and its high efficiency. At the appropriate scale it could be competitive with other technologies such as coal-based power plants, oil- or gas-fueled systems and other new technologies because of the low cost fuel. In addition, biomass gasification has the advantage of being based on a renewable fuel, indigenous to this country, having the potential to significantly reduce oil imports. When all factors are considered, it is believed that this technology is vital to the forest product industry's long-term economic vitality and should be introduced into commercial service employing a shared risk program such as is planned by the Department of Energy with all stakeholders participating.

Biomass gasification offers the opportunity of developing a forest-based chemical industry which may be complementary to existing operations and provide for new revenue streams. The technology also offers the opportunity to replace existing black liquor recovery technology with safer, more efficient and more environmentally compatible pulp mill operations in the future. Collectively, these potential benefits argue strongly in support of biomass gasification technology and for its commercial development.

Other benefits of an increased biomass-to-energy capacity include a decrease in net carbon dioxide release and lower sulfur dioxide emissions. Given that a healthy forest product industry is of significant benefit to North Carolina, it is reasonable to address the various means which could be utilized to distribute the risks associated with the introduction of BGCC technology at New Bern. These risks include:

- For the New Bern project, technical risks of necessity must be borne by equipment suppliers, project developers, constructors, and Weyerhaeuser. Technology developers have already invested significant funds to assure prospective users that reliable and operable systems can be designed and built. The largest risk in this area will be borne by Weyerhaeuser since BGCC system performance impact on plant capacity and, therefore, economic return is unknown until the technology is operationally demonstrated.

- Technology risks are and must be borne by the developers and those who own the rights to use the technology. In the case of BGCC technology, several vendors have progressed to the point of commitment to provide commercial guarantees that provide for capital risk sharing. However, there is little to protect the user from the extra cost of backup systems to avoid operating losses during the startup and commissioning phase.

- Capital costs associated with first-of-a-kind installations are generally higher than the cost for later applications. In the case of energy processing facilities, it is usual for first-of-a-kind plants to be considerably more expensive because of the high cost of redundant systems to mitigate technical risk. The DOE program to encourage power production from biomass to support rural economic development and similar programs that may be under consideration recognizes this problem and, in part, provide the mechanism to manage this risk.

- Market risks must also be factored into the decision to use new technology. In the New Bern BGCC plant case, it was determined that additional product and revenue streams could be important in the future for maintaining an economically viable operation. While a biomass gasifier has the potential to solve a number of mill operating problems, no revenue streams result for a mill if the plant is designed to meet only the mill steam, power, and waste disposal requirements. A larger scale facility would allow for the production of additional products from biogas produced by the gasifier. The most compatible of these products, when low Btu air blown gasification is utilized, is electric power. Although there is a projected need for power in the New Bern area, there may be a mismatch between the mill operating regimen and the electric energy demand profiles for a period of time. While plant design can be adjusted to provide for a certain level of dispatchability, capital costs would increase- thereby increasing the financial risk. A risk plan is, therefore, needed in order to distribute additional costs which may accrue if this plant becomes available sooner than is required in the region.

- Environmental benefits that would be realized with use of BGCC technology and increased use of biomass resource are expected to be significant in both a global and a local sense. Atmospheric, land use, and other environmental benefits are projected as a result of utilization of biomass based energy production. Long-term impacts, however, cannot be predicted with certainty; therefore, it must be assumed that there will be concerns expressed regarding implementation of this and any new technology which will impact on the decision process, affect timing of implementation and may have an impact on both project design and costs. This, in turn, will have an impact on the value of the technology in general and the project, specifically. Introduction of the technology on a comparatively small scale in a prudent manner with a reasonably shared and funded risk management plan would serve to safeguard such concerns.

North Carolina Market for Electric Power

Background Information

The Carolina Power & Light Company (CP&L) electric power system service area covers approximately 30,000 square miles of eastern and central North Carolina, the Asheville area in western North Carolina, and the northeastern quadrant of South Carolina. Rapid growth of the CP&L service area has created a steady demand for increasing amounts of electric power. CP&L's existing supply-side resources consist of 5,285 MW of coal, 3,064 MW of nuclear, 1,046 MW of oil/gas, and 218 MW of hydroelectric facilities, as well as 1,596 MW of purchases from other utilities and non-utility generators. All generation additions scheduled through 2004 are relatively low capital cost combustion turbines needed for peaking capacity. The plan also calls for the addition of combined cycle capacity in the 2005 through 2007 timeframe, and the first coal unit is added in 2008. CP&L's resource plan also incorporates a cost-effective mix of DSM programs which have favorable environmental effects and result in improved efficiencies of energy utilizations.

Uncertainty in fuel supply, economic growth, industry regulation, increasing competition in the wholesale power market, and environmental legislation, are complex issues which must be addressed by energy

system planners. With the current debate over retail competition in the power market, plans must be developed that recognize and are responsive to the uncertainty of future events. Plans must be flexible and must not depend on a specific outcome of future events for them to be successful. To that end, CP&L emphasizes diversity and flexibility in its Integrated Resource Plan to meet the objective of providing an adequate and reliable power supply to customers at the lowest reasonable cost and with reasonable protection of the environment.

Utility Cost Analysis

A busbar cost analysis was performed to compare the cost of a biomass gasification combined cycle (BGCC) plant to the market cost of electricity for CP&L service area and conventional supply-side resources that would compete with power from a BGCC facility. The key assumptions in this analysis are:

- Start-up operation in 2000;
- Capital and O&M Cost Estimates as outlined in Sections 2.7.1 and 2.7.2; and allocated for the power export portion of the overall plant on the basis of the export energy to total plant energy ratio.
- 20 year operating life;
- 85 percent capacity factor;
- Department of Energy funding for the project is 50 percent of capital costs.

Cost Analysis of BGCC Plant Without Department of Energy Funding

Figure 6-1 examines the annual costs of two BGCC configurations without a contribution to capital costs by the Department of Energy (DOE). The two configurations of the BGCC plant include one that provides 33.4 MW of export power as discussed in Section 2 of this report and a similar facility using a larger gasifier and a more efficient combustion turbine which would supply 85.4 MW of export power. The 20-year lifetime cost is also displayed on the graph in terms of a levelized cost per kilowatt-hour in 1995 dollars.

The results of the analysis show that an unsubsidized BGCC 6B plant that could export 33.4 MW is not cost competitive with the local utility cost of power until the final years of the 2000-2019 time period. Export of 85.4 MW from the larger, more efficient BGCC 6F cogeneration facility does have annual costs that are less than the local utility's costs starting in 2011. However, over the 20-year operating life, this type of facility, with start-up in the year 2000, is not economical compared to the CP&L avoided cost of power.

Two of the competing technologies to supply base or intermediate duty power are a 500 MW coal gasification combined cycle plant and a 225 MW combined cycle power plant burning oil or natural gas, respectively. CP&L resource planning had indicated that an intermediate load duty oil or natural gas fired combined cycle power plant would be required in the 2004 time frame. Intermediate load duty translates to a 50 percent capacity factor at best for this future unit. For a BGCC facility to be selected by the electric utility as the supply technology for capacity expansion, its cost to produce power must be less than these alternative technologies. As Figure 6-1 shows, without DOE funding, neither the 33.4 MW (6B) nor the 85.4 MW (6F) BGCC power export facilities can produce electricity less expensively than a coal gasification combined cycle unit, assuming a start-up in the year 2000. However, both versions of the BGCC plant can produce power less expensively than an oil-fired combined cycle unit at some point during the study horizon. The 33.4 MW BGCC facility produces power less expensively than an oil-fired combined cycle unit running at a 50 percent capacity factor beginning in 2004 and less than a natural gas-fired combined cycle unit by the year 2011. Over the 20 year operating life, the cost of the 33.4 MW of export power from the BGCC cogeneration plant without DOE funding

is less expensive than that from an oil-fired combined cycle unit, but more expensive than power from a natural gas-fired combined cycle unit.

Figure 6-1 shows that without DOE funding the larger 85.4 MW of export power BGCC cogeneration plant produces electricity more cost-effectively over its 20-year life than a combined cycle plant operating at a 50 percent capacity factor fueled with either oil or natural gas.

Cost Analysis with Department of Energy Funding

A second analysis was performed in which DOE provides 50 percent funding of the capital costs of a BGCC facility. The results of this evaluation are shown in Figure 6-2. The BGCC 6B cogeneration plant with 33.4 MW of export power starting operation in 2000 is still not economical compared to the CP&L avoided cost of electricity over the 20-year operating life. It can, however, produce electricity more economically than a 225 MW combined cycle unit burning oil or natural gas.

Figure 6-2 shows that the larger version of the BGCC cogeneration facility based on a General Electric 6F turbine, while more costly during the first five years, can produce electricity at a cost that is less than the CP&L avoided cost over the 20 year operating life. The cost of electricity for this plant is less than a 225 MW combined cycle fueled with either natural gas or oil and also 500 MW coal gasification combined cycle plant. The BGCC cogeneration plant that is based on a General Electric 6B turbine does not produce electricity that can be sold to the grid economically over its 20-year life. Such a configuration also generates more expensive electricity that a 500 MW coal gasification combined cycle plant.

Sensitivity Analysis on Startup Date

One conclusion from the analysis discussed above is that, with the exception of a larger, more efficient BGCC cogeneration facility based on a GE 6F turbine with DOE funding, a BGCC plant operational in 2000 cannot provide economical electricity to the local utility over its 20-year operating life with or without DOE funding. Therefore, such a facility should not be developed prior to 2000. However, to determine whether such a facility would be economical if installed in a later year, an analysis was performed in which the start-up year was varied. The analysis examined the 33.4 MW and 85.4 MW export power BGCC cogeneration facilities previously described.

The analysis was performed comparing the 20-year levelized cost of electricity of the BGCC plant to the market price of electricity using start-up years as late as 2020 for facilities both with and without DOE co-funding. The analysis found that a 33.4 MW export power BGCC cogeneration plant is not economical if operation begins prior to 2020 either with or without DOE funding. Therefore, it is unlikely that such a facility would ever be able to produce economical electricity for export to the local utility. As discussed above, the BGCC cogeneration facility based on the GE 6F turbine with DOE co-funding is economical over a 20-year life with operation starting in 2000. Without DOE funding, such a facility is not economical if operational prior to 2020.

This assessment confirms that a small scale solid fuel plant has difficulty in competing with large scale existing utility plants when a power sales contract is essential, even though the plant has an efficiency better than the overall utility system through its integration with a viable manufacturing operation.

Given the substantial sensitivity of the BGCC plant to both capital and fuel costs, both will need to move in a positive direction before wide spread use of this technology occurs within the forest products industry. Although it is difficult to predict what may happen to the capital cost as the technology matures, it is believed that a 10-30 percent reduction is possible for the plant. It is somewhat easier to speculate on what the potential may be for decreasing fuel costs. Although it is unlikely that the cost of

residual biomass from wood products manufacturing and harvesting operations will decrease over the next 10-20 years, it is equally likely that the advances in harvesting technology and forest plantation management practices will offset any upward pressures on price and that the fuel cost projections contained in this report will be consistent over time.

The real opportunity will occur in 8-10 years and beyond when black liquor gasification combined cycle becomes a reality. In this case, not only will the size of the gas turbine plants potentially double (thus, taking advantage of economy of scale), the availability of half or more of the biogas from black liquor processing will have a significant dilution factor on the real cost of fuel going to these combined facilities. Although this impact needs to be studied further, it is believed that when it is taken into account the average fuel cost will be significantly less than $1.00/MBtu and could be as low as 70-80¢/MBtu.

As the industry moves in this direction, there is considerable flexibility, particularly with larger mills, to utilize internally much or all of the power generated. Other possibilities will be to retail wheel the power to other facilities owned by the same company; and, of course, in regions where an attractive power contract can be obtained, these facilities can be optimized for maximum use of the low cost black liquor and biomass fuel. When these facilities are optimized in this way, there will be some locations where as much as 200-250 MW of power can be realistically produced. Weyerhaeuser's North Carolina region surrounding New Bern and Plymouth represents such an opportunity.

No DOE Contribution

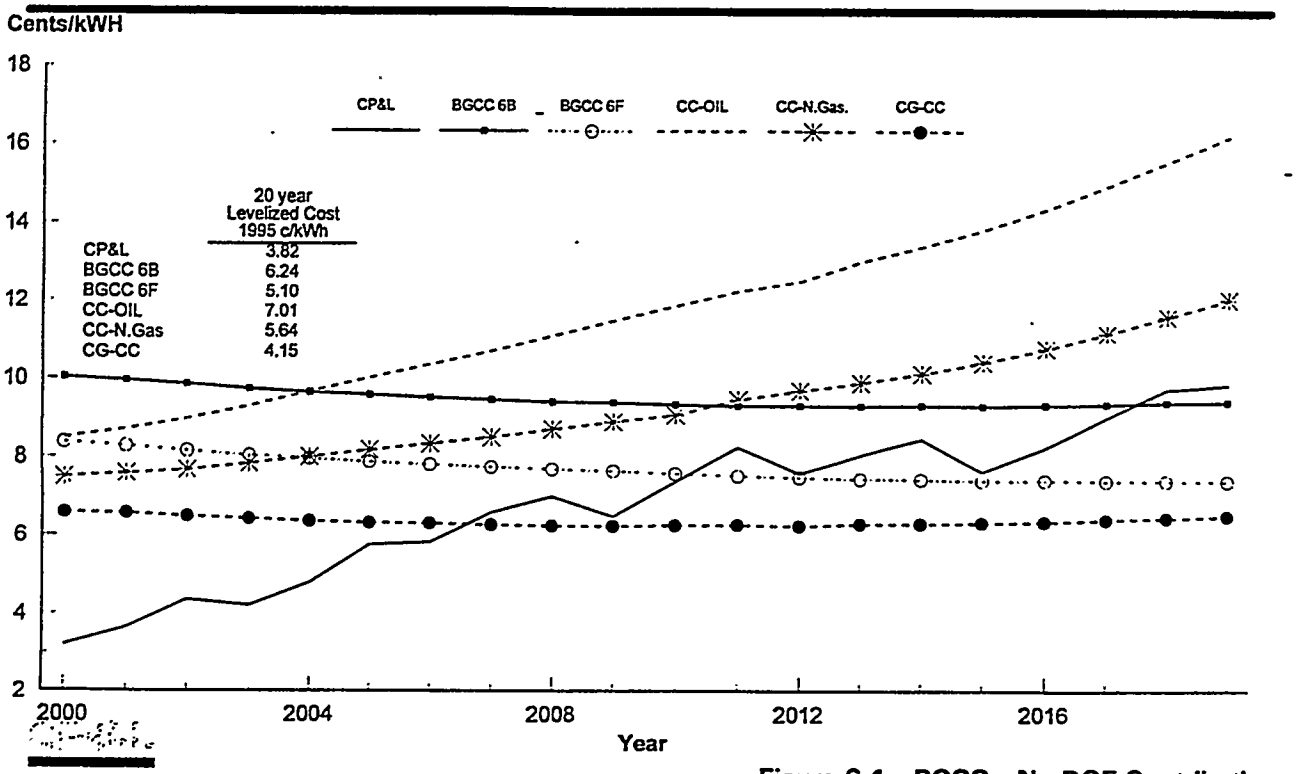

Figure 6-1: BGCC - No DOE Contribution

With DOE Contribution

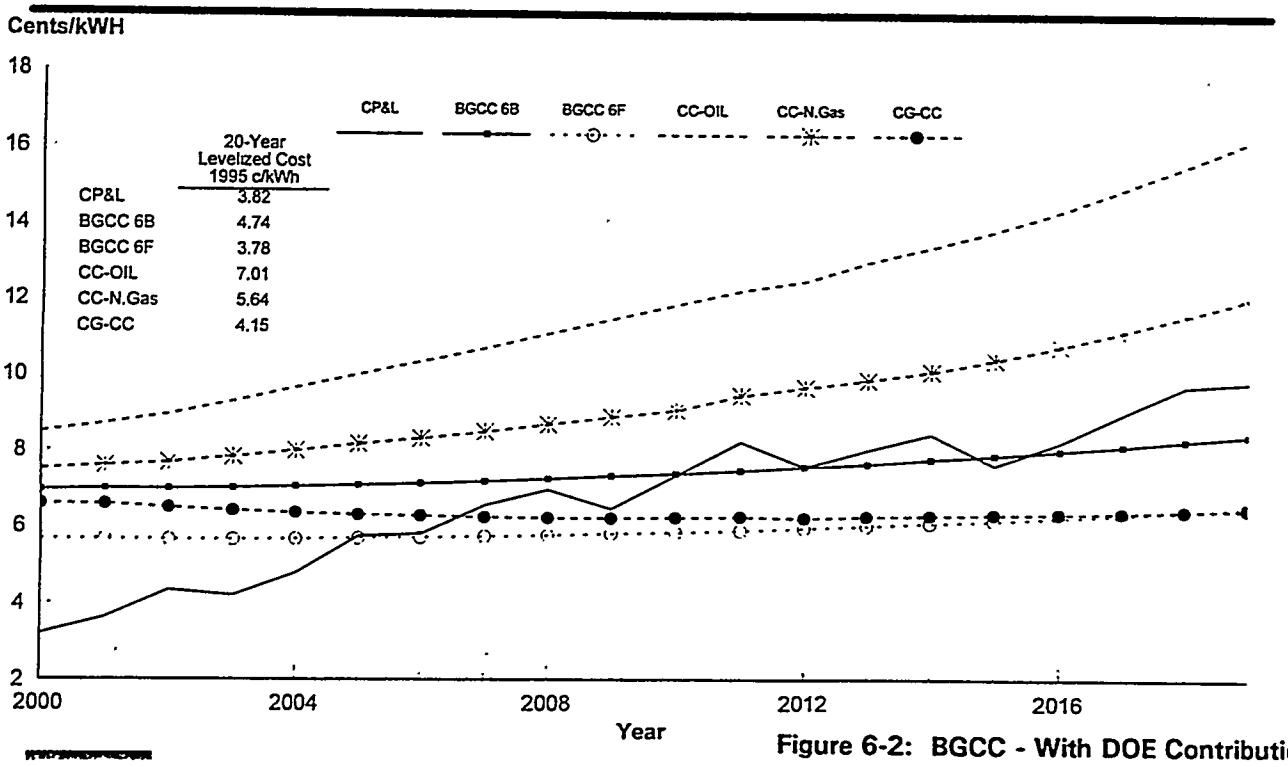

Figure 6-2: BGCC - With DOE Contribution

6.2 Fuel/Ethanol Market

Background

United States East Coast (PAD-I) motor gasoline demand is 41 billion gallons based on 1993 market data. Of this amount, 1.4 billion gallons, or 3.4 percent, is sold as gasoline/ethanol blends. Assuming these blends are 10 percent ethanol, East Coast ethanol demand is 140 million gallons, annually, or 10 percent of the total U.S. fuel ethanol supply. As explained in a later section, a subset of this market was selected for the New Bern study. This subset, or model market, has an estimated ethanol demand of 120,000,000 gal/yr. The envisioned New Bern Biomass to Ethanol facility can produce 27,000,000 gal/yr, or 22 percent of the model market demand figure.

The minimum permissible ethanol blending percentages for oxygenated fuels and reformulated gasoline (RFG) are actually lower than 10 percent. Based on the available federal excise tax credit for ethanol-gasoline blends, and the value of the ethanol, including its octane and its Reid vapor pressure, the optimum concentration of ethanol might be in the range of 7.5 percent. However, blends of ethanol and gasoline containing less than 10 percent ethanol do not quality for the federal ethanol blending credit, which is an alternative subsidy for using ethanol. The excise tax credit has no value to large company blenders who already have such large deductions that they must pay the Alternative Minimum Income Tax. By blending at 10 percent, these companies qualify for the ethanol blending credit.

Presently, there are no ethanol fuel manufacturing facilities in the East Coast region. The three nearest ethanol manufacturing facilities are between 500 and 1,000 miles away. That the region receives distant supply today indicates there is significant infrastructure in place to transport fuel ethanol to terminals in the selected model marketing area. Ethanol produced at a New Bern facility can utilize this same product transportation infrastructure.

About 65 percent of the New Bern ethanol product is expected to enjoy a transportation cost advantage within its model ethanol market over ethanol shipped from the three nearest ethanol production locations in Tennessee, Ohio, and Indiana. This transportation cost advantage encompasses a marketing area from New Bern north through the Baltimore region.

Ethanol produced at a New Bern facility will need to be priced competitively with other fuel oxygenates including ethanol supplied from outside the model marketing area. A review of fuel ethanol price history from 1992 to the present shows prices for selected markets ranging from $0.94 to $1.45 per gallon and averaging $1.17 per gallon. The low end of the price range likely is indicative of the cash costs for conventional ethanol plants. Likewise, the high end of the price range likely is indicative of the "switching" price, or the price at which consumers switch to oxygenate alternatives.

Ethanol produced at a New Bern facility will be eligible for the federal ethanol blending credit of $0.54 per gallon under today's legislation. In addition, the state of North Carolina allows a tax credit up to 30 percent of a plant's construction cost. The economic justification of a New Bern ethanol facility will depend on many factors, including ethanol market prices and tax credits.

United States Ethanol Manufacturing Capacity

To provide perspective, this section compares the capacity of the envisioned New Bern ethanol plant with that of conventional ethanol facilities.

U.S. Fuel Ethanol Plants and Capacity

U.S. fuel ethanol annual manufacturing capacity is about 1.4 billion gallons [1]. As of 1993 there were 37 facilities, most of which produce ethanol from corn and are located in the Midwest. A much smaller number of facilities are located in the West. U.S. fuel ethanol manufacturing facilities in place as of 1993 are listed in Table 6-1.

Comparison of New Bern and Conventional Ethanol Plants

If implemented as described in this study, the New Bern biomass to ethanol facility, with an annual capacity of 27,000,000 gallons, would rank 13th and would increase today's fuel ethanol capacity by 2 percent. A review of fuel ethanol plant statistics shown in Table 6-2 and Table 6-3, shows that the capacity of New Bern facility is about three-quarters the size of the average sized facility in the U.S.

Table 6-2: Selected Capacity Statistics for U.S. Fuel Ethanol Plants

	All Plants	Plants < 10 MM Gal	Plants > 10 MM Gal
Number	37	18	19
Total Capacity	1,393,300,000	51,900,000	1,341,400,000
Average Capacity, Gallons/Yr.	37,700,000	2,900,000	70,600,000
Median Capacity	10,000,000	2,300,000	30,000,000
Total Capacity, Percent of All Plants	--	4%	96%

Table 6-3: Comparison of New Bern Ethanol Plant Capacity Statistics

New Bern Fuel Ethanol Plant Capacity Vs All Ethanol Plants			
	All Plants	Plants < 10 MM Gal	Plants > 10 MM Gal
New Bern Capacity Vs Total Capacity	2%	54%	2%
New Bern Capacity Vs Average	74%	971%	40%
New Bern Capacity Vs Median	280%	1217%	93%

New Bern Ethanol Plant Marketing Model

A New Bern Ethanol Plant Marketing Model was developed considering several factors including federal clean fuels requirements, present ethanol demand, estimated future demand, and transportation costs. The following describes how each of these areas was considered when building the ethanol marketing model.

The New Bern Ethanol Plant Model Marketing Area

New federal clean fuel requirements are intended to reduce, or limit, motor fuel combustion emissions of ozone and of carbon monoxide (CO) in "ozone non-attainment" and "CO non-attainment" areas of the United States. Federal regulations require fuel marketers to provide oxygenated, and/or, reformulated fuels in these regions [3]. Materials which can be added to gasoline formulations to meet the federal regulations include ethanol, MTBE, ETBE, and TAME, to name a few.

Table 6-1: U.S. Fuel Ethanol Plants and Capacity [1]

Company	City	State	Gal/Yr.	Rank
Archer Daniels Midland	Decatur	Illinois	330,000,000	1
Archer Daniels Midland	Peoria	Illinois	200,000,000	2
Archer Daniels Midland	Cedar Rapids	Iowa	170,000,000	3
Archer Daniels Midland	Clinton	Iowa	140,000,000	4
Pekin Energy Company	Pekin	Illinois	100,000,000	5
New Energy Company of Indiana	South Bend	Indiana	75,000,000	6
South Point Ethanol	South Point	Ohio	65,000,000	7
A.E. Staley Manufacturing Co.	Loudon	Tennessee	40,000,000	8
Minnesota Corn Processors	Marshall	Minnesota	32,000,000	9
Cargill, Inc.	Eddyville	Iowa	30,000,000	10
Minnesota Corn Processors	Columbus	Nebraska	30,000,000	11
Chief Ethanol Fuels, Inc.	Hastings	Nebraska	28,500,000	12
High Plains Corporation	Colwich	Kansas	20,900,000	13
The Hubinger Company	Keokuk	Iowa	18,000,000	14
Archer Daniels Midland	Walhalla	North Dakota	16,000,000	15
Alchem Limited	Grafton	North Dakota	12,000,000	16
Giant Refining, Inc.	Portales	New Mexico	12,000,000	17
Midwest Grain Products, Inc.	Pekin	Illinois	12,000,000	18
Grain Processing Corporation	Muscatine	Iowa	10,000,000	19
Reeve Agri Energy, Inc.	Garden City	Kansas	7,500,000	20
Manildra Energy, Inc.	Hamburg	Iowa	6,000,000	21
Midwest Grain Products, Inc.	Atchison	Kansas	6,000,000	22
Heartland Grain Fuels	Aberdeen	South Dakota	5,000,000	23
Morris Ag-Energy Co., Inc.	Morris	Minnesota	4,500,000	24
J.R. Simplot Co.	Caldwell	Idaho	4,000,000	25
Georgia Pacific Corp.	Bellingham	Washington	3,500,000	26
J.R. Simplot Co.	Burly	Idaho	3,000,000	27
Golden Cheese of California	Corona	California	2,600,000	28
Alcotech, Inc.	Ringling	Montana	2,000,000	29
Parallel Products	Cucamonga	California	2,000,000	30
Kraft, Inc.	Melrose	Minnesota	1,200,000	31
Minnesota Clean Fuels	Dundas	Minnesota	1,200,000	32
Broin Enterprises, Inc.	Scotland	South Dakota	1,000,000	33
Dairymen's Cooperative	Tulare	California	700,000	34
Pabst Brewing Company	Olympia	Washington	700,000	35
ESE Alcohol, Inc.	Leoti	Kansas	500,000	36
Vienna Correctional Center	Vienna	Illinois	500,000	37
Total Ethanol Capacity			1,393,300,000	

Table 6-4 below, lists the PAD-I states, including the District of Columbia, and their "ozone non-attainment" and/or "CO non-attainment" designation. Also tabulated is which of the PAD-I states have regions requiring oxygenated, RFG (reformulated gasoline), and/or combination oxygenated/RFG fuels. The New Bern ethanol plant model marketing area includes only those states which have regions requiring oxygenated, RFG, and/or combination oxygenated/RFG fuels.

Oxygenated fuels are required to contain, on average, about 2.1 weight percent oxygen, while RFG fuels are required to contain, on average, about 2.7 weight percent oxygen [3]. The ethanol volume which can be blended into the finished gasoline/ethanol fuel product to meet the oxygen weight specification depends on several factors. By way of example, to attain a 2.1 weight percent oxygen specification, gasoline/ethanol blends may contain 5 to 7 volume percent ethanol. Likewise, to attain the 2.7 weight percent specification, blends may contain about 10 volume percent ethanol. Ethanol can be blended year-round in RFG and oxygenated gasolines. In CO non-attainment areas, oxygenated gasoline blends must be marketed during a designated (nominally winter) season.

Table 6-4: New Bern Ethanol Plant Model Market Area

	Ozone	CO	States Having Area Fuel Requirements for			New Bern Model
State	Nonattainment	Nonattainment	Oxygenated	RFG	Oxygenated/RFG	Market Area
North Carolina	Opt-In	Yes	Yes			Yes
Virginia	Yes	Yes		Yes		Yes
Dist. of Columbia	Yes	Yes			Yes	Yes
Maryland	Yes	Yes		Yes	Yes	Yes
Delaware	Yes			Yes		Yes
Pennsylvania	Yes	Yes		Yes	Yes	Yes
New Jersey	Yes	Yes		Yes	Yes	Yes
Connecticut	Yes	Yes		Yes	Yes	Yes
New York	Yes	Yes	Yes	Yes	Yes	Yes
Massachusetts	Yes			Yes	Yes	Yes
Rhode Island	Yes			Yes		Yes
New Hampshire	Yes			Yes		Yes
Maine	Yes			Yes		Yes
Vermont	Yes			Yes		Yes
West Virginia	Opt-In	Yes	No	No	No	No
Florida	Opt-In		No	No	No	No
Georgia	Opt-In		No	No	No	No
South Carolina	Opt-In		No	No	No	No

Model Market Area Fuel Demand

Gasoline and gasoline/ethanol blend demand for the states in the New Bern Ethanol Plant marketing model are listed in Table 6-5, below. The listed data is for the year 1993, and it is taken from reference [1]. Included in the table is an estimate of the present ethanol demand, assuming the gasoline/ethanol blends are 10 volume percent ethanol.

Table 6-5: Ethanol Plant Model Market Area Fuel Demand

State	Gasoline 000 gallons	Gasoline/Ethanol Blends 000 gallons	Estimated Present Ethanol 000 gallons	Sensitivity: Ethanol w/RFG 000 gallons
North Carolina	3,371,311	25,689	2,569	117,996
Virginia	3,093,817	155,691	15,569	108,284
Washington, DC	176,379	10,000	1,000	6,173
Maryland	2,126,585	22,675	2,268	74,430
Delaware	353,051	25,119	2,512	12,357
Pennsylvania	4,701,894	400,100	40,010	164,566
New Jersey	3,369,892	0	0	117,946
Connecticut	1,411,172	52,695	5,270	49,391
New York	5,653,256	461,198	46,120	197,864
Massachusetts	2,413,073	30,111	3,011	84,458
Rhode Island	382,557	0	0	13,389
New Hampshire	527,725	0	0	18,470
Maine	612,500	8,000	800	21,438
Vermont	299,543	400	40	10,484
Totals	28,492,755	1,191,678	119,169	997,246

The estimated ethanol demand volume of 119,000,000 gallons represents approximately 9 percent of the total United States ethanol production capacity. The importance of this ethanol demand figure is that it demonstrates that there is ethanol fuel blend marketing infrastructure across much of the model marketing area. Furthermore, the New Bern ethanol plant is sized to produce approximately 28,000,000 gallons annually of fuel grade ethanol. This production figure is about 23 percent of the estimated present ethanol demand volume of 119,000,000 gallons, indicating that ethanol produced at the New Bern plant likely can be readily absorbed in the model marketing area.

Also listed in the Table 6-5 is an estimate of the level of ethanol demand with RFG. This ethanol demand sensitivity assumes that approximately one-third of the total gasoline demand in the marketing area is RFG, and that RFG requirements are met exclusively with gasoline/ethanol blends. The purpose of this demand sensitivity is discussed in a later section dealing with New Bern ethanol market penetration.

New Bern Ethanol Transportation Cost Model

For each of the states listed in the New Bern ethanol plant model marketing area, a single city or region within the state was arbitrarily assigned as the "centroid" of the state's ethanol demand. The distance from the New Bern ethanol plant for each of these ethanol demand "centroids" is listed in Table 6, below. Also listed is the approximate railroad freight cost from New Bern to the demand "centroid."

Table 6-6: New Bern Ethanol Transportation Cost Model

State	Arbitrary Demand Centroid	Approximate Distance from New Bern, miles	Approximate Freight to Market, Cents/gallon
North Carolina	Raleigh/Durham	129	0.031
Virginia	Richmond	448	0.054
Washington, DC	Washington	498	0.058
Maryland	Baltimore	538	0.066
Delaware	Wilmington	605	0.075
Pennsylvania	Philadelphia	637	0.075
New Jersey	Trenton	669	0.078
Connecticut	Hartford	1,097	0.122
New York	New York	1,103	0.122
Massachusetts	Boston	1,169	0.125
Rhode Island	Providence	1,171	0.128
New Hampshire	Portsmouth	1,226	0.130
Maine	Portland	1,276	0.135
Vermont	Montpelier	1,293	0.137

Railroad freight costs were determined using a transportation model which assumes the use of 30,000 gallon railroad tank cars [4]. The model includes both a tank car cost element and a mileage cost element. As Table 6-6 shows, ethanol freight costs across the model marketing area may range from approximately 3 to 14 cents per gallon of ethanol. Ethanol truck transportation costs can be examined in a future study.

The above three marketing area, ethanol demand, and transportation costs models are combined in Table 6-7, the New Bern Biomass to Ethanol Plant Marketing Model.

New Bern Ethanol Plant Market Penetration

Included in the New Bern Biomass to Ethanol Plant Marketing Model, Table 6-7, are three sensitivities of the New Bern plant's ethanol market penetration. The first market penetration sensitivity assumes ethanol at the plant will capture 100 percent market share up to a total of 28,000,000 gallons, the plant's annual manufacturing output. At the present model marketing area ethanol demand level of 119,000,000 gallons, the ethanol produced at the New Bern plant can meet 100 percent of the volumetric ethanol demand within 600 miles north of New Bern. The single largest supply volume meets the demand of the "centroid" designated as Richmond, Virginia, which is 450 miles north of New Bern. Freight costs in this demand scenario, range from 3 to 7 cents per gallon.

The second market penetration sensitivity assumes that ethanol produced at the New Bern plant will capture no more than 24 percent of the present ethanol demand. Under this scenario, ethanol is transported up to 1300 miles from New Bern. The bulk of the ethanol is marketed in the Richmond, Philadelphia, and New York "centroids". Freight costs for the bulk of the ethanol range from 3 to 12 cents per gallon.

Table 6-7: New Bern Biomass to Ethanol Plant Marketing Model

New Bern Biomass to Ethanol Plant Market Model												
State	Arbitrary Demand Centroid	Approx. Miles From New Bern	Approx. Freight to Market	000 Gallons / Year								
				Fuel Demand		Ethanol Demand				New Bern Ethanol Market Penetration		
				Gasoline	Ethanol Blends	Estimated Present	Sensitivity w/RFG	at 23.5% Present	at 5.0% w/RFG	100% Present	23.5% Present	5.0% w/RFG
North Carolina	Raleigh/Durham	129	0.031	3,371,311	25,689	2,569	117,996	604	5,900	2,569	604	5,900
Virginia	Richmond	448	0.054	3,093,817	155,691	15,569	108,284	3,658	5,414	15,569	3,658	5,414
Dist. of Columbia	Washington	498	0.058	176,379	10,000	1,000	6,173	235	309	1,000	235	309
Maryland	Baltimore	538	0.066	2,126,585	22,675	2,268	74,430	533	3,722	2,268	533	3,722
Delaware	Wilmington	605	0.075	353,051	25,119	2,512	12,357	590	618	2,512	590	618
Pennsylvania	Philadelphia	637	0.075	4,701,894	400,100	40,010	164,566	9,401	8,228	4,083	9,401	8,228
New Jersey	Trenton	669	0.078	3,369,892	0	0	117,946	0	5,897	0	0	3,810
Connecticut	Hartford	1097	0.122	1,411,172	52,695	5,270	49,391	1,238	2,470	0	1,238	0
New York	New York	1103	0.122	5,653,256	461,198	46,120	197,864	10,836	9,893	0	10,836	0
Massachusetts	Boston	1169	0.125	2,413,073	30,111	3,011	84,458	707	4,223	0	707	0
Rhode Island	Providence	1171	0.128	382,557	0	0	13,389	0	669	0	0	0
New Hampshire	Portsmouth	1226	0.130	527,725	0	0	18,470	0	924	0	0	0
Maine	Portland	1276	0.135	612,500	8,000	800	21,438	188	1,072	0	188	0
Vermont	Montpelier	1293	0.137	299,543	400	40	10,484	9	524	0	9	0
Totals				28,492,755	1,191,678	119,168	997,246	28,000	49,862	28,000	28,000	28,000

The third market penetration sensitivity assumes ethanol is blended into all RFG fuels and that ethanol produced at the New Bern plant captures 5 percent of this market in each demand "centroid". Under this scenario, ethanol is transported up to 669 miles from New Bern. Freight costs range from 3 to 8 cents per gallon.

Moving New Bern Ethanol to Market - General Approach

New Bern Ethanol Storage and Transport Rationale

Ethanol storage at the New Bern facility is sized to accommodate approximately 10 day's ethanol production of about 750,000 gallons (18,000 barrels). This capacity level ensures there is sufficient tankage to accommodate periodic loading cycle delays [4]. It further ensures that loading delays will not cause a reduction in the plant's daily product output.

Rail is the likely method of ethanol transport [4]. The New Bern site has an existing rail spur which can be modified to accommodate the loading of two to three 30,000 gallon rail tank cars daily. Rail maps show two short lines serve the New Bern area. These tie into the CSX and Norfolk and Southern railroads, which in turn feed into Conrail and others further north along the East Coast. As discussed earlier, the ethanol marketing area assumed for this study now receives 119,000,000 gallons, annually. Therefore, it can be assumed that there is sufficient rail transport and receiving infrastructure to move ethanol from the New Bern site to blending terminals. A more detailed infrastructure analysis is required, but it is beyond the scope of this study.

Although it is anticipated that most of the product ethanol will be freighted by rail, it is likely that small quantities will be supplied by truck to blending terminals within 100 miles of New Bern. Therefore, a truck loading rack is included in the plant's design. Because only a relatively small portion of ethanol product is anticipated to move within 100 miles of New Bern, the transportation cost model discussed earlier is based solely on rail transport to the more distant receiving locations.

Weyerhaeuser's New Bern mill site has barge docking facilities which are presently used to receive fuel oil. However, given the complexity of determining which blending terminals can receive barge quantities of fuel ethanol, this transport option was not examined further in this study. Future studies can address this transport option more closely.

Marketing Logistics

Today, most fuel ethanol is blended into gasoline motor fuel by motor fuel marketers at their distribution terminals. This terminal blending technique ensures product quality of the gasoline/ethanol blends prior to their shipment to retail stations. Other than the very small quantities used as a denaturant, it is not necessary for a fuel ethanol producer to blend the ethanol with gasoline at the ethanol manufacturing site. Thus, to market fuel ethanol, it is necessary only to ship the ethanol from its manufacturing site to a gasoline blending and distribution terminal. The ethanol producer can ship the ethanol to the distribution terminal for sale on a delivered, or CIF, basis to the motor fuel distributor. Alternatively, the ethanol producer can sell the ethanol product at the manufacturing site, FOB, where it is loaded into distributor-provided tank cars.

Midwest-produced ethanol is marketed today in the same market the New Bern ethanol plant is envisioned to serve [1,4]. The implication is that there is an existing commercial distribution network in place, obviating the need to establish ethanol distribution infrastructure.

For the scope of this study, it is assumed that contract sales and/or trades of ethanol from New Bern likely can be executed by existing, experienced industry oxygenate traders, perhaps through mutually agreeable service arrangements. An extensive listing of motor fuel oxygenate contacts appears in reference [2].

Fuel Ethanol Market Price History

The degree of market penetration of ethanol produced at the New Bern site is largely one of economics. Competing products include ethanol produced from existing plants and other oxygenates such as MTBE, ETBE, and TAME.

A review of ethanol price history from 1992 through 1994 listed in Table 6-8 shows ethanol prices for selected markets ranging from a minimum of $0.94 per gallon to a maximum of $1.45 per gallon [6]. The average price in the sample was per gallon with a standard deviation of $0.09 per gallon. A detailed listing of the fuel ethanol prices for these selected markets is shown in Tables 6-9, 6-10, and 6-11, for 1992, 1993, and 1994, respectively.

Table 6-8: Summary of Selected Historical Fuel Ethanol Prices (1992 - 1994)

	Richmond, VA	Pekin, IL	Indianapolis, IN	Upstate, NY	South Point, OH	Nashville, TN	Sample
Average	$1.18	$1.17	$1.14	$1.20	$1.19	$1.16	$1.17
Maximum	$1.38	$1.38	$1.35	$1.45	$1.40	$1.38	$1.45
Minimum	$1.00	$0.97	$0.94	$1.00	$1.03	$0.96	$0.94
Std Dev	$0.08	$0.09	$0.09	$0.09	$0.09	$0.09	$0.09
Median	$1.18	$1.16	$1.13	$1.19	$1.16	$1.15	$1.16
Mode	$1.12	$1.15	$1.13	$1.15	$1.15	$1.15	$1.15

Fuel ethanol produced at the New Bern facility likely will sell into the market at these price levels, adjusted for transport costs. The low price in the range likely is representative of the cash costs for competing conventional ethanol plants. Likewise, the high price in the range likely is representative of the "switching" price, or the price at which consumers switch to oxygenate alternatives. To the extent that ethanol did not capture 100 percent of the oxygenate requirements of the selected markets, the selected ethanol price history likely reflects the price of competing oxygenates.

Ethanol Credits

The historical market prices quoted here do not include the federal fuel ethanol credit because this credit accrues to the ethanol blender, not the ethanol manufacturer. Blenders purchasing ethanol produced at the New Bern facility would be eligible for the federal credit [4].

The state of North Carolina provides for a income tax credit up to 30 percent of the fuel ethanol plant's cost [5]. This credit consists of two components. The first is a tax credit up to 20 percent of the plant's installation and construction costs. The second component provides an additional 10 percent tax credit for the construction of new fuel ethanol plants using forestry products as feedstocks. The value of these credits on ethanol production cost is discussed in Section 4.

6.3 New Bern BGCC Plant Ownership Options

The technical and economic assessments which have been performed for the New Bern BGCC plant have confirmed that the technology has the potential to improve the efficiencies of both forest and plant operations. Although there are projected economic gains from the use of BGCC, it is apparent that special consideration must be given to identifying the most effective plant design and site to assure that the technology is demonstrated in a manner that will achieve its promise with acceptable economic risk. While the New Bern mill offers an excellent site to achieve the technical objectives, market and other business considerations in the New Bern area dictate that ownership arrangements must be reviewed to establish a risk management plan which supports the BGCC commercialization effort with acceptable risk.

Table 6-9: 1992 Ethanol Prices for Selected Markets [6]

DATE	Richmond, VA	Pekin, IL	Indianapolis, IN	Upstate, NY	South Point, OH	Nashville, TN
1/6/92	$1.13	$1.16	$1.13	$1.15	$1.15	$1.15
1/13/92	$1.16	$1.15	$1.12	$1.14	$1.13	$1.14
1/20/92	$1.15	$1.13	$1.11	$1.12	$1.11	$1.13
1/27/92	$1.17	$1.15	$1.15	$1.14	$1.13	$1.15
2/3/92	$1.17	$1.15	$1.13	$1.13	$1.14	$1.12
2/10/92	$1.16	$1.14	$1.11	$1.13	$1.15	$1.11
2/17/92	$1.21	$1.18	$1.15	$1.16	$1.19	$1.15
2/24/92	$1.18	$1.16	$1.13	$1.15	$1.17	$1.13
3/2/92	$1.19	$1.16	$1.12	$1.18	$1.19	$1.14
3/9/92	$1.19	$1.16	$1.13	$1.20	$1.22	$1.14
3/16/92	$1.18	$1.15	$1.12	$1.19	$1.22	$1.14
3/23/92	$1.19	$1.17	$1.13	$1.19	$1.23	$1.16
3/30/92	$1.19	$1.17	$1.13	$1.20	$1.23	$1.17
4/6/92	$1.22	$1.21	$1.18	$1.22	$1.26	$1.21
4/13/92	$1.21	$1.21	$1.18	$1.21	$1.27	$1.21
4/20/92	$1.22	$1.21	$1.19	$1.21	$1.28	$1.21
4/27/92	$1.23	$1.23	$1.20	$1.22	$1.30	$1.22
5/4/92	$1.23	$1.24	$1.20	$1.22	$1.30	$1.22
5/11/92	$1.23	$1.24	$1.20	$1.22	$1.30	$1.22
5/18/92	$1.25	$1.26	$1.22	$1.24	$1.34	$1.23
5/25/92	$1.25	$1.26	$1.23	$1.26	$1.35	$1.23
6/1/92	$1.25	$1.26	$1.23	$1.26	$1.35	$1.23
6/8/92	$1.26	$1.26	$1.24	$1.27	$1.37	$1.24
6/15/92	$1.25	$1.26	$1.24	$1.27	$1.35	$1.24
6/22/92	$1.25	$1.25	$1.23	$1.26	$1.34	$1.24
6/29/92	$1.25	$1.25	$1.23	$1.26	$1.34	$1.24
7/6/92	$1.24	$1.25	$1.21	$1.25	$1.32	$1.22
7/13/92	$1.24	$1.25	$1.21	$1.25	$1.32	$1.22
7/20/92	$1.25	$1.27	$1.24	$1.27	$1.32	$1.26
7/27/92	$1.29	$1.29	$1.27	$1.30	$1.34	$1.28
8/3/92	$1.31	$1.30	$1.28	$1.32	$1.35	$1.29
8/10/92	$1.31	$1.30	$1.26	$1.31	$1.35	$1.29
8/17/92	$1.31	$1.30	$1.26	$1.31	$1.35	$1.29
8/24/92	$1.31	$1.31	$1.28	$1.32	$1.35	$1.30
8/31/92	$1.31	$1.31	$1.28	$1.32	$1.35	$1.30
9/7/92	$1.32	$1.32	$1.29	$1.33	$1.35	$1.31
9/14/92	$1.32	$1.32	$1.29	$1.33	$1.35	$1.30
9/21/92	$1.31	$1.32	$1.29	$1.33	$1.34	$1.30
9/28/92	$1.33	$1.32	$1.30	$1.34	$1.34	$1.31
10/5/92	$1.33	$1.32	$1.30	$1.34	$1.34	$1.31
10/12/92	$1.33	$1.34	$1.31	$1.36	$1.35	$1.32
10/19/92	$1.35	$1.35	$1.33	$1.38	$1.35	$1.34
10/26/92	$1.36	$1.37	$1.34	$1.40	$1.35	$1.35
11/2/92	$1.38	$1.38	$1.35	$1.45	$1.40	$1.38
11/9/92	$1.38	$1.38	$1.35	$1.45	$1.40	$1.38
11/16/92	$1.32	$1.31	$1.28	$1.38	$1.29	$1.29
11/23/92	$1.32	$1.31	$1.28	$1.37	$1.29	$1.29
11/30/92	$1.26	$1.28	$1.26	$1.35	$1.25	$1.26

DATE	Richmond, VA	Pekin, IL	Indianapolis, IN	Upstate, NY	South Point, OH	Nashville, TN
12/7/92	$1.30	$1.25	$1.25	$1.34	$1.24	$1.23
12/14/92	$1.28	$1.23	$1.28	$1.31	$1.16	$1.21
12/21/92	$1.28	$1.22	$1.27	$1.31	$1.16	$1.20
12/28/92	$1.27	$1.22	$1.23	$1.30	$1.16	$1.20

Table 6-10: 1993 Ethanol Prices for Selected Markets [6]

DATE	Richmond, VA	Pekin, IL	Indianapolis, IN	Upstate, NY	South Point, OH	Nashville, TN
1/11/93	$1.21	$1.19	$1.17	$1.26	$1.14	$1.17
1/18/93	$1.18	$1.17	$1.15	$1.24	$1.13	$1.15
1/25/93	$1.16	$1.15	$1.13	$1.22	$1.13	$1.14
2/1/93	$1.15	$1.13	$1.12	$1.21	$1.12	$1.12
2/8/93	$1.15	$1.13	$1.12	$1.22	$1.16	$1.14
2/15/93	$1.15	$1.13	$1.12	$1.21	$1.15	$1.14
2/22/93	$1.14	$1.13	$1.10	$1.19	$1.09	$1.13
3/1/93	$1.13	$1.11	$1.08	$1.16	$1.09	$1.11
3/8/93	$1.12	$1.10	$1.07	$1.15	$1.09	$1.10
3/15/93	$1.16	$1.14	$1.10	$1.17	$1.16	$1.12
3/22/93	$1.16	$1.15	$1.11	$1.18	$1.16	$1.13
3/29/93	$1.16	$1.13	$1.08	$1.16	$1.13	$1.11
4/5/93	$1.17	$1.14	$1.09	$1.18	$1.14	$1.13
4/12/93	$1.15	$1.13	$1.09	$1.16	$1.13	$1.12
4/19/93	$1.17	$1.14	$1.11	$1.17	$1.14	$1.15
4/26/93	$1.18	$1.15	$1.12	$1.17	$1.14	$1.15
5/3/93	$1.20	$1.16	$1.13	$1.19	$1.16	$1.16
5/10/93	$1.21	$1.17	$1.14	$1.21	$1.16	$1.16
5/17/93	$1.21	$1.17	$1.14	$1.22	$1.19	$1.16
5/24/93	$1.22	$1.17	$1.15	$1.23	$1.19	$1.16
5/31/93	$1.22	$1.17	$1.15	$1.23	$1.19	$1.16
6/7/93	$1.22	$1.18	$1.15	$1.24	$1.19	$1.16
6/14/93	$1.22	$1.17	$1.14	$1.25	$1.18	$1.16
6/21/93	$1.21	$1.16	$1.13	$1.20	$1.16	$1.14
7/12/93	$1.15	$1.16	$1.08	$1.14	$1.10	$1.09
7/19/93	$1.13	$1.14	$1.05	$1.14	$1.07	$1.08
7/26/93	$1.12	$1.13	$1.05	$1.14	$1.06	$1.08
8/2/93	$1.10	$1.10	$1.04	$1.12	$1.05	$1.06
8/9/93	$1.10	$1.10	$1.04	$1.12	$1.05	$1.06
8/16/93	$1.12	$1.09	$1.07	$1.14	$1.09	$1.07
8/23/93	$1.12	$1.09	$1.08	$1.14	$1.10	$1.08
8/30/93	$1.13	$1.09	$1.09	$1.15	$1.11	$1.10
9/6/93	$1.13	$1.09	$1.09	$1.15	$1.11	$1.10
9/13/93	$1.11	$1.07	$1.07	$1.14	$1.09	$1.08
9/20/93	$1.10	$1.07	$1.05	$1.11	$1.08	$1.07
9/27/93	$1.10	$1.07	$1.05	$1.10	$1.08	$1.07
10/4/93	$1.10	$1.07	$1.06	$1.12	$1.08	$1.07
10/11/93	$1.12	$1.09	$1.08	$1.14	$1.11	$1.09
10/18/93	$1.12	$1.10	$1.08	$1.14	$1.12	$1.09
10/25/93	$1.05	$1.09	$1.06	$1.13	$1.08	$1.07
11/1/93	$1.08	$1.08	$1.06	$1.11	$1.05	$1.05
11/8/93	$1.07	$1.07	$1.05	$1.10	$1.04	$1.04

DATE	Richmond, VA	Pekin, IL	Indianapolis, IN	Upstate, NY	South Point, OH	Nashville, TN
11/15/93	$1.05	$1.04	$1.03	$1.08	$1.03	$1.03
11/22/93	$1.05	$1.03	$1.01	$1.05	$1.03	$1.03
11/29/93	$1.05	$1.02	$0.99	$1.05	$1.03	$1.03
12/6/93	$1.05	$1.02	$0.98	$1.04	$1.12	$1.02
12/13/93	$1.01	$1.00	$0.96	$1.01	$1.15	$0.98
12/20/93	$1.00	$0.97	$0.94	$1.00	$1.13	$0.96
12/27/93	$1.00	$0.97	$0.94	$1.00	$1.13	$0.96

Table 6-11: 1994 Ethanol Prices for Selected Markets [6]

DATE	Richmond, VA	Pekin, IL	Indianapolis, IN	Upstate, NY	South Point, OH	Nashville, TN
1/10/94	$1.00	$0.98	$0.96	$1.04	$1.15	$0.99
1/24/94	$1.05	$1.04	$1.01	$1.08	$1.15	$1.03
1/31/94	$1.07	$1.07	$1.03	$1.11	$1.05	$1.04
2/7/94	$1.12	$1.12	$1.09	$1.14	$1.15	$1.09
2/14/94	$1.12	$1.12	$1.08	$1.14	$1.14	$1.09
2/21/94	$1.13	$1.12		$1.15	$1.15	$1.10
2/28/94	$1.13	$1.12	$1.10	$1.15	$1.15	$1.10
3/7/94	$1.13	$1.11	$1.09	$1.15	$1.15	$1.09
3/14/94	$1.10	$1.10	$1.06	$1.12	$1.13	$1.07
3/21/94	$1.11	$1.10	$1.06	$1.13	$1.14	$1.08
3/28/94	$1.12	$1.09	$1.06	$1.13	$1.14	$1.08
4/4/94	$1.11	$1.09	$1.06	$1.12	$1.14	$1.07
4/11/94	$1.11	$1.10	$1.07	$1.13	$1.15	$1.08
4/18/94	$1.10	$1.09	$1.06	$1.11	$1.15	$1.07
4/25/94	$1.09	$1.08	$1.05	$1.11	$1.15	$1.06
5/2/94	$1.09	$1.10	$1.06	$1.13	$1.15	$1.07
5/9/94	$1.09	$1.11	$1.06	$1.15	$1.15	$1.07
5/16/94	$1.10	$1.11	$1.07	$1.15	$1.15	$1.08
5/23/94	$1.12	$1.11	$1.08	$1.15	$1.15	$1.09
5/30/94	$1.14	$1.12	$1.09	$1.15	$1.11	$1.11
6/6/94	$1.16	$1.13	$1.13	$1.16	$1.15	$1.12
6/13/94	$1.15	$1.12	$1.10	$1.15	$1.15	$1.12
6/20/94	$1.17	$1.15	$1.12	$1.15	$1.15	$1.13
6/27/94	$1.17	$1.15	$1.12	$1.15	$1.15	$1.13
7/4/94	$1.18	$1.16	$1.13	$1.16	$1.18	$1.15
7/11/94	$1.18	$1.16	$1.13	$1.16	$1.18	$1.15
7/18/94	$1.20	$1.18	$1.15	$1.20	$1.21	$1.17
7/25/94	$1.20	$1.20	$1.16	$1.21	$1.22	$1.18
8/1/94	$1.21	$1.22	$1.18	$1.22	$1.24	$1.19
8/8/94	$1.25	$1.25	$1.20	$1.25	$1.26	$1.22
8/15/94	$1.26	$1.25	$1.21	$1.25	$1.26	$1.22
8/22/94	$1.23	$1.23	$1.19	$1.25	$1.26	$1.20
8/29/94	$1.20	$1.20	$1.15	$1.22	$1.22	$1.16
9/12/94	$1.23	$1.22	$1.19	$1.25	$1.25	$1.20
9/19/94	$1.20	$1.20	$1.15	$1.25	$1.25	$1.18
9/26/94	$1.20	$1.21	$1.15	$1.25	$1.25	$1.18
10/3/94	$1.18	$1.17	$1.11	$1.25	$1.22	$1.15
10/10/94	$1.17	$1.15	$1.09	$1.25	$1.23	$1.15
10/17/94	$1.20	$1.18	$1.11	$1.30	$1.24	$1.18
10/24/94	$1.21	$1.19	$1.11	$1.30	$1.25	$1.18
10/31/94	$1.22	$1.20	$1.12	$1.30	$1.26	$1.19
11/7/94	$1.22	$1.19	$1.11	$1.30	$1.25	$1.19
11/14/94	$1.24	$1.19	$1.13	$1.30	$1.24	$1.19

The original plan was for Weyerhaeuser to be the sole owner. Under this arrangement, a power sales agreement for the plant life would have to be negotiated with Carolina Power & Light or some other power purchaser. With the CP&L position of valuing the power at its calculated avoided cost with no need for base load power until the middle of the next decade, the project is not economically attractive. However, the New Bern BGCC project could be the basis of a response to the regional Rural Electric Authority (REA) which has announced its intention to solicit bids for replacement of 600 MW of base load power which it currently purchases from CP&L. A larger, more efficient BGCC plant based on a General Electric 6FA gas turbine with export power of about 100 MW would satisfy a portion of that load, and could match well with other bids likely to be based on gas fired combined cycles nominally 250 MW in size. The BGCC plant would represent supply diversity and, assuming DOE support, would have roughly comparable costs. This REA initiative further complicates the supply issue since it would result in even more CP&L capacity becoming available and CP&L may choose to negate the initiative by reducing electricity costs.

Nonetheless, the REA could decide to be a partner in the New Bern BGCC plant. It has determined that an alternate source of power is needed. It has a vested interest in the local communities, access to low cost money, and a need to support competitive power. This response to increasing energy costs is of concern to power companies and regulatory groups because of the potential to lead to stranded investment in utility capacity. An obvious outcome could be negotiated rate settlements at the Utility Commission level as a less costly solution to the general rate payer.

If the BGCC plant were designed to meet only the mill power and steam needs, the technology would not be portrayed in its best economic light but such an approach could serve the purpose of technology demonstration. Due to the smaller size equipment, power efficiency gain would be minimal and unit costs would be high. More cost-effective solutions to mill needs using conventional technologies may be available at lower risk. Establishing the plant as an industry owned facility as a means of commercial scale demonstration of BGCC technology benefits may be achievable because the industry has an interest in improving power system efficiencies. The industry would provide some level of cost share and would participate in assessment of the new technology benefits. The risk exposure of Weyerhaeuser would be reduced and the plant would be sized for internal use only, thereby avoiding conflicts with power producers. Although the plant would be too small to fully achieve potential efficiency gains, it would provide operating experience and an indication of the performance and reliability achieved by the BGCC power system design.

The range of support for such a demonstration could be broadened to incorporate the local and state communities. Weyerhaeuser, with industry support, could convince the state government and local communities of the value of the technology to the New Bern plant, the economic health of the forest products industry, the potential economic and environmental benefits to the region and the modest cost impact of supporting the demonstration.

References

[1] 1995 United States Fuel Reformulation Map, Hart/IRI Fuels Information Services, 1995.

[2] The World Reformulated Gasoline Directory, Fuel Reformulation, Hart Publications, Inc., July - August, Vol. IV, No. 4, 1994.

[3] Washecheck, D. M., Amoco Petroleum Products Marketing Sector, personal communication, February, 24, 1995.

[4] Shale, J. H., et. al., Amoco Petroleum Products Supply Logistics, personal communication, September 19, 1994.

[5] Clean Fuels Report, J. E. Sinor Consultants, Inc, Vol. 6, No. 2, April, 1994.

[6] Oxy-Fuel News Price Report, Oxy-Fuel News, Hart Publications, Inc., Vols. IV (1992), V (1993), VI (1994).

Section 7

Socioeconomic and Environmental Evaluation

This section presents an overview of the impact of this project on the region with regard to the potential for new employment, industrial expansion, and development of a strengthened rural economy.

Two scenarios were considered for analysis of the direct staffing needs. For the first scenario, the Biomass Gasification Combined Cycle plant proposed in this project, permanent full time employment would increase by 46: to operate the plant 18 people would be added, while 28 people would be added to supply the wood. For the second scenario, the addition of a Biomass to Ethanol plant to the Biomass Gasification Combined Cycle plant, the employment total would increase to 113, comprised of 36 for plant operation and 77 for wood procurement. In addition, direct jobs equivalent to 103 and 258 persons/day, respectively for the two scenarios would be created during the construction phase.

The determination of the impact of these two proposed scenarios on employment in the area was also made using a computer model, "A Method for the Assessment of Site-Specific Economic Impacts of Commercial and Industrial Biomass Energy Facilities," developed by Resource Systems Group, Inc. for the Southeastern Regional Biomass Energy Program administered by the Tennessee Valley Authority. This program uses the feedstock information, capital and operating costs and factors developed for each state to estimate direct and indirect incomes as well as direct and indirect jobs.

Based on this model the number of direct jobs created by the Biomass Gasification Combined Cycle plant would be 129. This total is greater than the 46 determined by the Weyerhaeuser project team. The difference appears to be a result of the method of calculating the direct jobs created by the purpose of wood chips (harvested wood). In the TVA program the tonnage of this wood is factored to determine the number of persons required to harvest the wood. Similarly for the addition of a Biomass to Ethanol plant to the Biomass Gasification Combined Cycle plant the computer program projected 319 direct jobs would be created, which is greater than the project team's projection of 113. Again this difference is associated with the wood harvest. The project team believes its estimates to be more realistic based upon experience. However, this discrepancy needs to be understood and should be addressed if the project goes forward.

Based on the model results, indirect jobs created as a result of these two projects are predicted to be 157 and 811, respectively.

Section 8

Plan for Phase II of the New Bern Project

The information summarized in this report demonstrates the availability of reasonable cost feedstock to support either a BGCC or an ethanol facility in the New Bern region. At ethanol prices of over ~$1.40/gallon or enzyme costs of less than ~$4.00/gallon, the ethanol plant has the potential for attractive economics. However, the current status of development of the ethanol technology precludes commercialization at the scale studied here at this time. Several design issues need to be resolved and the economics revisited before a large scale commercial demonstration can be proposed.

As a result, the most attractive technology to carry forward to commercialization at New Bern or other similar sites is BGCC. The attractiveness of the BGCC technology is significantly impacted by the value of power produced and the capital cost of the plant. Given that likely reductions in capital cost of 20-30 percent are achievable as subsequent facilities are cost engineered and built—and that power values of 5¢/kWh and greater are realizable through power contracts or displacement of purchased power—the results of this study demonstrate that biomass gasification combined cycle technology has significant potential for achieving improved pulp mill operations and biomass utilization efficiency. It also has the potential for developing additional product revenue streams which could enhance forest product industry economic productivity.

For these reasons, Weyerhaeuser has decided to proceed with the next stage of a biomass gasification project. The costs and risk of the first U.S. commercial BGCC system are such that significant cost sharing from the DOE or other sources will be essential to make this step feasible. Given the availability of this cost sharing to establish the commercial viability of BGCC technology, long-range plans for many Weyerhaeuser and industry pulp mills should include biomass gasification and black liquor gasification technology to satisfy energy, process and environmental requirements. Over time, effective use of these technologies will result in improved integration opportunities in pulp mill design and operational needs in addition to possible markets for added energy products that could result from the use of biomass gasification systems.

Weyerhaeuser believes that the advancement of this technology to a commercially-proven status is important to the industry and is consistent with the goals and objectives reviewed with the DOE and documented in the industry's "compact" with DOE which is based on the industry's vision of the future, "Agenda 2020".

For its New Bern mill, Weyerhaeuser has developed a detailed plan for implementing biomass gasification which is consistent with projected mill energy requirements, the technology evaluations presented in this report, technical assessments performed by Weyerhaeuser in parallel with this work, and market conditions prevailing in the New Bern area for biomass, electric power, and other potential products. Figure 8-1 shows the decision tree associated with the BGCC selection process.

The project design which minimizes capital cost and, therefore, risk is the use of an atmospheric pressure gasifier to provide a fuel gas which would displace the oil currently fired in the bark boiler and could also displace oil fired in the mill's lime kiln. This boiler retrofitting project will yield 40 MW of biomass based power capacity through an existing back pressure and new condensing turbine, as well as reducing operating costs by essentially eliminating oil use and power purchase at the mill in the first phase of implementation. In a later phase, as black liquor gasification technology becomes available and power

or liquid fuel values justify, the combined cycle plant will be added and biomass gasification will be expanded.

Specific elements of the project include:

- Retrofitting of the existing 30 MW oil-fired boiler to allow use of fuel gas in place of oil
- Addition of a 10 MW condensing steam turbine
- Fuel gas conversion of the lime kiln
- Upgrade of biomass handling system to support gasifier operation
- Detailed engineering and cost estimates required for funding approvals
- Environmental permitting
- Scheduled construction start January, 1997
- Scheduled initial operation November, 1998

This project design has been determined to be the least costly manner of incorporating biomass gasification technology and its associated benefits into the New Bern mill. Economic risks related to introduction of this new technology into a pulp mill environment will be effectively managed by minimizing capital expenditures. Operational experience and understanding of the best means to integrate a full-scale gasification system into the New Bern mill operations will be achieved by this least costly approach, which will allow for future additional gasifiers which could be used for power or liquid fuel production from biomass available in the New Bern area. Demonstration of this technology at the New Bern mill in this manner provides significant life extension of existing plant facilities, increased use of biomass and plant wastes within the mill, and will confirm that technical requirements for commercial biomass gasification combined cycle power plants can be achieved. As Figure 8-1 shows, the alternatives to a gasification approach utilize fully commercial, low-risk technology. Shared funding will be necessary to offset the higher risk of gasification.

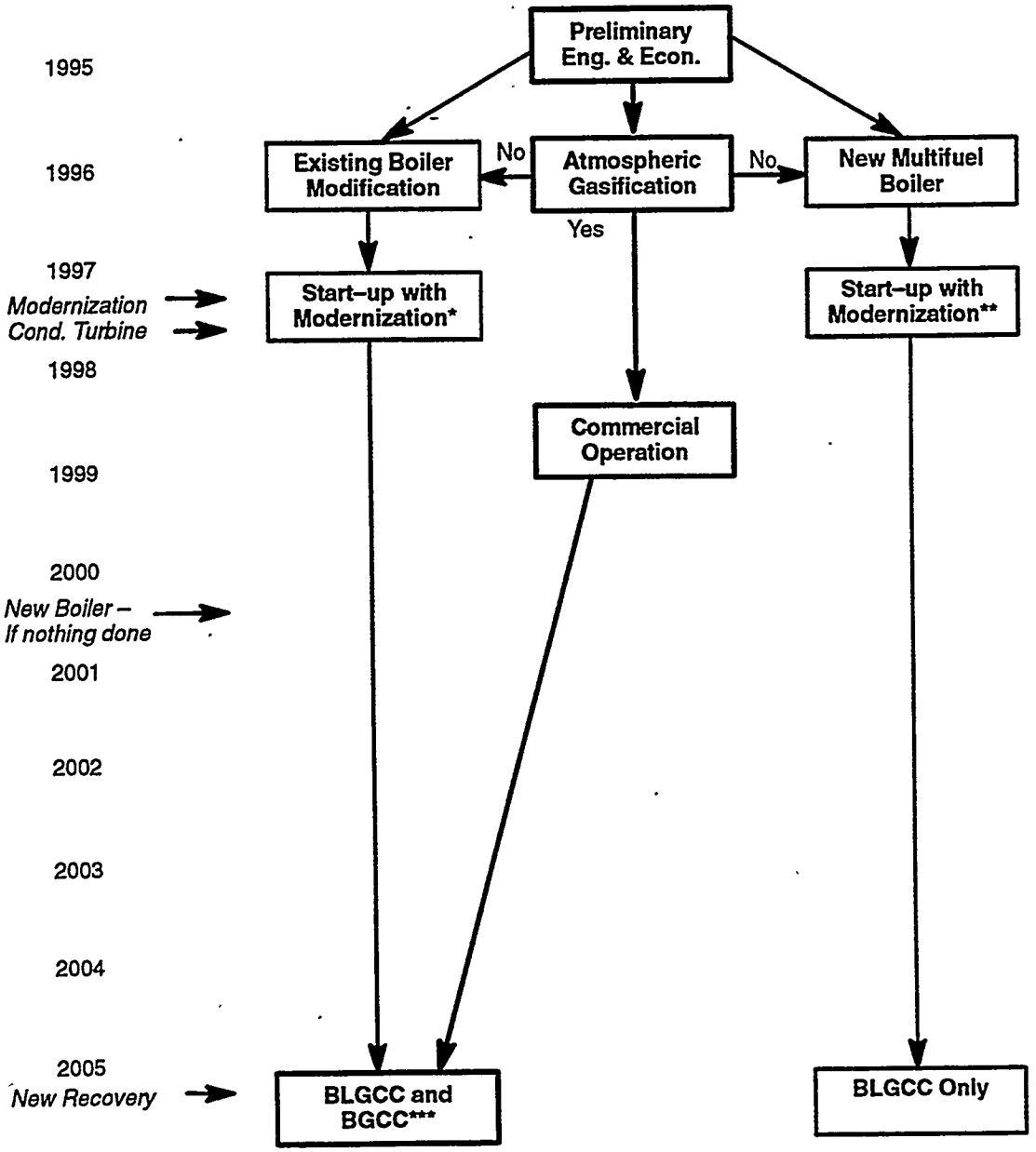

* Requires 40% oil
** Assumes bubbling or recirculating fluid bed
*** BGCC expansion depends on power contract

Figure 8-1: Power Island Alternatives for a Sustained Competitive Future with Government Funding

REPORT DOCUMENTATION PAGE

Form Approved
ORB NO. 0704-0188

Public reporting burden for this collection of information is estimated to average 1 hour per response, including the time for reviewing instructions, searching existing data sources, gathering and maintaining the data needed, and completing and reviewing the collection of information. Send comments regarding this burden estimate or any other aspect of this collection of information, including suggestions for reducing this burden, to Washington Headquarters Services, Directorate for Information Operations and Reports, 1215 Jefferson Davis Highway, Suite 1204, Arlington, VA 22202-4302, and to the Office of Management and Budget, Paperwork Reduction Project (0704-0188), Washington, DC 20503.

1. AGENCY USE ONLY (Leave blank)	2. REPORT DATE	3. REPORT TYPE AND DATES COVERED
	October 1995	Subcontract Report

4. TITLE AND SUBTITLE

New Bern Biomass to Energy Poject Phase I: Feasibility Study

5. FUNDING NUMBERS

(C) CAE-3-13383-01
(TA) BF521002

6. AUTHOR(S)

Stone & Webster, Weyerhauser, Amoco, and Carolina Power & Light

7. PERFORMING ORGANIZATION NAME(S) AND ADDRESS(ES)

Same as 6

8. PERFORMING ORGANIZATION REPORT NUMBER

NA

9. SPONSORING/MONITORING AGENCY NAME(S) AND ADDRESS(ES)

National Renewable Energy Laboratory
1617 Cole Boulevard
Golden, CO 80401-3393

10. SPONSORING/MONITORING AGENCY REPORT NUMBER

NREL/TP-421-7942

11. SUPPLEMENTARY NOTES

12a. DISTRIBUTION/AVAILABILITY STATEMENT

National Technical Information Service
U.S. Department of Commerce
5285 Port Royal Road
Springfield, VA 22161

12b. DISTRIBUTION CODE

UC-1503

13. ABSTRACT *(Maximum 200 words)*

The concept of this project is to define a specific dedicated feedstock supply system for serving an advanced biomass-to-energy conversion process located at Weyerhauser's market pulp mill in New Bern, North Carolina. It is a feasibility study of the capital cost, operating economics, and regional impact of two technologies: biomass gasification combined cycle and biomass to ethanol.

14. SUBJECT TERMS

biomass, dedicated feedstock supply system, gasification

15. NUMBER OF PAGES
200

16. PRICE CODE

17. SECURITY CLASSIFICATION OF REPORT	18. SECURITY CLASSIFICATION OF THIS PAGE	19. SECURITY CLASSIFICATION OF ABSTRACT	20. LIMITATION OF ABSTRACT